61909.

Volume 11.

TRANSCRIPT OF RECORD.

SUPREME COURT OF THE UNITED STATES.

OCTOBER TERM, 1907.

No. 202.

CONTINENTAL PAPER BAG COMPANY, PETITIONER,

vs.

EASTERN PAPER BAG COMPANY.

ON WRIT OF CERTIORARI TO THE UNITED STATES CIRCUIT COURT OF APPEALS FOR THE FIRST CIRCUIT.

PETITION FOR CERTIORARI FILED JANUARY 10, 1907.
CERTIORARI AND RETURN FILED MARCH 30, 1907.

(20,533)

925

UNITED STATES CIRCUIT COURT,

FOR THE DISTRICT OF MAINE.

EASTERN PAPER BAG COMPANY

VS.

CONTINENTAL PAPER BAG COMPANY

DEFENDANT'S RECORD.

VOLUME 1.

ALBERT H. WALKER,
ATTORNEY.

INDEX TO VOLUME I.

DOCUMENT.	PAGE.
Defendant's answer	1
Amendment to defendant's answer	525
Stipulation	837
Defendant's title papers	520
Walker opinion	469
List of paper bag machine patents for the years 1880 to 1896 inclusive	484
Amended draft of Liddell affidavit	763
Coburn-Liddell letter of December 9, 1899	771
Coburn-Liddell letter of November 15, 1901	772
Coburn-Liddell letter of November 13, 1902	773
Coburn-Liddell letter of November 20, 1902	774
Liddell-Coburn letter, replying to Coburn-Liddell letter of November 20, 1902	775
Liddell contract of November 14, 1901	771
Liddell contract of December 29, 1902	775
Elsas Exhibit No. 1	490
Elsas Exhibit No. 2	496
Elsas Exhibit No. 3	506
Elsas Exhibit No. 4	507
Elsas Exhibit No. 5	509
Elsas Exhibit No. 6	510
Elsas Exhibit No. 7	511
Elsas Exhibit No. 8	513
Elsas Exhibit No. 9	515
Elsas Exhibit No. 10	515
Elsas Exhibit No. 11	518

(*Index to Depositons on next page.*)

938

DEPOSITIONS.

	PAGE.
Claussen's deposition	7
Cooke's deposition	881
Des Jardin's deposition	372
Drury's deposition	904
Elsas' deposition	408
Fisher's deposition	399
Honiss' deposition	355
King's first deposition	157
King's second deposition	777
Liddell's first deposition	527
Liddell's second deposition	886
Lorenz' deposition	134
Stone's first deposition	181
Stone's second deposition	802
Stone's third deposition	842

United States Circuit Court,

FOR THE DISTRICT OF MAINE.

EASTERN PAPER BAG COMPANY,

vs.

CONTINENTAL PAPER BAG COMPANY.

Defendant's Answer.

The defendant, for answer to the Bill of Complaint of the complainant, answering, says:

The defendant admits that the complainant is a corporation duly organized and existing under the laws of Connecticut; and that the defendant is a corporation duly organized and existing under the laws of Maine.

The defendant admits that letters patent of the United States No. 558,969, on a paper bag machine, were granted to the complainant as assignor of William Liddell, April 28, 1896.

The defendant says, on information and belief, that said letters patent No. 558,969, are void for want of invention in view of the prior art; which prior art includes the following prior letters patent of the United States of America:

No. 242,661, granted to Clarence A. Wolle, June 7, 1881.

940

No. 327,280, granted to Felix W. Leinbach and Clarence A. Wolle, September 29, 1885.

No. 331,722, granted on the invention of William A. Lorenz and William H. Honiss, December 1, 1885.

No. 333,647, granted on the invention of William A. Lorenz and William H. Honiss, January 5, 1886.

No. 337,964, granted on the invention of William A. Lorenz and William H. Honiss, March 16, 1886.

No. 337,965, granted on the invention of William A. Lorenz and William H. Honiss, March 16, 1886.

No. 337,966, granted on the invention of William A. Lorenz and William H. Honiss, March 16, 1886.

No. 361,951, granted on the invention of William A. Lorenz and William H. Honiss, April 26, 1887.

No. 374,309, granted on the invention of William A. Lorenz and William H. Honiss, December 6, 1887.

No. 374,345, granted on the invention of Edward E. Claussen, December 6, 1887.

No. 374,361, granted on the invention of William H. Honiss, December 6, 1887.

No. 377,314, granted on the invention of William A. Lorenz and William H. Honiss, January 31, 1888.

No. 407,794, granted on the invention of Charles B. Stilwell, July 30, 1889.

No. 410,841, granted on the invention of William A. Lorenz and Edward E. Claussen, September 10, 1889.

No. 410,842, granted on the invention of William A. Lorenz and William H. Honiss, September 10, 1889

No. 418,201, granted on the invention of William A. Lorenz, December 31, 1889.

No. 444,727, granted on the invention of Edward E. Claussen, January, 13, 1891.

No. 444,728, granted on the invention of William A. Lorenz, January 13, 1891.

No. 444,729, granted on the invention of William A. Lorenz and Edward E. Claussen, January 13, 1891.

No. 459,445, granted on the invention of William A. Lorenz and Edward E. Claussen, September 15, 1891.

No. 517,617, granted on the invention of William A. Lorenz, April 3, 1894.

No. 519,916, granted on the invention of William A. Lorenz and Edward E. Claussen, May 15, 1894.

No. 534,512, granted on the invention of William A. Lorenz and Edward E. Claussen, February 19, 1895.

The defendant does not know whether the complainant ever put into use anything which is described and claimed in said Liddell patent, No. 558,969.

The defendant does not know whether the complainant, ever since the date of the said Liddell patent, No. 558,969, has been and now is the owner thereof; and the defendant does not know whether the complainant, at the time the bill of complaint was filed, was entitled to all the rights secured by said letters patent; and the defendant does not know whether the complainant is now the owner of said letters patent or of any interest therein.

The defendant denies, on information and belief, that the alleged inventions which are described and claimed in said Liddell letters patent, No. 558,969, are of very great utility; and likewise denies that they have been extensively introduced into public use; and likewise denies that the public have generally acknowledged and acquiesced in the complainant's alleged exclusive rights to the same; or in the alleged validity of said patent; or in any claim that any alleged invention covered thereby is of great utility.

The defendant denies, on information and belief, that the complainant has been for years engaged in manufacturing and introducing to the public, machines containing and employing the alleged inventions claimed by said Liddell patent, No. 558,969; and likewise denies that the complainant has spent any considerable sum of money in any such manufac[illegible]re or introduction.

The defendant positively and emphatically denies that it has made, sold or used, or caused to be made, sold or used, or threatened to make, sell or use, anywhere, any paper-bag machine containing, embodying or employing any invention, improvement or "discovery" which is claimed in said Liddell letters patent, No. 558,969; and likewise denies that it has infringed or prepared or proposed to infringe said letters patent in any way; and likewise denies that it has derived or received any gain or profit from any infringement of said letters patent.

The defendant says, on information and belief, that the said Liddell letters patent, No. 558,969, are void for want of utility, because no machine constructed in conformity to said letters patent, can perform any useful function in the manufacture of paper bags, or any other useful function; and because on the contrary, such machine would spoil whatever material might be delivered to it for that purpose or for any other purpose; and because no mechanic of ordinary skill in the art of paper bag machinery, could make a paper bag machine with the aid of the specification and drawing of the said Liddell letters patent, No. 558,969, and make that machine work usefully. Indeed the specification and drawing of the said Liddell letters patent, No. 558,969, are crude, fragmentary and incomplete to such an extent as to indicate that neither Mr. Liddell nor his attorney, Mr. Hunter, who prepared that specification and that drawing, knew enough about the problem with which they were dealing, to either make a useful paper bag machine on the general plan of that patent, or to set forth on paper how such a machine could be made.

The defendant says on information and belief, that the the said Liddell letters patent, No. 558,969, are void, because the description of the alleged invention in the specification, is not in such full, clear, concise and exact terms as to enable any person skilled in the art to which it appertains, to make and use the same.

The defendant says, on information and belief, that the said Liddell letters patent, No. 558,969, are void, because said letters patent contain a needless multiplication of nebulous claims calculated to mislead and deceive the public; and because William Liddell, the alleged inventor, did not in said letters patent particularly point out and distinctly claim any part, improvement or combination; and because though each of the eight claims of said letters patent purports to be for a combination, some of the elements of each of those eight combinations, instead of being particularly pointed out therein, are designated only by words purporting to represent their functions, contrary to Section 4888 of the Revised Statutes of the United States.

The defendant says that it has heretofore, since April 28, 1896, made and used many paper bag machines in the United States of America, and is still using them in the same country; but that all of those paper bag machines have been made in substantial conformity to certain letters patent of the United States owned by the defendant; and in making and using those machnes, the defendant derived no knowledge or assistance whatever, from the said Liddell patent No. 558,969; and indeed never knew or heard of that patent till shortly before this suit was brought, when it received a letter from the complainant's counsel mentioning that patent, and requiring the defendant to discontinue its use of its own paper bag machines on account thereof.

The defendant says on information, advice and belief, that a court of equity has no jurisdiction to grant any prayer of the bill of complaint; even if the said Liddell patent No. 558,969, were valid; and even if the defendant's paper bag machines were to be held to infringe that patent; because the said patent, No. 558,969 is a mere paper proposition which the complainant has never put into effect or use; and because it is contrary to equity to suppress a useful and established business like that

which the defendant is prosecuting with its paper bag machines, at the request of a complainant which simply owns one paper bag machine patent that has never been employed by that complainant in any way in any paper bag machinery; and because the complainant in this case has a plain, adequate and complete remedy at law for any infringement which may have been done upon said Liddell letters patent, No. 558,969.

All of which statements and defenses this defendant is ready to aver, maintain and prove as this Honorable Court shall direct; and it prays hence to be dismissed with its costs in this behalf sustained.

In witness whereof, the said defendant, the Continental Bag Company, has duly executed this answer, and has hereunto affixed its corporate seal and caused the same to be attested by its secretary.

Continental Paper Bag Company,
[corporate seal.] H. Elsas, Prest.

Attest:
J. Kuhe,
Secretary.

Symonds, Snow, Cook & Hutchinson,
Solicitors for the Defendant.

Albert H. Walker,
Defendant's Counsel.
Floor 25,
Park Row Building,
New York.

UNITED STATES CIRCUIT COURT.

DISTRICT OF MAINE.

EASTERN PAPER BAG COMPANY

vs.

CONTINENTAL PAPER BAG COMPANY.

Defendant's Evidence.

Evidence taken on behalf of the defendant, at the office of Albert H. Walker, Floor 25, Park Row Bldg., Manhattan, New York, beginning on Monday, December, 8, 1902, at 11 o'clock in the forenoon, and continuing thereafter by adjournment from time to time; the said evidence being taken before Charles E. Smith, a Notary Public, having authority to act as such in Manhattan, New York; and being taken down by Grace Smith, a typewriter operator; and being thus taken before Charles E. Smith, by Grace Smith, in pursuance of the stipulation of the parties which is prefixed to the complainant's evidence, and which was made March 6, 1902.

Present—Charles E. Smith, the Notary Public; and L. F. H. Betts, counsel for the complainant; and Albert H Walker, counsel for the defendant.

EDWARD E. CLAUSSEN, a witness produced by the complainant's counsel, at the request of the defendant's counsel, to testify as the defendant's witness, with the same effect as if he had been produced and directed to testify by a supœna; being duly sworn, testifies as follows, being questioned by Mr. Walker:

Q. 1. Please state your name, residence, and occupation, and where and when your were born?

A. Edward E. Clausen; Hartford, Connecticut; mechanical engineer; Terre Haute, Indiana, in 1858.

Q. 2. When, if ever, did you begin doing anything about paper-bag machinery of any kind?

A. In the beginning of September, 1884.

Q. 3. State the circumstances under which you began your work in paper-bag machinery, in September, 1884, by explaining where you began that work, with what other person or persons, if any?

A. I started as draftsman under the direction of Mr. W. A Lorenz, and W. H. Honiss, who were then working on a bag machine for Messrs. Leinbach & Wolle, in Hartford, Connecticut. The beginning of the work was making patent office drawings, detail drawings, and construction drawings, for various ideas and inventions furnished by Mr. Lorenz and Mr. Honiss; and from that time on, I was almost entirely on bag-paper machines up to the present time.

Q. 4. How long did you continue to work with Lorenz & Honiss, or with one of them, after you began in September, 1884?

A. I worked with Mr. Lorenz until the latter part of 1889; and for one year, or a little over, I was working independent from Mr. Lorenz until October 1, 1890; and from October 1, 1890, until Ooctober 1, 1895, I worked with Mr. Lorenz entirely again on bag machines for the Consolidated S. O. S. Paper Bag Company.

Q. 5. When you left Lorenz, October 1, 1895, where did you go, and what did you do?

A. Directly after my contract expired, October 1, 1895, with the Consolidated S. O. S. Company, I went to the Ballerstein Building, in Hartford, Connecticut, and I continued working on bag machinery, and took in other work, that I was able to get a hold of.

Q. 6. Did you establish a mechanical engineering office of your own at the Ballerstein Building, October, 1895,

the new machines. The old machines were supplied with grippers as soon as the grippers were invented.

Adjourned until Tuesday, December 9, 1902, at 11 o'clock A. M.

Tuesday, December 9, 1902. Met pursuant to adjournment. Counsel present as before.

Q. 72. Now please to look at the Claussen & Mortson patent, No. 411,544, and state whether that patent is still owned by Claussen & Mortson, or whether it was sold to some person or corporation, and if so, to whom it was sold?

Complainant's counsel objects to the question as immaterial and irrelevant to any issue of this cause, and advises the witness that, in complainant's counsel's opinion, the witness is not bound to disclose his private business, unless he sees fit to do so, and that, therefore, he is not bound to disclose to whom this patent has been sold, if i has been sold, but the witness is at perfect liberty to disclose this fact if he wishes to do so.

A. I prefer not to answer the question.

Q. 73. Was any machine ever built, to your knowledge, in avowed accordance with this patent, No. 411,544, including the employment of what I understand to be the distinguishing characteristic of the patent, namely: the two pairs of spreading fingers, 124, 125, 126 and 127?

Complainant's counsel objects to the question as immaterial and irrelevant, and further as indefinite in not defining what is meant by the phrase "in avowed accordance"; and the question is further objected to on the ground that it is leading and improper in form, since the defendant's counsel undertakes to state what is the "distinguishing characteristic" of the patent, although he is not on the witness stand, and subject to cross examination by complainant's counsel.

A. Not to my knowledge, was that machine built.

Q. 74. If you have no objection to so doing, please to state whether the machine described and shown in the Claussen & Mortson patent, No. 411,544, would be a good machine, if built and used to manufacture continuous tucked paper tubing into paper bag blanks having one end folded down into a diamond shape shown in Figures 10 and 11, of the drawings.

Complainant's counsel objects to the question as immaterial and irrelevant, and advises the witness that this question calls for an expression of expert opinion by him, regarding the utility of this machine, and that the witness is not required under the subpœna to give this expert opinion, unless he is willing to do so; and suggests that defendant's counsel make a suitable arrangement with the witness as to compensation for rendering expert opinions. Complainant's counsel, however, states that if the witness chooses to give away his expert knowledge, complainant's counsel has no objection.

A. I prefer not to say anything further about the machine.

Q. 75. Please to look at the Taylor patent No. 439,703, and state whether you ever knew or heard of any machine being built in close conformity to the drawings of that patent?

Complainant's counsel objects to the question as immaterial and irrelevant, incompetent and indefinite.

A. No, I have not.

Q. 76. Please to look at the Kelliher patent, No. 439,843, and state what, if anything, you know about that patent, or any machine built in close conformity thereto, except what you have learned from examining the patent itself?

Same objections.

A. I don't know if ever a machine was built according

to this patent; and only know of what I learned out of the patent copies.

Q. 77. Please to look at the Patterson patent, No. 446,839, and state whether you have any knowledge of any machine built in close conformity to the drawings of that patent, including the employment of the tucker G, oscillating upon the pivot g'?

Same objections.

A. I only know of this patent through the patent copy.

Q. 78. Please to look at the Lorenz & Claussen patent No. 534,512, and state whether you are the Edward E. Claussen who was joint inventor with Mr. Lorenz, of the invention of that patent?

A. Yes, I am.

Q. 79. Please to state who prepared the specification of that patent, and conducted the application in the Patent Office?

Objected to as immaterial.

A. I don't remember. It was either Mr. Walker or Mr. Honiss.

Q. 80. I call your attention to the fact that this Lorenz & Claussen patent, No. 534,512, purports to show an improvement applicable to the Stilwell machine of the Stilwell patent, No. 417,346; and I ask you to state whether that improvement was ever actually applied to any of the Stilwell machines as far as you know?

Objected to as immaterial, irrelevant and indefinite in that the question does not refer the witness to any particular figure or figures of the drawings of the Lorenz & Claussen patent, to identify what particular mechanism counsel has in mind.

Q. 81. I call your attention to the fact that the Stilwell patent, No. 417,346, shows a pair of distending fingers L, L thrust into the forward end of a tucked paper tube, and used there to define two of the corners of the square bottom of the bag; and I call your attention to the fact that

the Lorenz & Claussen patent, No. 534,512, omits those distending fingers, and substitutes therefor, two blades 71, and 72, shown in Figures 1, 2, 3, 4, 5, 6, 7, 8, and 9; which blades work on the outside of the tucked paper tube, instead of on the inside like the extending fingers of Stilwell; and I ask you to state whether such outside blades were applied to any Stilwell machine as far as you know?

Objected to as immaterial, irrelevant and leading, and further as incompetent in that the witness has testified in answer to Q. 65 that he has never seen any such Stillwell machines.

A. Not that I know of.

Q. 82. Please to look at the Murchie patent, No. 540,556, and the Pettee patent, No. 542,447, and state whether you know anything about those patents, or either of them, except what you have learned from examining Patent Office copies thereof?

Objected to as immaterial and irrelevant.

A. Only what I learned through the patent copies.

Q. 83. Please to look at the Liddell patent, No. 558,969, and state whether you know anything about that patent, or any machine made in conformity to the drawings of that patent, except what you learned from Patent Office copies of the patent itself?

Objected to as immaterial and irrelevant.

A. I only know what I have learned from the patent itself.

Q. 84. Please to look at the Claussen patent, No. 598,497, and state whether you are the inventor of the machine of that patent?

A. I am.

Q. 85. Please to look at a pencil sketch I now show you, which has written at the top the following words: "Paper Bag Machine for Deering Bag, November 22d, '95. Ed. E. Claussen," and which contains four figures immediately under that heading, and on the upper two-thirds of

the sheet, while the lower one-third of the sheet contains two other figures below which are written the words "4000 stitches per minute. J. B. Merrow & Sons." Please to state who it was that made the upper four figures on that sheet of sketches?

Objected to as immaterial and irrelevant.

A. I made them.

Q. 86. Who wrote the words "Paper Bag Machine for Deering Bag, Nov. 22nd, '95, Ed. E. Claussen" at the top of the sheet?

Objected to as immaterial and irrelevant.

A. I wrote them.

Q. 87. What is the meaning of the date Nov. 22nd, '95, on that sheet?

Same objections.

A. It is the date when I made that drawing.

Q. 88. What did you represent by the four figures of drawing on the upper two-thirds of the sheet?

A. I represented a paper bag blank, and an oscillating plate which folded that blank at a transverse line across the blank, and two pairs of clips; the lower clips were intended to be carried on a folding bed, and the upper clips were supposed to revolve on the center of that oscillating plate. I am examining the drawing while I am answering this question.

Q. 89. What did you represent by the two figures on the lower one-third of the sheet?

A. It represents a mechanical motion which carries the needle-bar above and below the table of the Merrow crocheting machine. I have this sketch before me.

Q. 90. Who wrote the words "4000 stitches per minute, J. B. Merrow & Sons, under those two lower figures?

A. I did.

Q. 91. Who are J. B. Merrow & Sons?

A. It is a firm in Hartford, Connecticut, which manufactures crocheting machines and special machinery.

Q. 92. How did you happen to use the same sheet of paper for making the four paper bag machine figures on its upper two-thirds, and the two figures to represent the Merrow mechanical motion for crocheting machines, on the lower one-third?

A. I worked from time to time on drawings for the Merrow Machine Company, which is another name for J. B. Merrow & Sons, and I presume I had some little leisure time, and I sketched that mechanical motion on the same sheet.

Q. 93. Did you sketch the mechanical motion on the lower third of the sheet before or after you made the four paper bag machine figures on the upper two-thirds of the sheet?

A. I don't remember. But it isn't probable that I started the drawing at the bottom of the sheet; for a person usually starts at the top of a sheet.

Q. 94. I now call your attention to the fact that the sheet has written thereon in ink the word and figure "Sketch No. 4." Please to state who made that ink-writing upon the sheet?

A. I did.

Q. 95. When did you make that ink-writing, and for what purpose?

A. I added that ink-writing on that sketch at the time I gave Mr. Walker an explanation of the same, which was about the middle of June, 1902.

Q. 96. Am I right in understanding that you made that ink-writing at that time, simply to connect the sheet with some explanation thereof which you gave to Mr. Walker in June, 1902?

Objected to as leading and suggestive.

A. You are right.

Q. 97. Please to designate by some figure, of some patent

or patents, among those to which I have called your attention, the kind of paper bags to which you referred as the Deering Bag in what you wrote in pencil at the top of the sheet; and please to go through with the patents beginning with the Leinbach, Wolle & Brunner patent No. 242,661, and designate such figures, if any, as represent such a Deering bag?

A. The Deering bag is shown in Figure 12, of patent No. 242,661; and in Figures 1 and 2 of the Leinbach, Wolle & Brunner patent, No. 327,280; and in Figure 6 of patent 331,722; and in Figure 8 of patent No. 333,647; and in Figure 13 of patent No. 361,951; and in Figure 8 of patent, No. 407,794; and in Figure 14 of patent No. 439,843; and in Figure 12 of patent No. 446,839; and in Figure 19 of patent No. 540,556. It is shown opened out in Figure 6 of patent No. 542,447; and in its collapsed commercial condition in Figure 27 of the same patent.

Q. 98. Please to state what part of the work of making a Deering bag, such as is shown in the figures and patents specified in your last answer, purports to be performable in the Liddell patent No. 558,969, by the machinery shown in that patent?

Objected to as calling for expert opinion concerning the disclosure of the Liddell patent, and the witness is advised that in complainant's counsel's opinion he is not bound to express an opinion such as that called for in the question, without compensation paid him by Mr. Walker; but complainant's counsel states that if the witness is desirous of giving this information gratis, complainant's counsel has no objection.

A. I prefer not to answer.

Mr. Walker offers in evidence, the sheet headed "Paper Bag Machine for Deering Bag Nov. 22nd, Ed. E. Claussen" and identified and explained by the witness in his answer to Qs. 85 to 97, inclusive, and requests that it be

marked "Claussen Exhibit No. 1," and it is accordingly so marked.

Complainant's counsel objects to the offer in evidence, as immaterial and irrelevant.

Q. 99. Please to look at the tracing I now show you, and state whether it appears to be a copy of Claussen Exhibit, No. 1, except in not having any words written on it.

A. It is a copy of the same.

Q. 100. Now, to avoid making any mark upon the face of Claussen Exhibit, No. 1, for the purpose of connecting the parts of that exhibit with any further explanation you may make of those parts; I will ask you to make some marks upon the same parts on the tracing, so that the Court may easily connect your testimony with the parts shown in Claussen Exhibit, No. 1. And to begin with, I will ask you to kindly mark with a pen the capital letter A, upon the oscillating plate in each of the four figures; and to mark with the capital letter B, each of the upper clips which were supposed to revolve on the center of the oscillating plate?

A. I have done as requested.

Q. 101. Please to explain why you connect the capital letter B, in the second, third and fourth of the figures, with something which appears according to those figures to be under the parts in the first of the four figures, to which the leading lines from the capital letter B extend?

A. The lower parts which are indicated by B, are movable clips which move laterally outward, as shown in the first figure, and are identical alike; only the upper part, as shown in the second, third and fourth figures, are stationary and do not move laterally outward.

Q. 102. Please to mark the letter C, upon what you speak of in your last answer as the upper part, in every place where that upper part appears on the tracing?

A. I have done so.

Q. 103. Am I right in now understanding that the parts

and thereafter continue for a while at work on your own account?

A. Yes.

Q. 7. How long did you thus continue, before you made any contract with any paper bag machine company, to invent and design paper bag machinery for such Company?

A. I worked away until January 26, 1897.

Q. 8. With what Company, if any, did you make a contract to invent or design paper bag machinery, or construct paper bag machinery, in January, 1897?

A. It was for Mr. R. T. Spencer, who was Trustee for certain other parties.

Q. 9 Were the conditions of that trust fulfilled by Mr. Spencer or the other parties, so that he, or they, acquired the ownership of what you produced under that contract; or did that contract end in some other way?

A. The machine was not accepted, and so all patents and machinery, drawings, etc., which had been produced, reverted back to me, after paying a certain amount of money according to the contract.

Q. 10. Am I right in understanding that that contract gave to Mr. Spencer and those he represented, an option to purchase what you would produce during the time of the contract; and that the contract provided for the payment of some money, while the work was going forward; and provided also, that if the option was not exercised, by acquiring the products of the work, in pursuance of additional sums of money, the contract should be forfeited, and the property to which it related, should revert to you.

Complainant's counsel objects to the question as immaterial and irrelevant to any issue in this cause; and further on the ground that it is incompetent as calling for the contents of a written instrument. Complainant's counsel advises the witness that, in his opinion the witness is not

compelled to disclose the contents of a business contract, such as the present one, but complainant's counsel further states that he has no objection to the witness' so doing, if he deems it advisable to do so.

A. Yes.

Q. 11. When, if ever, after the Spencer contract was forfeited, did you next make a contract with any man, or with any corporation, relevant to your paper machine inventions, or relevant to paper bag machinery?

A. I entered in on a contract with Mr. Herman Elsas, of New York City, in 1899, which contract expired June 1, 1902. But I was in the employ of Mr. Herman Elsas until about June 21, 1902.

Q. 12. Did Mr. Elsas continue to hold this contract in his own name until June, 1902; or did he transfer it with your consent, to some other person or corporation?

A. It was transferred from Mr. Herman Elsas to the Continental Paper Bag Company, directly after the Company was organized.

Q. 13. What did you do next, after June 21, 1902?

A. I made a two-months' trip to Europe, and after returning, I went back to the Ballerstein Building in Hartford, Connecticut, and took up the same business of building and inventing paper bag machinery.

Q. 14. Have you since June 21, 1902, made any new contract with any person or corporation, to take whatever you may produce in paper bag machinery or paper bag machine inventions, during the time of such contract?

A. I have made a contract of that kind.

Q. 15. With what person or corporation have you made that contract, and how long ago was it made?

Complainant's counsel objects to this line of inquiry as immaterial and irrelevant.

A. With the Union Bag & Paper Company, on November 22, 1902.

Q. 16. Please state, if you have no objection, how long that contract is to run, according to its terms?

Complainant's counsel objects to the question as incompetent, irrelevant and immaterial, and advises the witness that he is not compelled to disclose the terms of this contract.

A. I prefer not to do so.

Q. 17. It is true, is it not, that you are now in the employ of the Union Bag & Paper Company, under that contract of November 22, 1902?

A. Yes.

Mr. Walker offers in evidence an official Patent Office Copy of each of the following letters patent of the United States of America:

No. 222,464, to William C. Cross, December 9, 1879.

No. 240,972, to William C. Cross, May 3, 1881.

No. 242,661, to Leinbach, Wolle & Brunner, June 7, 1881.

No. 327,280, to Leinbach, Wolle & Brunner, September 29, 1885.

No. 331,722, to Lorenz & Honiss, December 1, 1885.

No. 333,647, to Lorenz & Honiss, January 5, 1886.

No. 337,965, to Lorenz & Honiss, March 16, 1886.

No. 337,966, to Lorenz & Honiss, March 16, 1886.

No. 361,951 to Lorenz & Honiss, April 26, 1887.

No. 387,573, to Daniel Appel, August 7, 1888.

No. 407,794, to Charles B. Stilwell, July 30, 1889.

No. 410,841, to Lorenz & Claussen, September 10, 1889.

No. 410,842, to Lorenz & Honiss, September 10, 1889.

No. 411,544, to Claussen & Mortson, September 24, 1889.

No. 417,346, to Charles B. Stilwell, December 17, 1889.

No. 439,703, to Newton W. Taylor, November 4, 1890.

No. 439,843, to Frederick H. Kelliher, November 4, 1890.

No. 446,839, to William H. Patterson, February 17, 1891.

No. 510,410, to Luther C. Crowell, December 12, 1893.

No. 534,512, to Lorenz & Claussen, February 19, 1895.

No. 540,556, to S. T. Murchie, June 4, 1895.

No. 542,447, to Simon E. Pettee, July 9, 1895.

No. 543,571, to Charles Crist, July 30, 1895.

No. 558,969, to William Liddell, April 28, 1896.

No. 598,497, to Edward E. Claussen, February 8, 1898.

No. 635,090, to Claussen & Mortson, October 17, 1899.

Complainant's counsel objects to each and all of the foregoing patents, except the last three, in the foregoing list, as immaterial and irrelevant.

Mr. Walker explains to the Court that the first twenty-three of the foregoing patents are offered in evidence as constituting the material parts of the art prior to the Liddell patent, No. 558,969, upon which the suit is based; those twenty-three patents having been selected by Mr. Walker out of several hundred paper bag machine patents, granted by the United States prior to 1896.

Q. 18. Please state whether you are acquainted with the twenty-six paper bag machine patents which have just been offered in evidence, and copies of which I now show you?

Complainant's counsel objects to the question as indefinite, in not defining what counsel means by "acquainted."

A. I am acquainted more or less with all of them.

Q. 19. Please to look at the Lorenz & Honiss patent, No. 331,722, of December 1, 1885, and state what relation that patent has, if any, to the paper bag machine which Lorenz & Honiss were producing, or had in their possession, when you began to work with them, in September, 1884?

A. They had a machine in running order of this patent, No. 331,722.

Q. 20. Where was that machine when you first saw it in September, 1884?

Objected to as immaterial and irrelevant.

A. In the Batterson Building, Hartford, Connecticut.

Q. 21. Was that machine a good one in all respects? Or did it have some defect or undesirability?

Same objections, and also objected to as leading.

A. Yes, it had some undesirable features.

Q. 22. Please to mention whatever undesirable feature seemed to be most important?

Same objections.

A. The cutting-off was very poor, and then the co-operation of the blades was rather poor.

Q. 23. I call your attention to the fact that the tucked tube former of that machine made the longitudinal pasted seam on the under side of the tucked tubing, and I ask you whether that was an undesirability in the machine, or whether it was a good peculiarity?

Objected to as leading and as immaterial and irrelevant.

A. Yes, that was another disadvantage of the machine.

Q. 24. Did you ever see that machine running, making self-opening square paper bags, from a roll of paper, and delivering those bags completely folded and pasted?

A. Yes, I have.

Q. 25. What size of bag did that particular machine make?

Objected to as immaterial and irrelevant.

A. Two-pound bags.

Q. 26. At about what speed did you see that machine thus making those two-pound paper bags?

Same objection.

A. If I remember right, it was about seventy bags a minute.

Q. 27. Did it produce good bags at that rate?

Same objections, and also as indefinite, in that the term "good" is a comparative term.

A. Yes, it made good merchantable bags.

Q. 28. Now please to look at the Lorenz & Honiss Patent No. 333,647, applied for November 12, 1884, and granted January 5, 1886, and state whether you ever saw one paper bag machine made according to that patent?

Objected to as immaterial and irrelevant.

A. Yes, I have seen a machine constructed according to that patent.

Q. 29. Who constructed that machine, and what did you have to do, if anything, toward producing it?

Same objection.

A. I had nothing to do with building or designing of the machine whatsoever; as all the work was done at the time I entered the employ of Mr. Lorenz.

Q. 30. Please to look at the lower left-hand corner of each of the drawings of the patent, and state whether you are the same Edward E. Claussen whose name appears there as a witness to those drawings?

Same objection.

A. Yes, that is my signature.

Q. 31. Am I right in understanding that that machine was built when you entered the employ of Mr. Lorenz in September, 1884, and that the Patent Office drawings were made and witnessed by you after that time, and before the application was filed on November 12, 1884?

Same objection.

A. Yes, I think it was built before the Patent Office drawings were made.

Q. 32. To what extent was the machine of the patent, No. 333,647, successful, at the time you saw that particular machine in the Fall of 1884?

Objected to as immaterial and irrelevant.

Mr. Walker explains that this line of inquiry is intended to show in a general way, the evolution of the art of paper bag machinery to which the Liddell patent belongs, with a view to enable the court to judge of the

merits or demerits, validity or invalidity of that patent, in the light of that prior evolution of the same art.

A. It was only a hand machine, and would operate when turned very slowly by its hand-wheel.

Q. 33. When turned slowly by its hand-wheel, was that machine operative to manufacture continuous tucked paper tubing into square-bottom paper bags?

Same objections.

A. The machine had no appliance for making the tucked paper tube, but that part was formed on another machine, and then inserted into the model machine shown in patent, No. 333,647. It would complete the paper bags, when supplied wiih tucked paper tubing

Q. 34. Was that machine ever attempted to be run at high speed by steam power, as far as you know?

Same objections.

A. No, it was not.

Q. 35. Please to look at the Lorenz & Honiss patent, No. 337,965, and state whether you are the Edward E. Claussen whose name appears as a witness upon each of the five sheets of drawings.

A. Yes.

Q. 36. What, if anythi do you remember about any machine that was built by r. Lorenz or any one else, in close conformity to the drawings of that patent?

Objected to as immaterial and irrelevant.

A. There was also a machine built of the same nature as shown in patent No. 337,965, by William A. Lorenz and William H. Honiss. But I do not remember exactly if Mr. Honiss was at that time in Hartford.

Q. 37. In what shop in Hartford, was that machine built?

Same objections.

A. At Woodward & Rogers, in Hartford, Connecticut

Q. 38. Did you personally see that machine running?

A. Yes.

Q. 39. Did you see it running under steam power, or under hand power, or both?

Same objections.

A. I know it was running by hand power; but I could not say whether it was run by belt.

Q. 40. Please to look at the Lorenz & Honiss patent, No. 337,966, and state whether you ever saw a machine which was built in accordance with the drawings of that patent?

Objected to as immaterial, irrelevant and indefinite since the term "in accordance" with the drawings of the patent is an indefinite phrase, and may mean that the machine comprised all of the features shown in all of the figures of the patent, or only one or several of those figures, and it is suggested that, for the sake of definiteness, a certain figure or figures be referred to in the question.

A. There was a model built which only showed the folding mechanism for turning over the diamond, and resembled closely to that which is shown in Figure 8.

Q. 41. What did that model demonstrate, if anything, relevant to the practicability of opening out one end of a tucked paper tube, and folding it down into a diamond form, by means of the mechanism shown in Figure 8 of the Lorenz & Honiss patent, No. 337,966?

Same objections.

A. It demonstrated that a diamond fold could be formed when the lower tuck of the tube was held rigidly down upon a plate at three points, as 61, 62 and 63, and the upper ply of the tuck was held at three points, 82, 83 and 84.

Q. 42. About when was the model made and used to demonstrate those facts?

Same objections.

A. It was about 1887.

Q. 43. In that model did the presser-plate 67 carry the grippers 82, 83 and 84, and oscillate upon the pivot 68,

from the position shown in Figure 5 of the drawings, back to the position shown in Figure 9 of the drawings?

Same objections.

A. Yes, it did.

Q. 44. Now please to look at the Lorenz & Honiss patent, No. 361,951, and state whether you are the same Edward E. Claussen, whose name appears as a witness upon each of the fourteen sheets of drawings of that patent?

A. Yes, that is my signature.

Q. 45. Did you take any part in making the original fourteen sheets of drawings of that patent?

Objected to as immaterial and irrelevant.

A. Yes, I made a good part of those drawings.

Q. 46. How many machines, if any, were constructed by Lorenz & Honiss or under their direction, or under the direction of either of them, in close conformity to the drawings of the Lorenz & Honiss patent, No. 361,951?

Objected to as immaterial, irrelevant, and indefinite, for the reasons already stated.

A. I never knew the exact number, but I should think there vas at least some eighty to one hundred machines built in close conformity to the drawings shown in that patent

Q. 47. I call your attention to the fact that that patent states that the machine which it describes automatically manufactures square bottom paper bags from continuous tucked paper tubing, and also to the fact that the patent shows no apparatus for producing continuous tucked tubing, except that it shows the forward end of a former 56, with a fragment of tucked paper tubing around the forward part of that fragment of the former; and I ask you to state what mechanism was used with the machine of the Lorenz & Honiss patent, No. 361,951, to supply that machine with tucked paper tubing?

A. The former which was attached to the machine, and

which formed the tucked paper tubing from which the bags were made, was a hollow rectangular casting, from which the air was exhausted, and as the tube was drawn through the machine by the drawing-rolls, the tucks were drawn in on the sides; while the former converged to a point which was identical with the point where the drawing-rolls 37 and 36 touched one another.

Q. 48. To what extent, if at all, did the mechanism for making tucked paper tubing, which was used with the machine of the Lorenz & Honiss patent, No. 361,951, agree with the mechanism for making tucked paper tubing shown and described in the Lorenz & Honiss patent, No. 331,722?

A. It was similar to the one shown in 331,722, as shown in Figures 15 and 16; only that the former was reversed to the one as shown in Figure 15, and instead of having the rolls 103 and 105, which force in the paper, it consisted of a pneumatic arrangement which drew the air from the inside of the former and drew the tucks in against the former.

Q. 49. When you speak of the former of the Lorenz & Honiss patent, No. 331,722, being reversed, when used in connection with the Lorenz & Honiss machine, No. 361,951, do you mean that it was turned the other side up, so as to make the longitudinally pasted seam on the top of the tucked paper tube, or do you mean some other reversal than that?

Objected to as leading.

A. I mean that the seam was on the upper side of the former, and not on the lower side, as shown in Figure 15 of patent, No. 331,722.

Q. 50. In order to make the seam on the upper side of the former, was the whole former including the apron 73, reversed by being turned upside down?

Objected to as leading.

A. Yes.

Q. 51. Was each of the eighty or one hundred machines of the Lorenz & Horniss patent, No. 361,951, provided with such a tucked paper tube former as you have described?

Objected to as leading.

Yes.

Q. 52. How many sizes of self-opening square paper bags, like those shown on sheet 1, of the drawings of the Lorenz & Honiss patent, No. 361,951, were those eighty or one hundred machines adapted to make?

A. Nineteen different sizes.

Q. 53. Please to specify those nineteen sizes by mentioning the number of pounds of material which each of them was calculated to hold?

A. One-quarter; one-half; one; one and one-half; two; three; four; five; six; seven; eight; ten; twelve; fourteen; sixteen; twenty; twenty-five; thirty; thirty-five.

Q. 54. In what year were the first of those eighty or one hundred machines put into use in some paper bag factory, making paper bags for sale?

Objected to as incompetent.

A. In 1886.

Q. 55. Where was the paper bag factory in which the first of those machines was installed and how many of those machines were then installed in that factory?

Same objection; and also as immaterial and irrelevant.

A. I could not say exactly. They went to Brooklyn, but how many went I do not know. Then also some of them went to Plantsville, Connectibut.

Q. 56. When last did you see any of those Lorenz & Honiss machines running in a paper bag factory?

A. It was either in 1890, or 1891.

Q. 57. Where was that factory?

Objected to as immaterial and irrelevant.

A. Plantsville, Connecticut.

Q. 58. Do you understand that those eighty or one

hundred Lorenz & Honis machines are still running making paper bags; or do you understand that they have all gone out of use?

Objected to on the ground that the "understanding" of the witness is not competent evidence. Attention is called to the fact that the witness has stated that he has not seen any of these machines since 1891.

A. I understand that they are still running.

Q. 59. When, if ever, did you know of the existence of any paper bag machine, or of any plan for a paper bag machine (for making self-opening square paper bags, like those shown on sheet 1, of the drawings of the Lorenz & Honiss patent, No. 361,951, and for making those bags upon a flat reciprocating folding bed), which was, in your judgment, any better than those eighty or a hundred Lorenz & Honiss machines?

Objected to as immaterial and irrelevant.

A. I know of no other machine that ever was any better than this one, that had a reciprocating carriage or folding bed.

Q. 60. Now please to look at the Appel patent, No. 387,573, and state whether you ever saw a paper bag machine made by Mr. Appel, or by any one under his authority, or by any one else which was in close conformity to the drawings of that patent?

Objected to as immaterial, irrelevant and indefinite, for the reasons already stated.

A. No, I have not.

Q. 61. What experiment, or investigation did you ever make for the purpose of ascertaining the utility of the Appel plan which is shown in that patent, of opening one end of a tucked paper tube into a diamond form, by means of two rollers 105 and 106, and its appurtenances as shown in Figures 14, 15, 16 and 17 of the Appel patent No. 387,537?

Objected to as immaterial and irrelevant.

A. The time I was with Mr. Lorenz, we made some

experiments, by opening up a tube between two rollers, similar to that which is shown in Figs. 14, 15, 16 and 17, of Patent No. 387,573, but could not make any headway with it.

Q. 62. Did those experiments occur before or after August 7, 1888, when the Appel patent was granted?

A. I remember that it was Mr. Leinbach's problem to have us experiment with those rolls, and I think this must have been before 1888.

Q. 63. Did you ever closely examine this Appel Patent No. 387,573, for the purpose of ascertaining whether, in your judgment, that patent contains a successful solution of the problem of opening out one end of a tucked paper tube into a diamond form, between two such diverging rolls; and if so, with what result?

Objected to on the ground that if this question is intended to elicit from the witness an expert opinion, some arrangement should be entered into by defendant's counsel with the witness to compensate him for his expert knowledge.

Question withdrawn.

Q. 64. Please to look at the Stilwell Patent No. 407,794, and No. 417,346, and state about when it was that you became acquainted with those patents?

Objected to as immaterial, irrelevant and indefinite, since the word "acquainted" does not accurately signify whether counsel means when the witness first saw these patents, or when the witness had acquired such knowledge thereof, as to be able to render an expert opinion thereon.

A. After these patents were issued, I looked them over and got more or less familiar with them.

Q. 65. Did you ever see any machine that had been constructed by Mr. Stilwell or by his assignee, the Union Paper Bag Machine Company, or by anyone else, in close conformity to the drawings of these two Stilwell patents?

Objected to as immaterial and irrelevant.

A. No, I have not.

Q. 66. State whether those Stilwell patents are generally regarded by paper bag machine men as mere paper patents, on the one hand, or whether, on the other hand, it is generally understood by paper bag machine men that the machines of those patents have gone into extensive commercial use?

Objected to as immaterial and irrelevant, and also on the ground that it is incompetent, since the witness has not testified that he knows whether any paper bag men have any opinion concerning these patents or not.

A. Those that I have heard talking about machinery of the Stilwell type, always spoke in the highest terms of those machines, and it was conceded that the Stilwell machine is the most rapid machine.

Q. 67. It is generally understood, is it not, among paper bag machine men that several hundred paper bag machines made in close conformity to the Stilwell patents, No. 407,794 and No. 417,346, have been running all the time in this country for many years, making self-opening square paper bags at the rate of many millions each day?

Objected to on the ground that the "understanding" of the witness is not competent evidence. The question is further objected to as leading, and the form of the question is objected to on the ground that it purports to state facts by defendant's counsel who is not on the witness stand.

A. Yes.

Q. 68. Now please to look at the Lorenz & Claussen patent, No 410,841, and state whether you are joint inventor with William A. Lorenz of the invention of that patent?

A. Yes, I am.

Q. 69. I call your attention to the fact that the second paragraph of the specification of that patent, states that the improvements shown therein are particularly applicable to the paper bag machine shown in the Lorenz &

Honiss patent, No. 361,951; and I ask you to state whether and to what extent, those improvements, or either of them, were actually applied to any of the eighty or one hundred of the Lorenz & Honiss machines?

Objected to as immaterial and irrelevant, and also as indefinite in that it requires the witness to define the bounds of the "improvements" of this patent, in order to say what mechanism is and what mechanism is not within such bounds. It is suggested that the witness be referred to some one of the figures of the patent, in order that a definite and clear answer may be given to the inquiry.

Mr. Walker complies with the suggestion by specifying first, the side-plates, 10 and 11; and second, the grippers 55, and 56, which grippers are pivoted in a recess in the surface of the folding bed or cylinder 32; as being those distinguishing characteristics of this patent to which the question relates.

A. Yes, they were used. The side plates 10 and 11, and the grippers 55 and 66, were applied to the Lorenz & Honiss machines in some cases.

Q. 70. Now, please to look at the Lorenz & Honiss patent, No. 410,842, and particularly at the grippers 12 and 13 provided with springs 14 and 15, and the studs 16 and 17, and state whether those things were applied to the box blades 136 and 137 in any of the Lorenz & Honiss machines of the Lorenz & Honiss patent, No. 361,951?

Objected to as immaterial, irrelevant and indefinite, since by the phrase "Any of the machines of the Lorenz & Honiss patent, No. 361,951," no definite information is given the witness as to exactly what machine is meant, since it calls upon the witness to construe patent to Lorenz & Honiss, No. 361,951, and to state what is and what is not a machine of that patent; and it is suggested that the witness be referred to some particular figure of the drawing of this Lorenz & Honiss patent, No. 361,951, in order that he may

be given a clear understanding of the machine which counsel has in mind.

Mr. Walker states, in response to this suggestion, that the question was intended to refer to the eighty or one hundred machines of the Lorenz & Honiss patent, No. 361,951, of which the witness has testified; and Mr. Walker further calls the attention of the witness to the fact that many of the drawings of the Lorenz & Honiss patent, No. 361,951, including Figure 22 of those drawings, show a pair of box blades 136 and 137, and that the same box blades are shown and are designated by the same numerals in the drawings of the Lorenz & Honiss patent, No. 410,842, including Figure 11, or those drawings; and also calls attention to the fact that in the drawings of the Lorenz & Honiss patent, No. 410,842, those box blades are provided with grippers 12 and 13, having springs 14 and 15, and working connection with studs 16 and 17, which studs are fixed to the tuck-blades 132 and 133; and having made this explanation, the witness is asked to state whether such grippers 12 and 13, with their springs, were applied to the box blades 136 and 137 in any of the eighty or one hundred Lorenz & Honiss machines.

A. I believe that all the machines that were built, were supplied with those grippers and springs.

Q. 71. Were all those machines thus supplied with those grippers and springs when they were made originally; or were those grippers and springs added about 1889, to such of those machines as had already been built, and were those grippers and springs afterwards applied to all new Lorenz & Honiss machines?

Objected to as immaterial, irrelevant and leading.

A. The grippers were supplied to all the machines just as soon as they were invented; and after they had been tried and tested, they were placed directly on the blades of

B, in the first figure, are directly under the parts C, in that figure, and that the leading lines which extend from the letters B, in the first figure are not intended to designate the parts C, but are intended to designate parts immediately under the parts C, and which do not themselves appear in the first figure, for that reason?

Objected to as leading and suggestive.

A. Yes.

Q. 104. Do the parts C, oscillate on the same center of oscillation with the plate A?

A. Yes, they do.

Q. 105. Please to mark with ink upon the tracing, the letter D, and connect it with the shaft upon which the plate A and the parts C are intended to oscillate?

A. I have done so.

Q. 106. Was that shaft intended to turn in fixed journals, or were the journals themselves to oscillate or move in some direction?

Objected to as immaterial and irrelevant, since it does not show that Claussen Sketch No. 1, shows any journals.

A. The shaft was supposed to be mounted in fixed journals; for this reason, that the center line of the shaft D, of those four figures, are all in one line vertically, and horizontally, the lines a, a, pass also through that center. If it had been my intention that the shaft itself was mounted in an oscillating arm, it would show the vertical center line not passing through the centers of those shafts.

Q. 107. You say in answer to Q. 88 that the lower pair of clips were intended to be carried on a folding bed. Please to mark the letter E upon the tracing to indicate one of those lower pair of clips wherever one of them appears?

A. I have done as requested.

Q. 108. Does the tracing show any folding bed?

A. No.

Q. 109. What is indicated by the semi-circular broken line, which appears in the fourth of the four figures, and which I ask you to mark with the letter F?

A. That semi-circle, which is marked F, indicates a path of the edge of the plate A, when oscillating upon its shaft D.

Q. 110. State whether the folding bed carrying the grippers E, must also oscillate or move harmoniously with the edge of the plate A?

Objected to as immaterial, irrelevant and incompetent, since the witness has just testified that no folding bed is shown in Claussen Sketch No. 1, or in the tracing of it. The question is further indefinite in not defining what is meant by "harmoniously," and also is leading.

Question withdrawn for the present.

Q. 111. How long have you practiced the art of making drawings to represent paper bag machines?

A. Since September, 1884.

Q. 112. In the practice of that art, is everything actually represented by lines or other marks, on the one hand; or on the other hand, is it understood among persons skilled in that art, that some things are to be implied from other things which are represented in paper bag machine drawings?

Complainant's counsel objects to the question, as immaterial, irrelevant, leading and speculative.

A. No mechanical sketch is hardly ever complete; if it were, it would be a drawing.

Q. 113. You say, in reply to Q. 88, that the lower clips shown on Claussen Exhibit No. 1, were intended to be carried on a folding bed. Now please to state whether that intention would or would not be apparent to a mechanical engineer previously skilled in paper bag machinery, as soon as he came to examine Claussen Exhibit No. 1, and to understand what is actually shown in that Exhibit?

Complainant's counsel objects to the question as immaterial, irrelevant and speculative, since it requires the witness to express an opinion as to whether or not a third person would or would not imply something which the witness has just testified is not shown in the sketch.

A. I think he would.

Q. 114. What kind of a folding bed did you intend to use when you made Claussen Exhibit No. 1, and which you intended to carry the lower clips E?

Complainant's counsel objects to the question as immaterial, irrelevant and speculative.

A. I don't remember what kind of a folding bed I had in mind, when I was making the sketch; it might have been a reciprocating one or it might have been a rotating one.

Q. 115. What intention did you have, if any, at that time, about any upward and downward movement of the folding bed; whether it reciprocated forward and backward on the one hand; or whether on the other hand, it rotated around a central shaft?

Objected to as immaterial, irrelevant and speculative and as already answered in the last answer.

A. I don't remember what kind I intended, at the time I made the sketch.

Q. 116. What thought did you have at the time you made Claussen Exhibit No. 1, upon the question whether the tucker-plate A of that sketch could work with a folding bed, the surface of which would always occupy the same horizontal elevation, during the time the edge of the tucker-plate was passing through its semi-circular path F?

Complainant's counsel objects to the question as immaterial, irrelevant, speculative, and as already answered in the last two answers.

Mr. Walker states to the Court that counsel is in error in supposing that this question has been already answered; and states that the question is immaterial and otherwise proper, because its answer will help to show what concep-

tion of a paper bag mechanism the witness had formed on November 22, 1895, and partly represented or wholly represented, as the case may be, in Claussen Exhibit No. 1 made on that day.

A. I don't really remember what kind of bed I should have used at the time ; for if I had had any idea I should have indicated it on the sketch.

Q. 117. I call your attention to the line with a hook-like extension which extends diagonally upward and backward from the shaft D in the fourth of the figures, and ask you what that line was intended to represent, and which I ask you to indicate on the tracing by marking it G ?

A. That line was supposed to be the end of the paper bag blank, being turned over by the tucker-plate.

Q. 118. What is represented by the two parallel broken lines running lengthwise of the first figure of the tracing, and which lines I ask you to mark on the tracing with the letter H ?

A. Those lines indicate the depths of the tucks of the paper bag blank.

Q. 119. What is indicated by the long area which appears in the second figure to be about twice as wide at one end as at the other end, and which I ask you to mark with the letter I ?

A. It indicates the side view of a paper bag blank.

Q. 120. Please to now mark the letter I, also, just outside of each edge of the paper bag blank in the first figure ?

A. I have done so.

Q. 121. What is indicated by the circular areas in the second and third figures, and which have diagonal section lines drawn across them, and which I ask you to mark with the letter J ?

A. They represent bars over which the rear end of a

paper bag blank is drawn, during the time the plate oscillates.

Q. 122. Please, now to mark Figure 1, Figure 2, Figure 3 and Figure 4, opposite to each of the four figures of the tracing?

A. I have done as requested.

Mr. Walker offers the tracing which the witness has thus completed, in evidence, and requests that it be marked Claussen Exhibit No. 2, and it is accordingly so marked.

Complainant's counsel objects to the offer as immaterial, irrelevant and incompetent.

Q. 123. When you established your own mechanical engineering office in the Ballerstein Building, in Hartford, Connecticut, October 1, 1895; in what department of mechanical engineering did you first begin to plan or work?

A. I worked part of the time on Mr. B. M. Des Jardins' work, assisting him in preparing some drawings relating to type justifiers, and the balance of my time I devoted to paper bag machinery.

Q. 124. Who invented the paper bag mechanism shown in Claussen Exhibit No. 1 and Claussen Exhibit No. 2?

A. I did.

Q. 125. What part of the work of making a Deering bag was to be done by the mechanism thus invented by you and shown in Claussen Exhibit No. 1 and Claussen Exhibit No. 2?

A. That mechanism was invented to convert the forward end of a paper bag blank into the diamond fold.

Q. 126. Please to specify what you mean by the diamond fold when making a Deering bag; and make that specification plain by pointing out, if you can, such a diamond fold in one or more of the patents I have shown you?

A. A diamond fold, just referred to, is represented in Figures 2 and 3 of patent No. 331,722; also in Fgures 5

and 6 of patent No. 333,647; also in Figures 4 and 5 of patent No. 337,965; also in Figures 3 and 4 of patent No. 337,966; also in Figure 10 of patent No. 361,951; also in Figure 24 of patent No. 387,573; also in Figures 4 and 5 of patent No. 407,794; also in Figures 9 and 10 of patent No. 410,841; also Figures 11 and 15 of patent No. 410,842; and also Figures 9 and 10 of patent, No. 411,544; also Figure 12 of Patent No. 439,703; and also Figure 11 of patent No. 439,843; and also Figure 10 of patent, No. 446,839; and also Figure 9, of patent, No. 534,512; and also Figure 16, of patent, No. 540,556; and also Figure 5, of patent, No. 542,447; and also Figure 8, of patent, No. 558,969; and Figures 15 and 16, of patent, No, 598,497.

Q. 127. When, if ever, after October 1, 1895, did you employ any person in your office to assist you in making drawings, or to make drawings under your direction?

A. I employed Miss J. S. Ellsworth in the Spring of 1896.

Q. 128. Please now look at a large drawing I now show you, upon a sheet of heavy brown paper which has more than a square foot of descriptive writing thereon, which descriptive writing ends as follows: "Hartford, Conn., Jan. 17, 1896; Ed. E. Claussen." And I ask you to state who it was that made that drawing, and wrote that descriptive writing?

A. I made the drawing, and wrote the description of the machine on that sheet of drawing.

Q. 129. What is meant by the date, January 17, 1896?

A. That is the date of the day I put the description on that drawing.

Q. 130. Did you make the drawing before you wrote the description, or did you write the description before you made the drawing on that sheet?

A. I made the drawing first, and then wrote the description on it.

Q. 131. About how long before January 17, 1896, did you begin work making the drawing on that sheet?

A. In the lower right hand corner of that drawing of the sheet is a title in which it says, "This drawing was started Nov. 23, 1895, finished January 17, 1896."

Q. 132. What do you say about the truth of that statement which is on the face of the sheet?

A. Very often when I start a drawing, I wish to keep time of the same, I mark in lead pencil, "This drawing started—such and such a date, and no doubt this was done in this case also.

Q. 133. When was it that you wrote the matter in black ink, on the lower right-hand corner of the sheet, which reads as follows: "Paper Bag Machine for Process (case A), dated Nov. 4, '95. This drawing was started Nov. 23, 1895; finished Jan. 17, 1896. Invented and drawn by Ed. E. Claussen"?

A. It was undoubtedly written directly on the same day when I finished that drawing, which was January 17, 1896.

Q. 134. Are you certain, or are you uncertain, that that drawing was started Nov. 23, 1895?

A. I am certain.

Q. 135. I call your attention to the written matter at the bottom of the sheet, which reads, "Witnesses Benj. M. Des Jardins, Jan. 17, 1896," and I ask you to state in whose handwriting is the word "witnesses," and in whose handwriting is the signature and the date below the word "witnesses"?

A. The word "witnesses" was written by myself; and the signature, Benj. M. Des Jardins, as well as the date Jan. 17, 1896, was written by Mr. Des Jardins, on that date, in my presence.

Q. 136. I call your attention to the word and figure, "Drawing No. 3," at the right hand side of the sheet, and

I ask you when that word and figure were written there, and by whom, and for what purpose?

A. The words "Drawing No. 3," was written there by myself, just previous before sending the same to Mr. Walker's office, Park Row Building, New York City, about the middle of June, 1902, and for the reason to designate the same, in connection with a letter written to Mr. Walker by myself, about the middle of June, 1902.

Q. 137. What is the meaning of the matter in blue pencil, which reads "Case 36," and which would appear to be a substitute for the matter in black ink which reads "Case A" in the written matter at the lower right-hand corner of the sheet?

A. The word and figures "Case 36" indicate and refer to my patent case list, which is a process patent application, which I filed about that time.

Q. 138. How did it happen that you first designated that procoss case of November 4, 1895, as "Case A" and afterward changed that designation to "Case 36?"

A. I remember at the time that I was going to change from the regular numerical numbering to the alphabetical designations; but it was of only a very short duration, and I returned to the old numbers again.

Q. 139. Am I right in understanding that before November 4, 1895, you had numbered the patent applications in which you were a sole or joint inventor, and that the numbers reached as high as 35; and that on November 4, 1895, you thought to begin a new series of inventions, and to letter that new series alphabetically, beginning with the letter A; but that afterwards you changed the designations of the new series to numerals, beginning with 36, so that you could keep track of all your inventions in your own office by one series of consecutive numbers for the whole of them?

Objected to as leading.

A. You are right.

Adjourned until Wednesday, December 10, 1902, at 11 o'clock in the forenoon.

Wednesday, December 10, 1902, 11 o'clock, A. M. Met pursuant to adjournment; counsel present as before.

Mr. Walker offers in evidence the drawing which was presented to the witness, in Q. 128, and requests that it be marked Claussen Exhibit No. 3, and it is accordingly so marked.

Complainant's counsel objects to the offer as immaterial and irrelevant.

Q. 140. Please state what kind of machinery is represented in Claussen Exhibit No. 3? A. It is the drawing of a paper bag machine.

Q. 141. Was that paper bag machine an invention of your own, as, according to the written matter upon the sheet, it is stated to have been? A. Yes.

Q. 142. Was that paper bag machine adapted to manufacture paper tubing, and then to manufacture that paper tubing into paper bags; or was it adapted to receive paper tubing from some other machine or mechanism, and then to manufacture or help manufacture that paper tubing into paper bags?

Objected to as leading.

A. The drawing is represented to show a machine which was adapted to receive paper tube which was previously manufactured on the former, not shown in the drawings, and after receiving the tube, to separate the same into bag blanks, and convert the forward end of the blank into a paper bag.

Q. 143. Was the machine adapted to receive and work with a flat paper tube, or was it adapted to receive and work with a tucked paper tube?

Objected to as leading.

A. It was adapted to receive a tucked paper tube.

Q. 144. I show you a section of tucked paper tube, and I ask you to fold the forward end of that section into the form which the machine of Claussen Exhibit No. 3, was adapted to fold it; and having done so, I will ask you to take some mucilage and paste the fold down so as to show exactly what bag the machine of Claussen Exhibit, No. 3, was adapted to make?

Objected to as immaterial.

A. I have done as requested, and now hand you the resulting bag.

Mr. Walker offers in evidence the bag produced by the witness and it is marked "Claussen Exhibit, No. 4."

Objected to as immaterial.

Q. 145. Precisely how did the process of November 4, 1895, which you first designated as Case A, and afterward as Case 36, differ from the Deering process of making a self-opening square paper bag?

A. The difference between the bag manufactured on the machine of Claussen Exhibit, No. 3, and the Deering bag, is that the rear end of the diamond, or second flap, is folded beneath the side flaps instead of over and on top of the side flaps; and the process of Case 36 differs from the Deering process in that respect that the rear end of the diamond need not be folded forward as is the case in the Deering bag.

Q. 146. Am I right in understanding that the rear end of the diamond need not be folded forward in the process of Case 36, because it is never folded backwards in that process, but is retained in its original forward position during the formation of the inward triangular folds?

Objected to as leading.

A. It is always held in the forward projecting position, during the formation of the inwardly projecting folds.

Q. 147. Now please to point out and specify the thing in Claussen Exhibit No. 3, which was adopted to hold the

rear end of the diamond in the forward projecting position, during the formation of the inwardly projecting folds?

A. It is the plate 10, having the edges 11 and 12, of the Claussen Exhibit No. 3.

Q. 148. What is the name which is given to that plate 10 in the written description on the face of the sheet of Claussen Exhibit No. 3?

A. It is called the Vee plate.

Q. 149. Does that Vee plate oscillate or move in any way; or is it permanently fastened to the stationary frame of the machine?

Objected to as leading.

A. It is rigidly supported upon the side-frames of the machine.

Q. 150. I observe in Figures 5 and 6 of Claussen Exhibit No. 3 that the plate 10, while being nearly horizontal, has a comparatively narrow flange extending forward and downward from its rear edge. Please to state the function of that flange?

Objected to as leading, and also because defendant's counsel assumes to testify just what is or what is not shown in Claussen Exhibit No. 3.

A. It is a simple guide for the forward end of the paper, as it moves under that plate 10.

Q. 151. Please to read through the written description of January 17, 1896, which you wrote upon the face of the sheet of Claussen Exhibit No. 3, and state whether that description is correct, as far as it goes?

A. The description is correct, with the exception of the numeral 16a, which is marked on the connecting rod in Figure 5; whereas, in the description it is called the cam 16a, and its connecting mechanism, and therefore the numeral 16a should have been preferably placed near the cam.

Q. 152. I call your attention to the following language in the description on the face of Claussen Exhibit No. 3,

namely: "The cylinder 6 is provided with a carrier 6a pivoted on the same shaft as the front clip 19, and adapted to be moved out of the path of the cylinder or circle by means of the roll 7, journaled on said carrier, and engaging with the cam 8, as shown in Figure 5. Clips 18 and 20, having clasped the lower tucks, then swing down, see Fig. 6; and the tucker plate P is rotated by means of the shaft sectors and cam 9." Please to state the general character of the cam 8, which is referred to in the matter I have quoted from the description, by stating whether that cam is a stationary cam or a rotating cam, and whether the roll 7 runs around the edge of that cam as the cylinder revolves, or whether the cam operates upon the roller and carrier 6a in some other way than that?

Objected to as leading.

A. The cam 8 is a stationary cam, and the roll 7 engages the outside circumference and travels around the cam.

Q. 153. Does the cylinder 6 revolve around its shaft in a clock-wise direction, or does it revolve around its shaft in the direction opposite to that taken by the hands of a clock?

Objected to as leading.

A. The cylinder revolves in the direction of the hands of a clock, as shown by the arrow head directly to the right hand of the numeral 6 in Figure 2.

Q. 154. What is the function of that outward extension of the edge of the cam 8 over which the roller 7 is riding in Figure 5, but from which it has descended again in Figure 6?

A. The hump on the cam 8, serves to throw the carrier 6a out of the path of the periphery of the cylinder 6.

Q. 155. Now, it clearly appears in your testimony that the machine of Claussen Exhibit No 3 shows, among other things, a rotating cylinder or conveyer, and an oscillating

carrier pivoted to that cylinder, and oscillating radially of the cylinder, so as to swing outward and inward in respect of the circle or periphery of the cylinder; and I ask you to state who was the inventor of that particular combination of rotating cylinder and oscillating carrier?

Objected to on the ground that the question assumes to state what the witness has already testified; and attention is called to the fact that the witness has not testified that the carrier oscillates "radially of the cylinder" as stated in the question.

Question withdrawn.

Q. 156. In the machine of Claussen Exhibit No. 3, in what way does the carrier 6a move relatively to the cylinder 6?

A. The carrier 6a moves radially toward and away from the centre of the cylinder, having the forward end pivoted to that cylinder or conveyer. And the rear end of the carrier is elevated upward out of the circumference of that cylinder, by the roll 7, which is fastened to the carrier, moving up on the hump of the cam 8; and then as the cylinder is carried forward in the direction of the hands of a clock, the carrier is brought back toward the center of the cylinder when moving down on the forward side of the hump into its normal position, which is the circumference of the cylinder.

Q. 157. Who invented that combination of rotating cylinder and oscillating carrier?

Complainant's counsel objects to the question as indefinite in not defining whether counsel means who invented the particular parts delineated or illustrated in Claussen Exhibit No. 3, or who invented the combination of parts mentioned in the question in the abstract, in view of the prior state of the art exhibited in the patents shown the witness, in Q. 18.

Question withdrawn.

Q. 158. I call your attention to the cylinder 6, revolving

in a clock wise direction, and to the carrier 6a the forward end of which is pivoted to that cylinder, parallel with the periphery thereof, and the rear end of which swings radially outward and inward as the whole carrier revolves with the cylinder; and I ask you state who invented that particular combination of rotating cylinder and oscillating carrier which is shown in Claussen Exhibit, No. 3?

A. I did.

Q. 159. Now please to refresh your recollection and state whether you conceived that invention before you began to make the drawing Claussen Exhibit, No. 3, on the one hand; or whether on the other hand, you conceived that particular combination during the time you were making that drawing?

A. I don't remember.

Q. 160. Do you remember in what order you made the six figures of Claussen Exhibit, No. 3?

A. Well, it is always customary to start with a plan and side view, at the same time beginning with the drawing rolls 1, 1, and working in the direction the tube travels. Therefore, I think I made Figure 1 and Figure 2, first, and finished those two figures before going on to Figures 3, 4, 5 and 6.

Q. 161. About how early, during the time from November 23, 1895, to January 17, 1896, did you make that part of Figure 2, which shows the revolving cylinder, 6, and the oscillating carrier 6a and the cam 8?

A. I was interrupted several times during the time I was working on Claussen Exhibit, No. 3; but believe that it was near, before or after January 1, 1896.

Q. 162. How near to January 1, 1896, either before or after that day, did you make that part of Figure 2, which shows the revolving cylinder 6, and the oscillating carrier 6a and the cam 8?

A. I should say within the week of January 1, 1896,

and within three or four days from January 1, one way or the other.

Q. 163. Now, please to look at the part P, in Claussen Exhibit, No. 3, as it appears in Figure 1, Figure 2 and Figure 5, and also in the position which it occupies in Figure 6, and state the name, and also state the function of that part?

A. The letter P, as indicated on the drawing of Claussen Exhibit, No. 3, is termed "the tucker-plate," and the function of the same is to turn that portion of the tube which lies between the rear edge of the completed bag, and the transverse folding line downward, forward and again upward, during the formation of the inwardly projecting triangular folds.

Q. 164. In what way does the tucker-plate P move in order to perform that function?

A. It oscillates upon its shaft, which is shown at the upper edge of the tucker plate in Figure 6, and at the right hand edge of the tucker plate in Figures 2 and 5. The path of oscillation of the edge of the tucker plate is indicated by a semi-circular dash-and-dot line in Figure 2.

Q. 165. Now please to compare the tucker plate P in Claussen Exhibit No. 3, with the tucker plate A in Claussen Exhibit No. 2, and with the tucker plate in Claussen Exhibit No. 1, and state whether they agree or disagree in function and operation?

Objected to as immaterial.

A. They agree in function and operation.

Q. 166. What difference, if any, exists in construction or form between the tucker plate A. of Claussen Exhibit, No. 2, and its original in Claussen Exhibit, No. 1, on the one hand; and the tucker plate P of Claussen Exhibit. No. 3, on the other hand?

Same objection.

A. They are the same in construction and form; but vary somewhat in proportion.

Q. 167. Now, you have testified that when you made Claussen Exhibit, No. 1, you did not, as far as you now remember, have a definite plan for a folding bed to go under the tucker plate of that exhibit and co-operate with it to make a diamond form. Please now to state whether the cylinder 6 and the oscillating carrier 6a of Claussen Exhibit, No. 3, do or do not constitute a suitable apparatus to use with the tucker plate or Claussen Exhibit, No. 1, to open out one end of a tucked paper into a diamond form for the purpose of making a Deering bag?

Objected to as immaterial.

A. Yes, it does.

Q. 168. In the machine of Claussen, Exhibit No. 3, what provision is made for holding the forward end of the lower ply of a tucked paper tube down upon the carrier 6a?

A. The tube is held down to the carrier 6a by the front clip 19, and the two side clips 18 and 20.

Q. 169. What provision is made or implied in that machine for holding the upper ply of a tucked paper tube together with the upper ply of each of the tucks against tucker plate P?

A. There are no provisions made.

Q. 170. In the machine of Claussen Exhibit No. 3, what are the functions of the clips 16?

A. The functions of the clips 16 are to turn over the triangular section of the portions of the bag which are situated between the forward edge of the tube, and that line which ultimately forms the rear of the bag blank, and to turn them against the edges 11 and 12, of the stationary plate 10, over on top of that plate, and hold them to the same.

Q. 171. The paper being held to the stationary Vee plate by the grippers 16, would there be any necessity for any grippers to hold the bag blank against the forward side of the tucker-plate P?

Objected to as leading.

A . No.

Q. 172. In the case of the machine of Claussen Exhib No. 1, and Claussen Exhibit No, 2, what provision is made for holding the upper ply of a tucked paper tube and the upper plys of the tucks of that tube, against the tucker plate A, or against the sections C, which you have explained, are practically parts of that tucker-plate A?

Objected to as immaterial.

A. I have provided in the Claussen Exhibits 1 and 2, clips B, for that purpose.

Q. 173. Now, Mr. Claussen, who, if anybody, had knowledge of what you were doing when you made Claussen Exhibit, No. 1?

Objected to as immaterial.

A. I don't think anybody had any knowledge of it.

Q. 174. Who, if anybody, had knowledge of what you were doing upon Claussen Exhibit No. 3, while you were making that Exhibit from November 23, 1895, until January 17, 1896, and before it was completed on January 17 1896?

A. Mr. Des Jardins was in the office almost continuously; but I do not think that I gave him any explanation of the drawing; but he saw me working at it.

Q. 175. To what extent, if at all, did you explain the drawing to him at the time he witnessed it January 17, 1896?

A. The explanation of disclosing the invention was not gone into detail; but just giving him a general idea of the same.

Q. 176. Where is Mr. Des Jardins now?

A. He is a resident of Hartford, Connecticut.

Q. 177. Now please to look at the Claussen patent, No. 598,497, and state when that patent was applied for?

A. The application was filed July 29, 1896.

Q. 178. I call your attention to the tucker plate 75, and its bevel-edged side nippers 83, of that patent, as they

appear in Figures 3, 5, 7, 9, 12, 14 and 16, and in other figures of the patent; and I ask you to state how that tucker plate and those side nippers agree or disagree as the case may be, with the tucker plate and its side nippers of Claussen Exhibit No. 1, and which latter tucker plate in Claussen Exhibit No. 2, is indicated by the letter A; and which side nippers in Claussen Exhibit No. 2, are indicated by the letter B. And in stating how the tucker plate and side nippers of the Claussen patent, No. 598,497, agree or disagree with the tucker plate and side nippers of Claussen Exhibit No. 1, please to state how they agree in function, in mode of operation, and in construction?

Objected to as immaterial.

A. The mode of operation and function of the tucker plate in Claussen Exhibit, No. 1, and 2, and the tucker plate and side nippers in the Claussen patent, No. 598,497, is identical; the construction, however, varies in this respect, that in the patent, No. 598,497, the tucker plate 75, is a single piece of sheet metal; whereas, in the Claussen Exhibits, Nos. 1 and 2, the tucker plate is represented as a plate from which certain portions have been cut away.

Q. 179. I call your attention to the fact that in claim 2, of the Claussen patent, No. 598.497, the tucker plate of that patent is designated as "a tucker plate vibrating upon trunnions not substantially on a line with its defining edge"; and that the same definition of that tucker plate is contained in claim 3, and in claim 5, of that patent. Now, please to state whether that definition does or does not fit the tucker plate of Claussen Exhibit No. 1?

Objected to as immaterial.

A. Yes, it does.

Q. 180. State whether that definition does or does not fit the tucker plate P of Claussen Exhibit No. 3?

Same objection.

A. Yes, it does.

Q. 181. I call your attention to the Lorenz & Honiss patent, No. 337,966, which shows an oscillating presser-plate vibrating upon trunnions which are on a line with the defining edge of the plate; and I ask you to state where, if anywhere, in the art, prior to November 22, 1895, there is to be found a tucker plate in a paper bag machine, and which tucker plate vibrates upon trunnions, not substantially on a line with its defining edge, as far as you are acquainted with that prior art?

Objected to for the reason that defendant's counsel assumes to testify as to what is shown in the Lorenz & Honiss patent referred to.

A. There is no tucker plate that I know of in any of the bag machine patents that I have looked over, which swings upon trunnions not substantially on a line with its defining edge, prior to my sketch of November 22, 1895.

Q. 182. Am I right in understanding that the tucker plate of your patent, No. 598,497, which vibrates upon trunnions not substantially on a line with its defining edge, originated with you, and that it originated with you in your sketch of November 22, 1895, which is now marked Claussen Exhibit No. 1?

Objected to as leading.

A. You are right.

Q. 183. What is the scheme of that tucker plate, in respect of its trunnions being stationary or not being stationary, as the case may be?

A. The idea was to move the defining edge downward and forward and upward in the direction of the travel of the bag blank.

Q. 184. Was that downward and forward and upward movement to be in the semi-circular path F shown in Figure 4 of Claussen Exhibit No. 2, and was that motion to result from the trunnions of the tucker plate being fixed trunnions so that the defining edge of the tucker plate

would travel through that semi-circular path? Or was the result to be obtained in some other way?

Objected to as leading and suggestive of the manner in which counsel desires the question answered.

A. The tucker plate is mounted in a stationary trunnion for the reason that when the tucker plate oscillated the defining edge would travel in a semi-circular arc F, as shown in Figure 4, of Claussen Exhibit 2.

Q. 185. I call your attention to claim 5, of the Claussen patent, No. 598,497, and to the following language in that claim: "a tucker plate vibrating upon trunnions not substantially on a line with its defining edge, and devices to hold the upper ply of a tucked paper tube against the face of the tucker plate between the line of its trunnions and the line of its defining edge;" and I ask you to designate, by their proper numerals, the tucker plate referred to in this language, and also the devices referred to in this language to hold the upper ply of the tucked paper tube against the face of that tucker plate, so that the Court, by referring to the drawings of the patent, can easily see what parts are referred to by the quoted language?

A. The tucker plate is indicated by the numeral 75, and the nippers which hold the upper ply of the tube to that tucker plate are indicated by the numeral 83.

Q. 186. Where, if anywhere in Claussen Exhibit, No. 2, are those nippers to be found, and by what numeral or letter are they designated in that Exhibit?

A. They are to be found in Claussen Exhibit No. 2, indicated by B, in Figures 2, 3 and 4.

Q. 187. Who invented that combination of a tucker plate vibrating upon trunnions not substantially on the line with its defining edge, and devices to hold the upper ply of the tucked paper tube against the face of the tucker plate, between the line of its trunnion and the line of its defining edge?

A. I did.

Q. 188. How early did you make that invention?

A. November 22, 1895.

Q. 189. What evidence on paper exists as far as you know, that you made that invention on that day?

A. The Claussen Exhibit, No. 1.

Q. 190. I now call your attention to claim 1, of the Claussen patent, No. 598,497, and to the following language in that claim: "The combination of a conveyer; an oscillating carrier having its forward end pivoted to the conveyer"; and I ask you to state the numerals by which that conveyer and that oscillating carrier are respectively indicated in Figures 6, 8 and 10 of the drawings of the patent?

A. The conveyer is indicated by the numeral 55 in Figures 6, 8 and 10 of patent, No. 598,497; and the oscillating carrier is indicated by the numeral 56 in the same figures; and they are pivoted together by the pivot 57.

Q. 191. I call your attention to the fact that in claim 4, of the Claussen patent, No. 598,497, that conveyer is said to be a rotating conveyer; and I ask you to state whether it is shown as a rotating conveyer in Figures 6, 8 and 10 of the drawings?

A. Yes, it is.

Q. 192. In what direction, according to the Claussen patent, No. 598,497, is the carrier 56, to oscillate, relatively to the axis of the conveyer 55?

A. The carrier 56, is adapted to move toward the center of the conveyer as shown in Figures 6, 8 and 10 and 12; and also adapted to move back into its original position as shown in Figure 14 and 16.

Q. 193. Who invented that combination of a rotating conveyer and an oscillating carrier pivoted to that conveyer, and oscillating toward and from the center of rotation of the conveyer?

A. I did.

Q. 194. How early did you make that invention?

A. Between November 23, 1895, and January 17, 1896.

Q. 195. What evidence on paper, exists that you made that invention between those two dates?

A. Claussen Exhibit No. 3.

Q. 196. Now please to state according to the best of your recollection, and as near as you can, when it was, between November 23, 1895 and January 17, 1896, that you invented that combination of rotating conveyer and oscillating carrier?

Objected to as already answered.

A. Three or four days before or three or four days after January 1, 1896.

Q. 197. Am I right in understanding your last answer to mean that you made that invention as early as January 4, 1896, and perhaps as early as December 28, 1895?

Objected to as leading.

A. Yes.

Q. 198. It appears in the Claussen patent, No. 598,497, that in the machine of that patent, you brought the tucker plate, vibrating upon trunnions not substantially on a line with its defining edge, and having devices to hold the upper ply of the tucked paper tube against the face of the tucker plate, into co-operation with a rotating conveyer having an oscillating carrier pivoted thereto. Now please to state how early it occurred to you to put both those combinations working together in one machine.

Objected to as an incompetent statement on the part of defendant's counsel, and as already asked and answered several times.

A. At the time I made Claussen Exhibit, No. 3.

Q. 199. You have testified that you began making Claussen Exhibit, No. 3, November 23, 1895, and finished it January 17, 1896. Now please to state, as near as you can, when it was between these dates that it occurred to you to bring together into one machine, the combination of a rotating conveyer with an oscillating carrier pivoted

thereto; and the combination of a tucker plate vibrating upon trunnions not substantially on the line with its defining edge, and devices to hold the upper ply of a tucked paper tube against the face of the tucker plate between the line of its trunnions and the line of its defining edge?

A. About January 1, 1896.

Q. 200. Who made the eight sheets of drawings which constituted the drawings of the application, Serial No. 600,861, which you filed July 29, 1896, and in pursuance of which application, the Claussen patent, No. 598,497, was granted, February 8, 1898?

Objected to as immaterial.

A. I made them.

Q. 201. Who was Janette S. Ellsworth, one of the witnesses of those drawings?

A. She was a lady who just previously came to Hartford, in my employ.

Q. 202. What work was she doing for you at the time those drawings were being made by you?

A. Running a typewriter.

Q. 203. Did she ever learn to make Patent Office drawings when engaged in that work, while in your employment?

A. Yes, she did.

Q. 204. About when did she enter your employment, and about when did she begin to make drawings for you?

A. I think it was in March or April, 1896, that she entered my employment; but she started to make drawings of any mechanical use about July, 1896.

Q. 205. Did she do any work at all on the drawings of your application, No. 600,861?

A. No, I think not.

Q. 206. Who was Isaac A. Allen, Jr., the other witness to the drawings of your patent, No. 598,497?

A. He is an architect in Hartford.

Q. 207. What explanation, if any, did you make to him about the origin, history or character of the machine shown in those drawings?

A. I gave no explanation whatsoever, only asked him to witness my signature.

Q. 208. Who composed the specification and drawings of your application, No. 600,861, as that application was originally filed?

A. I did.

Q. 209. Who, if anyone, did anything toward amending that specification or its claims, while that application was pending in the Patent Office?

A. The present counsel for the defendant—Mr. Walker.

Q. 210. Do you happen to remember what paragraph, if any, of the descriptive part of the specification was written by Mr. Walker, and inserted in the application in an amendment thereof?

A. Yes. On page 5, lines 47 to 86 inclusive.

Adjourned until Thursday, December 11, 1902, at 11 o'clock in the forenoon.

Thursday, December 11, 1902, 11 o'clock A. M. Met pursuant to adjournment. Counsel present as before.

Q. 211. Please to state, as nearly as you are able, when you began work making the drawings for your application No. 600,861, upon which your patent, No. 598,497, was granted?

A. About February 1, 1896.

Q. 212. Were all of the eight sheets of drawings which now belong to your patent, No. 598,497, put in your application, No. 600,861, when that application was filed: or were some of those sheets added by amendment while that application was pending?

Objected to as leading.

A. I think they were all filed originally the same as they appear in the patent now.

Q. 213. When did you first see a copy of the Liddell patent, No. 558,969, of April 28, 1896?

A. I noticed the patent granted to Liddell, No. 558,969, when it came out in the Official Gazette; and I then wrote for a copy of the same, and received the copy soon after, probably on May 1, 1896.

Q. 214. When you first saw a copy of the Liddell patent, on or about May 1, 1896, what, if anything, did you do or think about comparing that patent with the drawings which you had begun to make in the previous February, and which afterwards became the drawings of your patent No. 598,497?

Objected to as immaterial.

A. After looking the patent over, I compared it with my sketches and drawings I had at the time, and came to the conclusion that I had a far better machine than represented in the Liddell patent, and I used more effort to finish up my drawings than I had previously done.

Q. 215. In finishing up your drawings, after May 1, 1896, for your application, No. 600,861, of July 29, 1896, in which way, or what way, if any way, were you influenced by the Liddell patent, No. 558,969?

Same objection.

A. I wasn't influenced in any way by that patent.

Q. 216. Did you ever see William Liddell, as far as you know, or have any correspondence or connection with him?

A. I never saw Mr. Liddell, as far as I know, and I never had any correspondence with him in any way, shape or form.

Q. 217. How long have you known Mr. Walker, the defendant's counsel?

A. I first saw Mr. Walker when he came to the office of Mr. Lorenz and Mr. Honiss, in the latter part of 1884;

but I did not know who he was until I was told so by Mr. Lorenz, about September or October, 1884, and I have known him ever since that time.

known him ever since that time.

Q. 218. To what extent, as far as you know, has Mr. Walker been engaged in soliciting patents on paper bag machines, and in litigating cases in courts on paper bag machine patents, and paper bag patents, since 1884?

A. I know that Mr. Walker has solicited a great number of patents for improvements on paper bags and paper bag machinery, since 1884; and also was retained to carry on litigation for the New York Paper Bag Machine Company.

Q. 219. Do you remember about some conference that you had with Mr. Walker in December, 1896, relative to your application, No. 600,861, which was then pending in the Patent Office, and relative to other applications of yours which were then pending in the Patent Office, for patents on other paper bag machines?

Objected to as immaterial and leading.

A. Yes, I remember very well, that shortly before Christmas 1896, Mr. Walker gave an opinion on six paper bag machine applications, of which the application Serial Number 600,861, filed July 29, 1896, was one of them.

Q. 220. Before furnishing that opinion, what, if anything, did you do with Mr. Walker, about investigating the letters patent of the United States on paper bag machines which had previously been granted, and which had not yet expired.

Same objections.

A. I remember going to Mr. Walker's house on Hawthorne Street, in Hartford, Connecticut, for four or five days, and diligently looking over all the unexpired patents on paper bag machinery.

Q. 221. Do you remember about how many unexpired paper bag machine patents you and Mr. Walker examined and investigated at that time?

Objected to as immaterial.

A. We looked over at least three hundred patents.

Q. 222. Do you remember how many of these three hundred patents were not yet seventeen years old, and therefore, not yet expired?

A. I know there were quite a number; but I couldn't state the number of the patents.

Q. 223. Please to look at a list of United States paper bag machine patents for the years 1880 to 1896 inclusive, which I now show you, and state what relation, if any, that list of patents has to the unexpired paper bag machine patents which you and Mr. Walker examined and investigated in December, 1896?

A. I think they are the unexpired patents we examined at that time.

Q. 224. Please to count that list of patents, and state how many there are?

A. There are 205 unexpired patents in that list.

Q. 225. Please to examine that list, and state whether it includes the Liddell patent, No. 558,969, of April 28, 1896?

A. Yes, it does.

Q. 226. What opinion did Mr. Walker express to you, or arrive at upon consultation with you, after that examination of those 205 patents, upon the question whether a machine made according to your then pending application, No. 600,861, would infringe any of those 205 patents?

Objected to as incompetent and immaterial.

A. The general opinion was that my then pending application, No. 600,861, would not infringe upon any of those 205 patents.

Q. 227. In speaking of that as a general opinion, do you mean to say it was the conclusion to which you and Mr. Walker agreed after you had joined in thoroughly examining those 205 patents in connection with your application, No. 600,861; or do you mean to say something different from that?

Objected to as leading and without foundation, as the witness has not testified that he had any opinion about the matter; also as already answered in the previous answer, where the witness states, in answer to the question as to the opinion expressed by Mr. Walker, that Mr. Walker's opinion was that there was no infringement.

A. It was Mr. Walker's opinion.

Q. 228. Did you agree or disagree with Mr. Walker in that opinion at that time?

In the absence of any agreement on the part of defendant's counsel to remunerate the witness for his services as an expert; the suggestion is made to the witness that he need not answer the question unless he desires, although complainant's counsel has no objection to his answering it, and he may if he pleases.

A. I did agree with Mr. Walker.

Q. 229. You stated, in reply to Qs. 7 and 8, that in January, 1897, you made a contract with Mr. R. T. Spencer as trustee for certain other parties relevant to paper bag machinery. Now please to state whether under that contract you did anything toward building a paper bag machine in general conformity to your application No. 600,861, and, if so, state what you did under the Spencer contract toward building such a machine?

Objected to as leading, immaterial and irrelevant.

A. A machine was built under that agreement, with Mr. R. T. Spencer as trustee, in general conformity with my application, Serial No. 600,861, filed July 29, 1896.

Q. 230. About when did you begin making the working drawings for that machine?

A. On February 1, 1897.

Q. 231. About how long did you work on those drawings and on that machine, before the machine was completed fully enough to be tried?

A. I worked ten weeks on the drawings, and the first bags were turned out on June 16, 1897.

Q. 232. Was the machine perfect enough at that time to be duplicated in large numbers, or did you have to continue to work upon it to that end?

A. Some slight changes would have improved the machine; but the way that machine was built, the workmanship was not as good as it might have been.

Q. 233. Did you make all the working drawings for that machine with your own hand?

A. I did the principal part of the work, but Miss J. S. Ellsworth helped me on the detail drawings.

Q. 234. In what machine shop was that machine built?

A. The machine was built at the Ætna Machine Co., on Commerce street, Hartford, Connecticut.

Q. 235. About when was the Spencer contract forfeited by Mr. Spencer, so that the machine, and the right to the patent thereon, reverted to you?

A. I do not exactly remember; but I should think it was in the Spring of 1898.

Q. 236. It appears that the patent, No. 598,497, was granted February 8, 1898, to Albert H. Walker, Trustee. Please to state for whom Mr. Walker was Trustee, in taking and holding the title to that patent?

A. Mr. Walker was appointed Trustee to hold the patent for Mr. R. T. Spencer and his associates, as the one party; and myself, as the other.

Q. 237. After the Spencer contract was forfeited, did Mr. Walker convey the patent to you in pursuance of his trust; and if so, about when did Mr. Walker make that conveyance?

A. Mr. Walker transferred the patent back to me about the Spring of 1898.

Q. 238. You stated in reply to Q 11, that after the Spencer contract was forfeited, you made a contract with Herman Elsas in 1899, relevant to paper bag machinery; and that Mr. Elsas afterwards transferred that contract,

with your consent, to the Continental Paper Bag Company, and that it continued in force until June, 1902. Now, please to state whether that Elsas contract covered your patent, No. 598,497, and the machine which you had built and then owned under that patent?

A. Yes.

Q. 239. What did that contract provide you were to do about building more machines according to that patent; and what, if anything, did you do during the time of that contract toward building more machines according to that patent, No. 598,497?

Objected to as immaterial and irrelevant, and imcompetent as calling for the contents of a written instrument.

Question withdrawn.

Q. 240. What, if anything, did you do during the time of that contract, toward building more machines under that patent. No. 598,497?

A. After making an agreement with Mr. Herman Elsas, a new set of construction drawings of the two to five pound machines was made, and a model machine built, at the Garvin Machine Works, in New York City; and when that machine was completed, the same was sent to Elkhart, Indiana, and twenty-seven machines like that model were built and sent to Rumford Falls, Maine, to be set in operation. In the meantime, four other sets of drawings were completed and more machinery built according to these drawings, so that in June, 1902, about fifty-eight machines were at Rumford Falls, in operation.

Q. 241. Please designate the sizes of bags these fifty-eight machines were adapted to make, by mentioning the number of pounds of material the different sizes of bags made by those machines, were calculated to hold?

A. One-quarter, one-half, one, one and one-half, two, three, four, five, six, seven, eight, ten, twelve, fourteen, sixteen, twenty, twenty-five, thirty, thirty-five.

Q. 242. Please state whether the machine you made

during the time of the Spencer contract, was like the drawings of the Claussen patent, No. 598,497, in respect of the tucker plate, 75, having its trunnions co-incident with one of its edges? Or whether the tucker plate on the Spencer machine differed in some respect from that shown in the Claussen patent, No. 598,497?

A. It differed in some respects from the tucker plate 75 as shown in the patent, No. 598,497.

Q. 243. Please to look at the tucker plate of the Claussen & Mortson patent, No. 635,090, and state whether the tucker plate of the Spencer machine was like that Claussen & Mortson tucker plate.

A. It was like the tucker plate shown in the patent No 635,090.

Q. 244. I do not find any expression, intimation or implication in the Claussen & Mortson patent, that the tucker plate shown in that patent was intended to be claimed as new by Claussen & Mortson jointly; but I ask you to state who it was that added to the tucker plate of the Claussen patent, No 598,497, the upward extension and its hook, which is shown in the Claussen & Mortson patent?

A. I don't remember.

Q. 245. Did George Mortson begin to co-operate with you toward producing the improvements shown and claimed in the Claussen & Mortson patent, No. 635,090, before you began building the Spencer machine, or while you were building the Spencer machine, or after you had finished the Spencer machine?

A. Mr. Mortson and myself have been very intimate friends for a great many years, and while at the time I was building the Spencer machine, he would come down Sunday mornings and suggest whatever he could to aid me and help me, in doing what he could.

Q. 246. Now, in respect of the upward extension of the tucker plate, with its hook, is your uncertainty as to its

origin due to your not remembering whether Mr. Mortson may have suggested it to you some Sunday morning while you were building the Spencer machine ; or is that uncertainty due to some other circumstance ?

Objected to as leading.

A. It is due to the fact that I don't remember.

Q. 247. Is it possible that somebody other than Mortson or yourself suggested that upward extension and that hook ; or are you sure that it was suggested either by Mortson or you ; one or the other ?

A. I am quite sure that it was suggested by either myself or Mr. Mortson.

Q. 248. Now, I call your attention to the Claussen & Mortson patent, No. 635,090, and I ask you to state whether the model machine had been built at the Garvin Machine Works, at the time the application for that patent was filed on June 17, 1899 ?

Objected to as immaterial.

A. The Garvin machine was built in the spring and summer of 1899.

Q. 249. What did Mortson have to do with building the Garvin machine, or with making the working drawings for it ?

A. He had nothing to do whatsoever.

Q. 250. State whether the tucker plate of Figure 19, of the Claussen & Mortson patent, No. 635,090, was put into the Garvin machine when it was made ?

A. Yes, it was

Q. 251. Now please to look again at the Claussen & Mortson patent, No. 635,090, and particularly at the diamond fingers 70 and 71 of that patent; and state whether those diamond fingers were ever put into the Spencer machine ?

A. No, they were not.

Q. 252. Were they put into the Garvin model machine when it was made in 1899 ?

A. Yes, they were.

Q. 253. Were those diamond fingers put into any or all of the fifty-eight machines which were sent to the Rumford Falls factory?

A. Yes, they were put in all the machines.

Q. 254. What, if anything, did George Mortson have to do with developing the fifty-eight Rumford Falls machines, other than to co-operate with you, in inventing the improvements claimed in the Claussen & Mortson patent, No. 635,090?

Objected to as tending to cause confusion as it does not appear that the Garvin model machine was not built from working drawings embodying the improvements of the Claussen & Mortson, patent, No. 635,090.

A. Mr. Mortson had nothing to do with building or developing the fifty-eight machines at Rumford Falls; but I remember distinctly that we were bothered a great deal by the front end of the diamond being torn off on the Spencer machine. So we invented the diamond fingers to support the front end of the diamond; but the diamond fingers were never added to the Spencer machine.

Q. 255. Please to look at the Claussen patent, No. 598,497, and particularly at lines 99 to 109 inclusive of page 4; where the inward oscillation of the carrier and the forward oscillation of the tucker plate, are explained as co-operating to unfold the blank and produce the diamond form; and please to notice that the patent does not state how the tucker plate is to swing back again to its former position to operate upon the next blank; and please to notice a fact that has been pointed out by the complainant's expert, Dayton, that there ought to be a recess or mutilation in the surface of the cylinder 55, at about the location of the numeral 55, in Figure 4, and also at about the same location of the numeral 57, in the same figure, for the purpose of giving room for the tucker plate to swing backward after completing its work on one bag blank, in order that

it may perform its function on the next bag blank; and having noticed those points, please to make your own explanation of that subject, by stating whether such recesses must be made in the periphery of the cylinder, and if so, why you did not show them in the drawings of the patent; and then proceed to state whether such recesses were made in the rotating conveyer of the Spencer machine?

Objected to in so far as it constitutes testimony by defendant's counsel.

A. Yes, such a recess must be made in the periphery of the cylinder at the two places indicated in the question, and those recesses were made in the original drawings from which the Spencer model was built. As I remember distinctly, when building the machine, a certain part of the cylinder broke, and a new cylinder had to be substituted, and at the same time I took advantage of lengthening that recess about one inch, on the circumference of that cylinder, so as to ease up that portion of the cam which causes to turn the tucker plate back into its original position, so that the next bag blank can be operated upon.

Q. 256. How did it happen that those obviously necessary recesses were not shown in the Patent Office drawings of the Claussen patent, No. 598,497, though they were shown in the working drawings which you made, and from which you bnilt the Spencer machine?

Objected to for the reason that it does not appear, and there is no evidence tending to show that the recesses referred to, were "obviously necessary."

A. The Patent Office drawings were made without previously making any sketch which combines the tucker plate and the carrier pivoted to the conveyer, but took the cylinder and the carrier, as shown in the Claussen Exhibit, No. 3, and adapting the tucker plate, as shown in the Claussen Exhibit, No. 2, to co-operate together, and in the Claussen Exhibit No. 3, no such recess or recesses are necessary; and it was therefore an oversight on my part,

that they were not put in the Patent Office drawings; but the recesses were put in on the construction drawing of the Spencer machine.

Q. 257. Mr. Dayton, in his deposition, expressed the opinion that the absence of the needed recesees from the Patent Office drawings, indicated that you had not built a machine according to these drawings, at the time you made those drawings. Now please to state whether you had built such a machine at that time?

A. No.

Q. 258. I now call your attention to the Claussen & Mortson patent No. 635,090, and particularly to the ironing plate 120, which ironing plate is best shown in Figure 1 of the patent, and is mentioned in Claim 11 of the patent as one of the elements of that claim; and I ask you to state whether that ironing plate was put into the Spencer machine, or into the first Garvan machine, or into either of those two machines?

A It was put into the Spencer machine, and also in the Garvan machine; and all machines built up to the present time, as far as I know.

Q. 259. I now call your attention to the finger 143, shown in the Claussen & Mortson patent No. 635,090, and mentioned in Claims 12, 13, 14 and 15 of the patent, as one of the elements of each of those claims; and I ask you to state whether that finger was put in the Spencer machine and the Garvan machine, or either of them?

A. It was put on the Spencer machine, and also on the Garvan machine; but on the Garvan machine it was taken off again.

Q. 260. To what extent has that finger been put into the fifty-eight machines at Rumford Falls?

A. It has been applied to the six, seven, eight and ten pound machines, as far as I know.

Q. 261. Now please to look at Figure 3 of the Claussen & Mortson patent, and particularly at the general outline

1006

of the frame of the machine which is shown in that figure; and state whether any of the machines of the Continental Paper Bag Company had frames of the same outline, so as to present the same appearance to the eye.

A. Yes, somewhat similar, but not the same.

Q. 262. You have testified that you began making the working drawings for your first machine under the Claussen patent. No. 598,497, about February 1, 1897, and that you ended your work for the Continental Paper Bag Company about June 21, 1902; now please to state about what proportion or quantity of the intervening five years and five months you occupied in developing the invention of your patent, No. 598,497, into the paper bag machine plant of fifty-eight machines in Rumford Falls, Maine.

Objected to as misleading, for the reason that no reference is made to the co-operation of Mr. George Mortson, joint patentee of Claussen & Mortson of patent No. 635,090, for improvement on the patent to Claussen, No. 598,497.

A. I should think I used nineteen-twentieths of my time on inventing, improving and building these bag machines; and lost about one-twentieth, which was the time the Spencer machine was tied up, and they would not decide either way, whether to take it or not.

Q. 263. About how many sheets of working drawings were made for the fifty-eight machines that went to Rumford Falls?

Objected to as immaterial.

A. About two hundred and fifty sheets of working drawings.

Q. 264. About how large was each of those sheets as compared with Claussen Exhibit, No. 3, for example, which appears to be two feet by three feet?

Objected to as immaterial.

A. Most of the sheets were drawn on a size of paper

twenty-seven by forty inches; others on twenty-seven by twenty.

Q. 265. To what extent did you participate in making those two hundred and fifty sheets of working drawings?

A. These two hundred and fifty sheets of drawings constituted five sizes of machines, and three of the sizes were made by myself.

Q. 266. Did George Mortson take any part in developing that paper bag machine business, outside of what he did toward producing the joint inventions upon which on June 17, 1899, he and you applied for the Claussen & Mortson patent No. 635,090?

A. No.

Q. 267. When, if ever, did Charles F. Smith begin to co-operate with you in producing any of the machines which were built under the Claussen patent No. 598,497, and the Claussen & Mortson patent No. 635,090?

Objected to as leading.

A. In January 29, 1899. I think it was that date.

Q. 268. How long did he continue to co-operate with you in that undertaking?

A. About two months.

Q. 269. What did he do in that undertaking during those two months?

A. He helped me in designing and making construction drawings of the two to five pound machine, which machine was made and built at the Garvan Machine Works, and which I have already spoken of as the Garvan machine.

Q. 270. When, if ever, did Charles F. Smith renew his co-operation with you in the work of producing and building paper bag machines under the Claussen patent No. 598,497, and the Claussen & Mortson patent No. 635,090?

A. It was about August 3, 1899.

Q. 271. How long did he continue that co-operation from that time?

A. He co-operated until June, 1902, when I finished my work with the Continental Paper Bag Company.

Q. 272. Now, Mr. Claussen, please to set aside your modesty for once, if you can, and state the magnitude and difficulty of the work of producing those fifty-eight paper bag machines which have been sent to the Continental factory at Rumford Falls?

A. It was the biggest undertaking that I ever had to deal with, and I shouldn't care to do it again.

Q. 273. Please to go with me into my model-room, and look at a machine which is there; and state, if you know, what machine it is?

A. It is a machine of the Continental Paper Bag Company, and one of those built under the patents No. 598,497 and No. 635,090.

Q. 274. What is the size of that machine in my model-room in respect of the capacity of the bag it produces?

A. It is either one, or one and one-half pounds.

Q. 275. Am I right in understanding that that machine was the product of your own invention, and designing, with such assistance as you received from Mr. Mortson, in inventing the particular improvements of the Claussen & Mortson patent, No. 635,090, and with such assistance as you received from Mr. Charles F. Smith, in making the construction drawings and superintending the building of the fifty-eight machines, and with such assistance as you received from Mr. Charles F. Smith in some details of the machine as it now exists?

Objected to as leading.

A. Mr. Smith had the greater part to do with this particular machine which you have in your model-room; but the rest of the machines is my invention besides the assistance I had from Mortson, Smith and the draftsmen that were in our employ.

Q. 276. Did you ever see this particular machine in my model-room, until I showed it to you a few minutes ago?

A. No, I did not.

Q. 276½. What do you mean by saying that Mr. Smith had most to do with that particular machine?

A. The quarter, to one and one-half, pound machines were designed here in New York, under Smith's direction; and during the time in which they were built, at Elkhart, I was in Rumford Falls, or Hartford, and so Mr. Smith was sent out to Elkhart from time to time, to give such instructions as were necessary; so I think I am justified in saying that this particular machine was designed by Mr. Smith; but the twos, fives, sixes, and tens, twelves, and sixteens, are my productions.

Q. 277. Please to specify in general terms, whatever points of difference exist in the machine in my model-room, as compared with those of the Continental machines, the construction of which you personally superintended?

A. The differences are first: a change in the tucker plate; and second: the ironing plate was omitted and the rotating flattening roll was substituted.

Q. 278. Please to look at the Claussen & Mortson patent No. 635,090 and particularly at Figure 19 of that patent which purports to show the tucker plate and the side nippers 103 and 104, working in connection with that tucker plate, and the recriprocating mechanism for moving those side nippers toward and from each other and also for oscillating them upon their own axes; and state whether that figure corresponds to the tucker plate and side nippers and oscillating mechanism in the Rumford Falls machines which you personally built?

A. Yes.

Q. 279. Now, who planned or invented the particular plan of tucker plate, and the side nippers and actuating mechanism for the side nippers, which are in the machine in my model-room?

A. I think Charles F. Smith.

Q. 280. Who substituted the ironing roller which

appears in the machine in my model room, for the ironing plate 120 of the Claussen & Mortson patent, which you have said was put on all the Rumford Falls machines that were constructed by you?

A. I think it was Charles F. Smith.

Q. 281. Now please to contemplate the machine in my model-room, and state whether you regard it as the best machine that was ever built for manufacturing self-opening square paper bags on the one hand; or whether you assign some lower rank to it, than that in the order of merit?

A. No.

Q. 282. What machine do you consider superior to it?

A. The machines at Rumford Falls, built under the old Claussen drawings.

Q. 283. Do you regard the machines at Rumford Falls, which were built under your direction, under the Claussen patent No. 598,497, and the Claussen & Mortson patent No. 635,090, to be the best machines that were ever built for manufacturing self-opening square paper bags; or do you assign some lower rank than that to those machines?

Objected to as immaterial and incompetent, and as calling for the opinion of the witness, and the witness is advised that in absence of an agreement with the defendant's counsel, he is not bound to answer unless he thinks it advisable, although complainant's counsel has no objection to his answering if he deems it advisable.

A. I prefer not to say anything about those machines.

Q. 284. Have you ever seen the Smith tucker plate and tucker plate nippers, and the Smith ironing roller actually at work in a paper bag machine, making paper bags; or is your knowledge of those mechanisms confined to inspecting them on the machine in my model-room?

Objected to as indefinite in use of the technical terms.

A. I have seen the Smith tucker plate and grippers, and roller ironing plate, applied to a sixteen pound machine in Hartford, in operation, where the machine was turned by

hand, making poor bags; but have not seen them running by power.

Q. 285. Did that event occur when that sixteen pound machine was being tested in the Woodward & Rogers factory, where it had been made?

Objected to as leading.

A. Yes.

Q. 286. May the poorness of the product have been due to the machine being new and not yet perfectly adjusted?

Same objection.

A. It might have been.

Q. 287. It is possible, is it not, that an extended trial might show that the Smith tucker plate and tucker plate grippers, and the Smith ironing roll, will work as well as the Claussen & Mortson tucker plate and tucker plate grippers and the Claussen & Mortson ironing plate?

Same objection, and immaterial.

A. It might; but it might not, either.

Adjourned until Friday, December 12, 1902, at 11 o'clock in the forenoon.

Friday, December 12, 1902, 11 o'clock A. M. Met pursuant to adjournment; counsel present as before.

Q. 288. What corporation is the Union Bag and Paper Company, by which you are employed at present, under the contract of November 22, 1902?

Objected to as incompetent and immaterial.

A. It is a corporation having an office at No. 1 Broadway, New York City.

Q. 289. Is that corporation engaged in manufacturing self opening square paper bags?

A. Yes, it is.

Q. 290. What machines does that corporation use for that purpose?

Objected to as immaterial and incompetent.

A. From what I understand, they use the Stilwell machines, and the Lorenz & Honiss machines.

Q. 291. By the Stilwell machines, do you mean those Stilwell machines of the Stilwell patents, Nos. 407, 794 and 417,346?

Same objections.

A. Yes, I do.

Q. 292. By the Lorenz & Honiss machines, do you mean the machines of the Lorenz & Honiss patent, No. 361,951?

Same objections, and also as leading.

A. Yes, I do.

Q. 293. What relations exist between the Union Bag & Paper Company, and the Eastern Paper Bag Company, as far as you know?

Objected to on the ground that it has not been shown that the witness has any knowledge on the subject, or has ever heard of the Eastern Paper Bag Company.

A. I do not know of any relations which exist between the Union Bag & Paper Company, and the Eastern Paper Bag Company.

Q. 294. Please to mention all the corporations you know of, which are engaged in the business of manufacturing the self-opening square paper bags which you have spoken of as the Deering bag?

Objected to as immaterial and incompetent, and as calling for hearsay evidence.

A. The Continental Paper Bag Company, at 61-63 Varick St., New York City; the Union Bag & Paper Company, 1 Broadway, New York City; the Western Paper Bag Company, Batavia, Illinois; the Hollingsworth & Whitney Company, Boston, Massachusetts.

Q. 295. What machine has been used for that purpose by the Western Paper Bag Company?

Objected to as immaterial and incompetent.

A. I understand the Western Paper Bag Company

operated the machine under the Murchie patent, No. 540,556.

Q. 296. Do you know whether the Western Paper Bag Company's business has now been absorbed by the Union Bag & Paper Company, and whether the Murchie machines, which were formerly used by the Western Paper Bag Company, are now being run by the Union Bag & Paper Company?

Objected to as immaterial, irrelevant and incompetent, as the understanding of witness as to what may or may not be the fact, is not competent evidence.

A. No, I do not.

Q. 297. What machines have been used by the Hollingsworth & Whitney Company, to manufacture the Deering self-opening square paper bags?

Same objections.

A. The Stilwell machines previously mentioned.

Q. 298. Which of the corporations you have mentioned as being engaged in manufacturing the Deering self-opening square paper bags, leads the other corporations in respect of the number of machines run, and the number of bags produced?

Objected to as immaterial, irrelevant and incompetent; that the witness has had or has now any business connection with any of the Companies mentioned, except the Union & Continental Companies, and also because it has not been shown that his past or present position when in the employ of these two Companies, was such as to enable him to testify on this subject.

A. From what I understand, the Union Bag & Paper Company leads the list previously mentioned, in manufacturing self-opening square bottom bags.

Q. 299. Are the Continental Paper Bag Company, and the Union Bag & Paper Company, competitors in this business, on the one hand, or are they allied together in some way, on the other hand?

Objected to as incompetent, immaterial, irrelevant and leading. The witness is not or has not been an officer of these Corporations so far as this record shows.

A. From what I understand, they are competitors.

Q. 300. Do you or do you not understand that about the year 1899, the Union Bag & Paper Company absorbed the Consolidated S. O. S. Bag Company, and absorbed or allied itself with every other manufacturer of Deering S. O. S. Paper Bags, then producing such bags in the United States; and has since that time been running three or four hundred Stilwell paper bag machines, or Lorenz & Honiss paper bag machines, and has been making more than ten million self-opening square paper bags per day ever since it thus secured possession of those Stilwell and those Lorenz & Honiss paper bag machines?

Objected to as leading, immaterial, irrelevant and incompetent. As appears by this record, the witness was not, at the time mentioned, to wit, 1899, in the employ of the Union Bag & Paper Company, and therefore, can have no knowledge on the subject, and the "understanding" of the witness upon matters stated in the question is objected to as calling for hearsay evidence.

Mr. Walker states to the Court that it is not the purpose of this line of inquiry to prove the facts; but it is the purpose to prove the witness' understanding of the facts, which understanding is material and proper to be proved as a fact in itself, for reasons which ought to be apparent to counsel for the complainant.

Complainant's counsel repeats his objection, and cannot see how the witness' understanding of the proposed facts is material or relevant since it does not effect the credibility of the witness.

Mr. Walker explains to the Court that counsel for the complainant in this case has advised the witness in respect of many of the questions put to him by defendant's counsel, that the witness need not answer those questions, and

that thereupon the witness has declined to answer those questions, though the witness is testifying on behalf of the defendant; and defendant's counsel wishes to be permitted to show that these singular facts are to be accounted for by the fact that the witness is in the employ of the principal competitor of the defendant, and that that principal competitor is well known to the witness to have a strong motive for desiring that this suit shall be decided against the defendant.

Complainant's counsel calls attention to the fact that in every instance in which he has advised the witness that he was not compelled to answer the question propounded by defendant's counsel, the witness was also advised that complainant's counsel had no objection to his answering the question if the witness decided to do so, but the advice was given to the witness in order that the witness might know his rights in the premises.

Defendant's counsel asks complainant's counsel to state on the record, by what authority he presumed to interfere with the direct examination of the defendant's own witness by volunteering advice to that witness that he might decline to answer many of the questions put to him on direct examination.

Complainant's counsel replies that he has not interfered with the direct examination of this witness, and any advice that he has given the witness, was given on his own authority.

A. Yes, I understand that the Union Bag & Paper Company absorbed the Consolidated S. O. S. Company about 1899, and that they have been running the Lorenz & Honiss machines, and Stilwell machines; but do not know how many machines they are running, nor how many self-opening square Deering bags they are producing.

Q. 301. Do you, or do you not understand that the business of the Union Bag & Paper Company, in pro-

ducing Deering self-opening square paper bags, is many times larger than the business of the Continental Paper Bag Company, in producing Deering self-opening square paper bags?

Objected to as leading, incompetent, immaterial and irrelevant since the "understanding" of the witness is mere heresay evidence,

A. I know that the number of Lorenz &Honiss machines that were turned over at the time of the consolidation, were more than the Continental Company has in operation. As far as the Stilwell machines are concerned, I do not know or have ever heard how many they have in operation.

Q. 302. I am not inquiring for your knowledge; but I am inquiring for your understanding, and that understanding is proper for you to state, whether it is perfectly correct or not. Please therefore to state whether you understand that the business of the Union Bag & Paper Company, in making Deering self-opening paper bags, is at least five times greater than the business of the Continental Paper Bag Company, in making Deering self-opening bags?

Objected to as leading, incompetent, immaterial, and as already answered in the last answer.

A. Yes, I understand it is.

Q. 303. Do you or do you not also understand that the Union Bag & Paper Company has a powerful motive to desire this suit to result in an injunction against the defendant, in order to stop all the defendant's self-opening square paper bag machines, and to thereby get rid of the competition of the defendant in the business of making and selling Deering self-opening square paper bags?

Objected to as leading, immaterial and incompetent. The "understanding" of the witness, as to this supposed fact, is not proof or competent proof that any such alleged motive exists.

A. Yes, I understand so.

Q. 304. What person or corporation owns the Claussen patent, No. 598,497, now?

Objected to on the ground that it is calling for secondary evidence, and as a conclusion of the witness, and also as immaterial.

Question withdrawn.

Q. 305. Please state your understanding as to what person or corporation owns the Claussen patent, No. 598,497, now?

Objected to as immaterial and incompetent, and as calling for secondary evidence. The "understanding" of the witness is not competent evidence.

A. The Continental Paper Bag Company.

Q. 306. Please state your understanding as to what person or persons, corporation or corporations, as the case may be, now own the Claussen & Mortson patent, No. 635,090?

Same objections.

A. I understand the patent, No. 635,090, is owned by the Union Bag & Paper Company, and also by the Continental Paper Bag Company, together.

Q. 307. How do you understand it happened that those two corporations own that patent together?

Same objections. So far as this record shows, the witness is not and never has been an officer of either of these two Companies, and, therefore, is not and never has been in a position to know or to understand the matter inquired about.

A. The patent is a joint patent, and at the time of filing the application therefor, one-half of it belonged to me, and the other half belonged to Mr. Mortson; and after the same was issued, I assigned my half interest to the Continental Paper Bag Company, and I understand that they own that interest at the present time. I also under-

stand that Mortson's interest was assigned to the Union Bag and Paper Bag Company.

Direct-examination closed.

Complainant's counsel states that at yesterday's session, a certain machine was referred to in the record, and the witness was interrogated concerning the same in Qs. 273-281, and complainant's counsel supposed that more questions would be put to the witness concerning the machine by defendant's counsel, since he had not offered the said machine in evidence or marked the same for identification. But since no further reference has been made to that machine, and since defendant's counsel has not offered the same in evidence, or marked the same for identification, complainant's counsel now further objects to these questions on the ground that they relate to a machine which is not before the Court

Mr. Walker states to the Court that the machine of the Continental Paper Bag Company, which was shown to the witness, when putting Q. 273, and which was the subject of testimony by the witness, in answer to Qs. 273 to 281, inclusive, will be shown to complainant's counsel at any and all times, upon reasonable request, during the taking of evidence in this case for the defendant, and also during the taking of evidence in this case for the complainant; and that that machine will be identified hereafter and explained at length, by another witness and one who was present in the model room when it was shown to this witness.

But Mr. Walker states that the machine weighs about two tons, and is composed of many hundreds of parts. The great size of the machine makes it impracticable to offer it in evidence and file it in court; and the great complexity of the machine makes it impossible of identification by simply "marking it for identification." So also the great value of the machine for manufacturing self-opening

square paper bags, renders it undesirable for the defendant to part with its control.

For these reasons, Mr. Walker suggests that the best way to manage the machine, is to stipulate that the machine shall be open to the inspection of attorneys and experts on both sides, at all reasonable times upon reasonable notice; and that defendant's counsel shall be responsible for its custody until the hearing of the case, and shall also undertake to make sure that no change shall be made in the machine, without consent of the complainant's counsel, from the time it was shown to this witness yesterday, until the time of the hearing of the case.

Complainant's counsel agrees to the foregoing.

Adjourned until Monday, December 29, 1902, at 11 o'clock in the forenoon.

Monday, December 29, 1902, met pursuant to adjournment.

On account of the engagements of defendants' counsel, in court, a further adjournment is taken until Monday, January 5, 1903, at 11 o'clock A. M.

Monday, January 5, 1903, 11 o'clock A. M. Met pursuant to adjournment.

Present—Mr. L. F. H. Betts, counsel for the complainants, and Albert H. Walker, counsel for the defendants, and Edward E. Claussen, the witness.

Mr. Walker states that when he closed the direct examination on December 12, 1902, he had overlooked one mechanical sketch, which had been in his possession for about six months, and had been made by the witness at some previous time, and that he desires now to present that sketch to the witness, and take his testimony relevant thereto, before the cross-examination begins.

Complainants' counsel calls attention to the fact that

the testimony of this witness was commenced on December 8, 1902, one month ago, and he protests against any prolongation of the evidence to be presented upon the part of defendants herein ; but in order to expedite the hearing of this cause and assist the defendants in every way in its timely presentation of its proofs, complainants' counsel consents to the reopening of the direct examination of this witness, for the purpose indicated by Mr. Walker.

Q. 308. Please to look at a pencilled sketch I now show you, and state, if you can, who made that sketch, and state when it was made?

A. I made the sketch, November 6, 1895.

Q. 309. Please to state what relation, if any, exists between this pencilled sketch and Claussen Exhibit No. 3?

Complainants' counsel objects to the question as immaterial. The only material matter is the question as to what the sketch shown the witness shows, in and of itself.

The sketch dated November 6, 1895, is a free hand sketch ; whereas the Claussen Exhibit No. 3 is a drawing worked up a little bit more elaborate ; but mechanisms of the sketch are the same as the drawing, with perhaps a slight variation.

Mr. Walker offers in evidence the pencilled sketch of November 6, 1895, and requests that it be marked "Claussen Exhibit No. 5," and it is accordingly so marked.

Complainants' counsel objects to the same as immaterial, irrelevant and incompetent.

Q. 310. I asked you in Q. 193, who invented the combination of a rotating conveyer and an oscillating carrier pivoted to that conveyor, and oscillating toward and from the center of the rotating conveyer ; and in response to that question you answered that you invented that combination. In Q. 194 I asked you how early you made that invention, to which you replied by saying that it was between November 23, 1895, and January 17, 1896. In Q.

195 I asked you what evidence on paper exists that you made that invention between those two dates; to which inquiry you responded by specifying Claussen Exhibit No. 3. Now please to state what correction, if any, you have to make in that testimony, in view of Claussen Exhibit No. 5, which is the pencilled sketch made November 6, 1895?

Objected to on the ground that Mr. Walker is proceeding to impeach the testimony of his own witness.

Mr. Walker states to the court that he has the utmost confidence in the honesty and good faith of this witness, and would never think it possible for anyone to impeach his testimony on any subject at any time; and that he is now simply giving the witness an opportunity to correct his former evidence on questions of dates, in the light of written memoranda, which was not before the witness when he gave his testimony in December, and which had not been in his possession at that time for about six months, and which presumably was out of his recollection when he answered Qs. 194 to 197 of the present deposition.

A. I made the invention of the combination of the rotating conveyer and the oscillating carrier, November 6, 1895.

Q. 311. I asked you in Q. 187 who invented the combination of a tucker plate vibrating upon trunnions, not substantially on the line with its defining edge, and devices to hold the upper ply of the tucked paper tube against the face of the tucker plate, between the line of its trunnions and the line of its defining edge. And to that inquiry you answered that you made that invention. In the next question I asked you how early you made that invention, and you replied, November 22, 1895. In the next question I asked you what evidence on paper exists, as far as you know, that you made that invention on that day; to which you replied by specifying Claussen Exhibit No. 1. Now,

please to state what change, if any, or what correction, if any, you have to make in that testimony, in view of Claussen Exhibit No. 5, which is the pencilled sketch made November 6, 1895?

Complainants' counsel makes the same objections.

A. The origin of the tucker plate is November 6, 1895.

Q. 312. What evidence, on paper, is now before you which shows that you invented on November 6, 1895, a tucker plate vibrating upon trunnions not substantially on a line with its defining edge?

Same objections.

A. The Claussen Exhibit No. 5, dated November 6, 1895.

Q. 313. What evidence on paper is now before you that you invented on November 6, 1895, the combination of a rotating conveyer, and an oscillating carrier pivoted to that conveyer, and oscillating toward and from the center of rotation of the conveyer.

Complainants' counsel makes the same objections, and further objects to the form of the question as leading, since the inquiry should be as to what is or what is not shown in Claussen Exhibit No. 5.

A. The Claussen Exhibit No. 5.

Q. 314. Please to look at the tracing I now show you, and state of what sketch or drawing it is a copy?

A. It is a copy of the Claussen Exhibit No. 5; except that the name at one end of Claussen Exhibit No. 5, and the date and other writing at the lower right hand corner of Claussen Exhibit No. 5, is not on the tracing.

Mr. Walker offers in evidence the tracing mentioned in the last question and answer, and requests that it be marked Claussen Exhibit No. 6, and it is accordingly so so marked.

Objected to as immaterial, irrelevant and incompetent.

Q. 315. Please to take a pen and some ink, and make

some marks upon Claussen Exhibit No. 6, to indicate sundry of the devices shown thereon ; and in so doing, please to indicate the rotating conveyer by the numeral 6 ; and please to indicate the oscillating carrier by 6a; and please to indicate the cam which causes that carrier to oscillate, by the numeral 8; and please to indicate the grippers which hold the tucked paper tube down upon the oscillating carrier by the numeral 20 ; and please to indicate the pivot by which the oscillating carrier is pivoted to the rotary conveyer, by the numeral 19 ; and please to indicate the oscillating tucker plate by the letter P ; and please to indicate the trunnions upon which that tucker plate oscillates, by the letter D.

Objected to as leading.

A. I have done as requested in the last question.

Q. 316. Now please to compare Claussen Exhibit No. 3 and Claussen Exhibit No. 5 carefully together and state wherein, if at all, they differ in respect of showing or not showing a rotating conveyer with an oscillating carrier pivoted to that conveyer, and provided with one front gripper and two side grippers to hold the tucked paper tube down upon that carrier.

Complainants' counsel objects to the question as leading, and also as immaterial and irrelevant.

A. They do not vary in any of those respects.

Q. 317. In what respects, if at all, do Claussen Exhibit No. 3 and Claussen Exhibit No. 5 differ in regard to the tucker plate, oscillating upon trunnions out of line with its defining edge ?

Objected to as leading and immaterial and irrelevant. It is submitted that the inquiry should be as to what is, or what is not shown in Claussen Exhibit No. 5.

A. They do not differ in that respect.

Q. 318. Please to state what mechanism is shown in Claussen Exhibit No. 5 ; not including the creaser and paster mechanism at the upper left-hand corner of that ex-

hibit, and not including the Vee plate mechanism at the lower left-hand corner of that exhibit, and not including the clip motion at the top of the exhibit, and not including the pulley-shaft near the middle of the exhibit, nor the four circles at the left of that pulley shaft, nor the two or three circles at the right of that pulley-shaft ?

A. The mechanism that is indicated in Claussen Exhibit No. 5, is the rotating conveyer, having a carrier pivoted thereto, which is provided with a front-clip, and the two side-clips, a cam, concentric with the conveyer, and a roll attached to the carrier and engaging the face of the cam, by which, as the conveyer rotates, the carrier is oscillated toward and from the center of the conveyer, a tucker plate pivoted on trunnions which do not coincide with the defining edge of the tucker-plate, sectors by which the tucker-plate is vibrated by a roller fastened to an extension on one of the sectors, and also the Vee plate.

Q. 319. In Claussen Exhibit No. 5, does the oscillating carrier oscillate inwardly from the periphery of the rotating conveyer and back again ; or does it oscillate outwardly from the periphery of the rotating conveyer, and back again ?

Objected to as leading.

A. The carrier oscillates inwardly toward the center and backwardly, so that the outside of the carrier coincides with the periphery of the conveyer.

Q. 320. What do you say of the equivalency or otherwise of the oscillating carrier of Claussen Exhibit, No. 5, and the oscillating carrier of Claussen Exhibit No. 3; in view of the fact that the oscillating carrier of Clau-sen Exhibit No. 3, oscillates radially outward from the periphery of the conveyer, and back again ; whereas, the oscillating carrier of Claussen Exhibit No. 5, oscillates radially inward from the periphery of the carrier and back again.

Objected to as leading.

A. They are equivalent.

Q. 321. You answered, Q. 198, by saying that it occurred to you at the time you made Claussen Exhibit No. 3, to put into one machine, a tucker plate vibrating upon trunnions not substantially on a line with its defining edge, and having devices to hold the upper ply of the tucked paper tube against the face of the tucker plate, and also to put into the same machine a rotating conveyer, having an oscillating carrier pivoted thereto. Now please to state what change or correction, if any, should be made in that testimony now that Claussen Exhibit No. 5, is brought to your attention?

Complainants' counsel objects to the question as leading, and also because it seeks to impeach Mr. Walker's witness' testimony.

A. No, I cannot think of any change.

Q. 322. When, if ever, prior to the time you made Claussen Exhibit No. 3, did it occur to you to put into one machine, a rotating conveyer having an oscillating carrier pivoted thereto, and a tucker plate vibrating upon trunnions, not substantially on a line with its defining edge?

Same objections.

A. November 6, 1895.

Q. 323. What evidence on paper, is now before you, or is known to you, which shows that that event occurred on November 6, 1895?

Same objections.

A. The sketch I have before me, Claussen Exhibit, No. 5.

Q. 324. How do Claussen Exhibit No. 3, and Claussen Exhibit No. 5, agree or disagree, in respect of the means shown therein, for holding the upper ply of a tucked paper tube against the face of the tucker plate?

Objected to on the ground that it is immaterial; the inquiry should be as to what is or what is not shown in Claussen Exhibit No. 5.

A. In both the Exhibits, Claussen Exhibits Nos. 3 and 5, mechanisms are shown which clamp the upper plys of the tube to the Vee plate; the only difference being that the center of oscillation in Claussen Exhibit No. 3, is at right angles to the tucked paper tube; and in Claussen Exhibit No. 5 the axis of oscillation of the clips is 45 degrees to the tube.

Q. 325 Now, confining your attention to the rotating conveyer: the oscillating carrier, the front clip and the side clip on the oscillating carrier; the oscillating tucker plate, and the stationary Vee plate, and the clips which hold the paper, upon the upper side of that Vee plate; please to state what difference or differences exist between Claussen Exhibit No. 3 and Claussen Exhibit No. 5?

Complainant's counsel objects to the question as immaterial, since each exhibit should be considered as a whole.

A. There is no difference.

Q. 326. Now, I call your attention to the creaser and paster mechanism shown at the upper left hand corner of Claussen Exhibit No. 5; and I ask you to state where, if at all, that mechanism is shown in Claussen Exhibit No. 3?

A. It is shown in Claussen Exhibit No. 3 by the numerals 21 and 22.

Q. 327. Now, please to state where, if at all, in Claussen Exhibit No. 3 is shown the clip-motion mechanism which appears at the top of Claussen Exhibit No. 5?

A. That clip-motion is not shown in Claussen Exhibit No. 3.

Q. 328. Please, now, to look at Claussen Exhibit No. 6 and state what is represented by the lines which are immediately under the numeral 20, and which I will ask you to indicate on that exhibit by marking the numeral 30 thereon.

A. I have done as requested. The numeral 30 indicates a spring casing, the spring of which is inside of the casing, and presses upon a pin held in the side-clip 20.

The numeral 30 indicates mechanism to work the side-clip 20.

Q. 329. How did it happen that your pencilled sketch of November 6, 1895, which is now marked "Claussen Exhibit, No. 5" was over-looked, or otherwise disregarded, when you were giving that part of this deposition which was given in December, 1902?

A. I was requested to look up all the sketches and drawings that I had in my possession, and during the time I was under contract with the Continental Paper Bag Company; and sent such sketches and drawings to Mr. Walker. A few of these sketches were pasted together, and delivered to Mr. Walker, in June, 1902, and Mr. Walker inadvertently overlooked this sketch, and it was not presented to me at the time I gave my first testimony in December, 1902, and I based all my testimony upon the dates of Claussen Exhibit, No. 3 and Claussen Exhibit No. 1.

Q. 330. When you gave your testimony in December, 1902, how did it happen that you did not yourself remember having made the sketch of November 6, 1895; although Mr. Walker had inadvertently overlooked that sketch after you sent it to him in June, 1902, and therefore, did not show it to you in December, 1902?

A. I have made such an innumerable number of sketches, that I forgot this sketch entirely, in December 1902.

Direct-examination closed.

Cross-examination of Mr. Claussen by Mr. Betts:

X-Q. 331. When did you first begin to construct, or have constructed, under your direction, either a model, or a machine embodying Claussen Exhibit, No. 1?

A. February 1, 1897.

X Q. 332 How many machines did you commence to build then, and when was the first one completed?

A. There was only one machine built; and it made merchantable bags on June 16, 1897.

X-Q. 333. When first did you commence to construct, or cause to be constructed under your direction, a model or a machine, embodying Claussen Exhibit, No. 3?

A. There was never a machine nor model built in exact accordance with Claussen Exhibit, No. 3.

X-Q. 334. When first did you construct, or cause to be constructed under your direction, a model or a machine embodying Claussen Exhibit, No. 5?

A. There never was a machine or model constructed exactly to what is shown in Claussen Exhibit, No. 5.

X-Q. 335. When first did you commence to construct, or cause to be constructed under your direction, either a model or a machine for making paper bags, in which there was a rotating conveyer, having an oscillating carrier pivoted thereto, and a tucker plate vibrating upon trunnions, not substantially on a line with its defining edge?

A. On February 1, 1897.

X-Q. 336. When first did you commence to construct, or cause to be constructed under your direction, a paper-bag machine comprising a rotating conveyer, with an oscillating carrier pivoted to that conveyer, and provided with one front gripper, and two side grippers, to hold the tucked paper tube down upon that carrier. I include a model in my inquiry?

A. I started work on one, February 1, 1897.

X-Q. 337. When first did you commence to construct, or cause to be constructed under your direction, either a model or a machine for making paper bags, having a tucker plate vibrating upon trunnions not substantially on a line with its defining edge, and devices to hold the upper ply of the tucked paper tube against the face of the tucker plate between the line of its trunnion and the line of its defining edge?

A. On February 1, 1897.

X-Q. 338. When first did you commence to construct, or cause to be constructed under your direction, either a

machine or a model for making paper bags, comprising a rotating conveyer and an oscillating carrier pivoted to that conveyer and oscillating toward and from the center of the rotating conveyer.

A. On February 1, 1897.

X Q. 339. Referring to your patent, No. 598,497, I observe that you speak of the tucker plate as a "vibrating" tucker plate. While in your testimony in this case, you have spoken of an "oscillating" tucker plate. Do you use these two words as synonymous?

A. Yes, I do.

X-Q. 340. I refer you to your answer to Q. 61, and will ask you to state whether the experiments which you say you made with two rollers similar to that shown in Figs. 14, 15, 16 and 17, of the Appel patent, No. 387,573, to open a paper bag tube, were successful?

A. No, they were not.

X-Q. 341. Why not?

A. It greatly depends upon the size of the rollers in making an experiment, and a great number of details which, if they vary a little in combination with the side clips and front clips, will make a failure of an experiment; whereas, another party that will make more elaborate experiments will succeed.

X-Q. 342. In answer to Q. 69, you stated that the improvements shown in the Lorenz & Claussen patent, No. 410,841, were actually "applied" in some cases to the machines of the Lorenz & Honiss patent, No. 361,951. About how many of these machines were these improvements applied to?

A. I never knew the exact figure; but think about twenty.

X-Q. 343. I now call your attention to Q. 70, and will ask you to state whether the studs 16 and 17 of the Lorenz & Honiss patent, No. 410,842, were applied to the machines of the Lorenz & Honiss patent, No. 361,951?

A. I think they were applied to every machine that was built under the patent, No. 361,951.

X-Q. 344. When did you first show Claussen Exhibit No. 1, to anyone, or explain its contents to anyone?

A. I know and remember well, that during the time I was making the Patent Office drawings for my patent No. 598,497, that Mr. Mortson came into the office, and I explained the arrangement of the tucker-plate in combination with the rotating conveyer and oscillating carrier; but I don't remember ever showing the Claussen Exhibit No. 1 previous to filing the application on July 29, 1896. Very few people came into the office, as at that time I was working in the office of Mr. Des Jardins, who was very particular that no one should come into the office; and he had not less than thirteen keys to the different rooms which I had to go over every night, so that nobody would be able to enter the rooms.

X-Q. 345. Do you remember when you first began to make the Patent Office drawings for your patent No. 598,497?

A. I started soon after I had finished the drawing of the Claussen Exhibit No. 3, and about February 1, 1896.

X-Q. 346. When first did you show Claussen Exhibit No. 3 to anyone?

A. Mr. Des Jardins, on January 17, 1896.

X-Q. 347. When first did you show Claussen Exhibit No. 5 to anyone?

A. I don't think I ever showed it to anybody, till I sent it to Mr. Walker in June, 1902. The sketch is drawn, however, on a piece of paper which Mr. Honiss and myself had cut up by the Case, Lockwood & Brainard Co., of Hartford, just previous to my leaving Lorenz & Honiss' office in October, 1895.

X-Q. 348. Referring now to Claussen Exhibit No. 1, will you please state why the shaft D is shown as mounted in fixed journals, rather than as mounted upon an oscillat-

ing arm; what advantage is there in the arrangement as shown, rather than as mounted upon an oscillating arm?

A. The reason why the shaft D, of Claussen Exhibit No.1 was mounted on a stationary bearing, appeared to me the best in combination with the oscillating carrier pivoted on the conveyer. I do not know as there is any advantage in mounting the shaft on an oscillating arm.

X-Q. 349. Are there any side-forming fingers or grippers provided upon the former or tucker P plate in Claussen Exhibit, No. 3?

A. No.

X-Q. 350. In answer to X-Q. 181, you stated that the Lorenz & Honiss patent, No. 337,966, showed a presser plate vibrating upon trunnions which are on a line with the defining edge of the plate; while in your patent, No. 598, 497, there is a tucker plate vibrating upon trunnions not substantially on a line with its defining edge. What advantage or advantages are there in your arrangement, over that of Lorenz & Honiss, or others, wherein the tucker plate vibrates upon trunnions "on a line with its defining edge"?

A. The bag forms more readily in the way as indicated in patent, No. 598,497, than in the Lorenz & Honiss patent, No. 337,966.

X-Q. 351. How does it form more readily, when the tucker plate is mounted upon trunnions vibrating not substantially on a line with the defining edge of the tucker plate, as contrasted with the case where the tucker plate is mounted upon trunnions and vibrates on a line with the defining edge?

A. When the diamond form is being made, as shown in Figures 12, 14 and 16, of the patent, No. 598,497, the bag is apt to rip or tear through the center. And the most critical point is a trifle beyond that shown in Figure 12, of patent No. 598,497, or about the position of Figure 8, of patent, No. 337,966. The downward motion of the carrier aids, and prevents this tearing by the air acting as a resist-

ance against the outside of the paper, at the upper edge of the tube, and assists in turning over at that critical point. And the tucker plate in the meantime carries the paper at its defining edge forward and under, and permits the side-folds to be folded down, while the diamond is completed; whereas, in the Lorenz & Honiss patent, the tucker plate is carried on a carriage, and the air rather prevents instead of aiding in forming the diamond, as the carriage is moved forward.

X-Q. 352. Do you know of any machine prior to November 1, 1895, which comprised a rotary folding-bed, and an oscillating forming or tucker plate, the purpose of which machine was to produce the diamond folds, for square bottom paper bags. I include all the patents which were shown you in Q. 18.

A. The Lorenz & Honiss patent, No. 333,647, show two oppositely disposed plates, which are called the presser-plates 34, and the drawings show a revolving cylinder. The plates 34 oscillate on the surface of the cylinder. That's the only one I know of which conforms to the question,

Adjourned until Tuesday, January 6, 1903, at 11 A. M.

Tuesday, January 6, 1903, 11 o'clock A. M. Met pursuant to adjournment; counsel present as before.

X-Q. 353. Do you know of any machine prior to November 1, 1895, which comprised a rotary folding-bed, and a forming or tucker plate, vibrating or oscillating upon trunnions not on a line with its defining edge, the purpose of which machine was to produce a diamond fold, for square bottom paper bags? I include all the patents which were shown you in Q. 18.

A. No, I do not.

X-Q. 354. Will a machine delineated in Claussen Exhibits 1, 3 and 5, make a Deering bag?

A. The machine as exhibited in Claussen Exhibit No.

1 will make a Deering bag; but the machines made according to the Exhibits No. 3 and No. 5 will not make a Deering bag.

X-Q. 355. Does Claussen Exhibit No. 5 show the combination of a tucker plate, vibrating upon trunnions not substantially on a line with its defining edge, and devices to hold the upper ply of the tucked paper tube against the face of the tucker plate, between the line of its trunnion and the line of its defining edge?

A. There are no devices shown which hold the upper ply of the tube directly against the tucker plate; but the construction is such that as soon as the outer triangular fold of the upper ply is turned and held against the Vee plate, then that fold cannot get away from the tucker plate, and therefore is held indirectly against the tucker plate.

X-Q. 356. In answer to Q. 226, you referred to an opinion which Mr. Walker, defendants' counsel, expressed to you, that the machine of your patent, No. 598,497 (Application No. 600,861), would not infringe any of some two hundred and five patents, among which was the Liddell Patent, No. 558,969. Was this opinion of Mr. Walker's an oral opinion or a written opinion?

A. It was a written opinion.

Complainants' counsel calls upon Mr. Walker to produce this opinion.

Defendants' counsel asks complainants' counsel to state on the record, the ground upon which he calls upon Mr. Walker to produce the written opinion referred to by the witness.

Complainants' counsel replies that the Mr. Walker referred to is defendants' counsel, and that as defendants' counsel, he asked the witness in Q. 226, relative to an opinion, which opinion, it now appears, was a written opinion; and since defendants' counsel, Mr. Walker, has seen fit to refer to this written opinion on direct examina-

tion complainants' counsel calls for the production of the same.

In response to the request of complainants' counsel, Mr. Walker now produces a true copy of the written opinion referred to, which copy is headed "Statement and Opinion Relevant to Six Certain Paper Bag Machines of Edward E. Claussen, of Hartford, Connecticut," and is dated "Hartford, Connecticut, December 24, 1896," and has annexed thereto a list of United States Paper Bag Machine patents for the years 1880–1896 inclusive, and which patents are two hundred and five in number, and one of which two hundred and five patents is the Liddell patent No. 558,969, of April 28, 1896.

Complainants' counsel offers in evidence the foregoing opinion; and the same is marked "Complainants' Exhibit, Walker Opinion."

X-Q. 357. Please examine Complainants' Exhibit, Walker Opinion, and state whether the list of patents appended thereto is the list of patents referred to by you in answer to Q. 226?

A. Yes, it is the list.

X-Q. 358. Where is the machine now, if you know, to which you referred in answer to Q. 29, and known as the Spencer machine?

A. Last I saw it, it was in the factory at Rumford Falls, Maine, and I presume it is there now.

X-Q. 359. How large was this Spencer machine?

A. The size of bag that machine made was the regular two-pound bag. The base of the machine was about five by three feet, and the machine stood up about five feet from the floor.

X-Q. 360. When you constructed this machine for Spencer, and before the Spencer contract was forfeited, was this machine operated by hand, or by power?

A. It was operable by hand, and by power; and we operated it both ways.

X-Q. 361. Why was the Spencer contract forfeited?

Mr. Walker asks complainants' counsel to state whether he means to inquire what act or default of Mr. Spencer, or those whom he represented, caused the forfeiture in question; or whether he means to inquire what motive caused Mr. Spencer, or those whom he represented, to allow the forfeiture to occur.

Complainants' counsel replies that he desires to know all the reasons why this contract was forfeited, if there are more than one.

Mr. Walker objects to the question, because it is not confined to what was done or omitted to be done by Mr. Spencer, or those whom he represented; but is broad enough to include what motives influenced Mr. Spencer, or those whom he represented, to allow the contract to be forfeited, which motives can be known to the witness only by hearsay, if known at all.

A. After having a machine in running order, and having completed and fulfilled the contract, I notified Mr. Spencer to come to Hartford, and accept or reject the machine; and upon this request, they sent their expert, Casper Reissing, from Plantsville, Connecticut, to Hartford. The machine was then making seventy-five bags a minute by power. I then was called to New York to see Mr. Spencer and his associates; and they wanted to know what I could do and how much money it would require to get the machine running at one hundred per minute. As the appropriation which they had allowed had been expended, I requested them to advance $500, and I was to expend that money according to my best judgment. But this $500 was according to their idea, to come out of the purchase price of the patents, to which I would not submit, and furthermore, I noticed that I had to deal with several very keen business men, so I made up my mind at once that I would not answer any more questions; but left the office stating that they

1036

should write to me, and submit their proposition, in writing, and I would then answer that letter as to what I was willing to do. They finally made their proposition, which I promptly rejected, for the reason that it was not fair. This may have been the reason that they would not accept or reject the machine for quite a while, perhaps two or three months, and after writing to them on several occasions, they never answered my letters, and I then went to Mr. Walker, asking him to transfer the patents which were in his name as Trustee—to re-assign the same. Upon Mr. Walker's advice, the time limit of two or three weeks was given Mr. Spencer to decide; and during this time Mr. Spencer requested Mr. Walker to come to the factory and see the machine in operation. Mr. Walker came to the factory, and saw the machine running at seventy-five bags per minute and the same was driven by belt, and the production of one minute's run was carefully examined and inspected and four bags out of the seventy-five which the machine produced in that one minute were found to be defective or not merchantable. The correspondence Mr. Walker had after that with Mr. Spencer I do not know of; but the patents were re-assigned to me by Mr. Walker, as Trustee. But I hear from hearsay that there was some dissatisfaction among the associates which Mr. Spencer represented; and that may have been the cause and the reason why these patents were assigned back to me by Mr. Walker.

X-Q. 361½. What is Mr. Spencer's full name?

A. I think it is Robert T. Spencer.

X-Q. 362. Who were Mr. Spencer's associates in this matter?

Mr. Walker objects to further cross-examination upon this subject, as having no relevancy to the direct examination and no relevancy to any issue of this case. And Mr. Walker states to the Court that he believes the purpose of this cross-examination to consist in the desire of complain-

ants' counsel to lay, if possible, some foundation for questioning in some other litigation, the title of the Continental Paper Bag Company, to the Claussen patent No. No. 598,497, of February 8, 1898; which title, though known to Mr. Walker to be perfect, is not in question in this litigation.

A. I only remember one of them, Mr. L. V. Walkley. At the time he was living in Plantsville, Connecticut.

X-Q. 363. How many bags per minute will the Stilwell machines and the machines of the Lorenz & Honiss patents produce?

A. I know nothing of the amount of production of the Stilwell machines. The 2, 3, 4, and 5 pound bag machines of the Lorenz & Honiss patent, No. 361,951 produced, the last time I heard of it, forty thousand bags per day for each machine. But forty-two thousand was considered an exceptionally good run. This I know, because Mr. Reising gave me these figures at the time he was in Hartford inspecting the Spencer machine. If a machine runs forty thousand bags per day, the machine must run eighty-two bags per minute to produce this production, as there is always a considerable loss of time in placing rolls of paper on the machine, attending to the paste, etc.

X-Q. 364. If the Spencer machine, to which you have referred produced seventy-five bags per minute, how many would that be for a day's run?

A. About thirty-six thousand bags per day.

X-Q 365. After building the Spencer machine, which I understand was completed in June, 1897, when next did you build any model or any machine embodying the features illustrated in either Claussen Exhibits, Nos. 1, 3, or 5?

A. I set again at work designing a second model machine in January, 1899.

X-Q. 366. Was this after you made your contract with Mr. Elsas?

A. It was after I made a preliminary contract with Mr. Elsas.

X-Q. 367. The contract to which you refer in answers to Qs. 38, 39, and 240 was, I understand, made subsequent to this preliminary contract and was entered into in May of 1899?

A. Yes, that is right. The preliminary contract was made in January, 1899.

X-Q. 368. Please to state whether or not the tucker plate in the machine which you constructed under the Spencer contract, beginning February 1, 1897, had its trunnions coincident with one of its edges?

A. Yes, it did.

X-Q. 369. And was this edge the defining edge of the tucker plate?

A. No; it was not.

X-Q. 370. In answer to Q. 246, you mentioned a model machine which was built under your direction at the Garvan Machine Works. When was that machine commenced and when was its construction completed?

A. The machine was started at the Garvan Machine Works, in the spring of 1899, and finished and completed shortly before it was sent to Elkhart, Indiana, in October, 1899.

X-Q. 371. Do you know where that model machine is now?

A. Yes, it is in the factory at Rumford Falls, Maine.

X Q. 372. When you speak of the factory at Rumford Falls, Maine, you refer, do you not, to the factory of the defendant Continental Paper Bag Company?

A. I do.

X-Q. 373. In answer to Q. 242, you stated that the tucker plate of the Spencer machine differed in some respects from the tucker plate 75, as shown in your patent No. 598,497. Will you please explain what these differences were?

A. The difference consisted of a rearward extension of that tucker plate beyond the center of the shaft or trunnions 75a; and it was of the same design as shown in Figure 19 of the Claussen & Mortson patent No. 635,090.

X-Q. 374. Why did you put in the Spencer machine the tucker plate of the Claussen & Mortson patent?

A. Because I found that machine would operate better.

X-Q. 375. Did you try the tucker plate of the Claussen patent first on the Spencer machine?

A. Yes.

X-Q. 376. How and why did the tucker plate of the Claussen & Mortson patent, work better than the tucker plate 75, of the Claussen patent No. 598,497?

A. Because the tucker plate as shown in Figure 19, had on the rear end a hook which entered into the bag, and assisted in forming the diamond; and finally when the bag was ironed out by the ironing plate 120, as shown in Figure 1, of patent. No. 635,090, that ironing plate had a surface to press against when the bag was finally pressed down to its final proportions.

X-Q. 377. Referring again to the Spencer machine, did this machine have the diamond fingers 70 and 71, of Claussen & Mortson patent, No. 635,090?

A. No, it did not.

X-Q. 378. What instrumentalities did the Spencer machine have for performing the functions which the diamond fingers 70 and 71, of Claussen and Mortson patent, No. 635,090, perform?

A. I relied upon the paper turning over at the end of the slits in the lower side of the ply of the tube; and which slits would have to be made very carefully, and it required very fine adjustment of the slitter knives.

X-Q. 379. Are these slits shown in the drawings of any patent or patents?

A. Yes, they are shown in the Claussen machine of

patent No. 598,497, Figure 11, below the numeral 61; and in Figures 7, 9, 12, 15, of patent No. 635,090, near to the numerals 70 and 71.

X-Q. 380. Why was the finger 143, of the drawings of the Claussen and Mortson patent, No. 635,090, taken off the model machine which you built at the Garvan Machine Works?

A. Because we had a simpler mechanism and cheaper; and as the contract calls for sixty machines, this was quite an item to be considered.

X-Q. 381. On how many of the sixty machines was the finger 143, of the Claussen and Mortson patent, No. 635,090, applied?

A. As far as I know, about thirteen machines.

X-Q. 382. Were these thirteen machines, as you understand it, afterwards provided with other mechanism in place of the finger 143?

A. I do not know.

X-Q. 383. Is it not a fact that a paper bag machine, comprising a rotary folding bed and a forming or tucker plate, vibrating or oscillating upon trunnions not on a line with its defining edge, is a much better paper bag machine than any paper bag machine which you know of prior to November 1, 1895. I include all the patents which were shown you in Q. 18 prior to that date?

Mr. Walker objects to this question because it does not specify what particular paper bag machine "comprising a rotary folding bed and a forming or tucker plate vibrating or oscillating upon trunnions not on a line with its defining edge" is contemplated by the question; it being quite conceivable that one machine having those characteristics might be better than any paper bag machine known prior to November 1, 1895, while another machine having those characteristics might be worse than some paper bag machines known prior to November 1, 1895.

A. Yes, it is.

X-Q. 384. And the presence of this combination in a paper bag machine, greatly increases the speed of production of paper bags over machines prior to November 1, 1895, does it not?

A. Yes.

X-Q. 385. Did you personally superintend the construction of the first paper bag machine for the defendant Continental Paper Bag Company?

A. Yes.

X-Q. 386. How many of the machines manufactured for the company did you superintend the construction of?

A. There was the first machine made at the Garvan Machine Company; then twenty-seven two to five pound; and then the quarter to one and one-half, and the six to ten pound machines were started, but were not finished, under my supervision, as in the meantime I was sent to Rumford Falls to look after the machines that arrived every now and then. Two machines of the twelve and sixteen pounds were built under my supervision in Hartford, Connecticut, and also one twenty to thirty-five pound machine. The balance of all the orders for parts of machines were in the works at that time.

X-Q. 387. In the machine of your patent, No. 598,497, and in the machine of Claussen & Mortson patent, No. 635,090, the defining edge of the tucker plate comes into contact with the cylinder or forming bed, during the diamond forming operation, does it not?

A. Not in the machines in operation; but they are shown as coming into contact on the patent. In some of the machines as run at Rumford Falls this might be the case, due to the wearing of the cams or a change in the setting of the cams; but, originally, they were intended not to come in contact with the cylinder or carrier.

X-Q. 388. How far apart was it intended that these parts should be in the Continental machines?

A. The average is about a quarter of an inch.

X-Q. 389. Was this feature present in the first machine which you supervised the construction of for the Continental Company?

A. Yes, I think it was.

X-Q. 390. Was it present in the machine made at the Garvan Machine Works?

A. I think it was.

X-Q. 391. Was it present in the Spencer machine?

A. I don't recollect if the tucker plate did touch the carrier or not.

X-Q. 392. Referring to the drawings of Claussen patent, No. 598,497, can the tucker plate 75 return to its tube-receiving condition, after the diamond fold is in operation, without colliding with the cylinder 55?

A. No, it cannot.

X-Q. 393. And in order to enable the defining plate or tucker plate 75, to return to its tube-receiving condition, in order to be in a position to perform its designed function or operation, is would be necessary to cut out the cylinder ahead of the front gripper 61?

A. Yes.

X-Q. 394. How early was the ironing roller which appears in the machine in Mr. Walker's model-room, and which machine is an illustration of the defendants' machines, substituted upon such machines, for the ironing plate 120, of the Claussen & Mortson patent which you have said was put on all the machines which were constructed under your direction?

A. The first I heard of it, was in about September, 1902, when I got back from Europe.

X-Q. 395. In answer to Q. 277 you stated that the machine in Mr. Walker's model-room differed from the machines which were constructed under your supervision for the defendants in a "change in the tucker plate." Will you please explain what that change was, and when first it was made?

Mr. Walker objects to this question because it already appears that this witness did not participate in making that change; and Mr. Walker states that hereafter by other witnesses he expects to prove the exact character of the tucker plate which was used before the change was made, and the exact character of the tucker plate which has been used since the change was made, by reference to correct drawings of the two tucker plates, and their operating mechanisms respectively.

And Mr. Walker states that the subject is much too complicated to be explained in words without the aid of drawings.

Complainants' counsel replies that since Mr. Walker has, on direct examination, brought out the fact from this witness that a change in the tucker plate was made, it is perfectly proper to ascertain (a) when this change was made, and (b) what this change was.

A. The tucker plate, as used on the machines under my supervision, was a flat plate of the contour as shown in Figure 19 of Patent No. 635,090, and was securely held upon a shaft as represented at 84 and 83 of the same figure, the center portion of which was milled away to about one-half of the thickness of the shaft. In the machine in Mr. Walker's model-room, the shape of the plate is considerably different, there being portions cut away on either side and steel pieces substituted, so as to permit the nippers 103 and 104, of patent No. 635,090, to act upon a spring-pressed surface. These springs and the plate are mounted upon a frame, and that frame is supported by short shafts on each side, which serve as trunnions. I first heard of the change being made in the early part of the spring of 1902, previous to my trip to Europe.

X-Q. 396. Was this change made subsequent to January 1, 1902?

A. I think it was.

Cross examination closed.

Re-direct examination :

R-D-Q. 397. You say in reply to X-Q. 384 that the presence in a paper bag machine of the combination of a rotary folding bed, and a forming or tucker plate, oscillating upon trunnions, not on a line with its defining edge, increases the speed of production of such a machine over the paper bag machines which were known prior to November 1, 1895. Please to state whether in answering that question, you had in view any particular paper bag machine having that combination of rotary folding-bed and oscillating tucker plate, and if so, what particular paper bag machine you had in view ?

A. I had the one in view built, under the Claussen patent, No. 598,497 ; as I do not know of any other machine that is running under that combination.

R-D-Q. 398. Will the presence of that combination in a paper bag machine necessarily give to that machine a higher speed than that of any machine prior to November 1, 1895, on the one hand ; or on the other hand, must the machine having that combination be in all respects well organized and constructed, in order to have greater speed than the paper bag machines which were used prior to November 1, 1895 ?

A. A paper bag machine built under the combination of a revolving bed and a tucker plate would not produce a machine of greater speed, unless the parts that are organized and co-operated with the bed and the tucker plate, harmonize.

R-D-Q. 399. Please to look at the Liddell patent, No. 558,969, and state whether it shows a paper bag machine comprising a rotary folding-bed and a forming plate oscillating upon trunnions not on a line with its defining edge ?

Objected to as improper in re-direct examination.

A. Yes, it does.

R-D-Q. 400. Now, please to state whether that particular

paper bag machine of the Liddell patent, No. 558,969, would be a paper bag machine having greatly increased speed of production, over the square bottom paper bag machines which were known and used prior to November 1, 1895?

Same objection.

A. It, no doubt, would be a good machine, provided that the co-operating parts that go with the cylinder and the tucker plate were properly designed; but I do not know that it would be a machine producing more product than the machines used previous to November 1, 1895.

R-D-Q. 401. Have you ever studied the Liddell patent, No. 558,969, for the purpose of satisfying yourself how the co-operating parts that go with the cylinder and the tucker plate, would have to be designed in order to make the Liddell machine a good machine?

Objected to as improper on re-direct examination, since not a single inquiry was made during the cross examination as to the operativeness of the machine illustrated in the Liddell drawings.

A. Yes, I have

R-D-Q. 402. Please to state what plan you made, if any, for the purpose of making the Liddell machine a good machine?

Same objection, and also because the question assumes that the witness has testified that the machine illustrated in the drawings of the Liddell patent, is not a good machine, as it is there shown; and the witness has not so testified.

A. The change would be in the fingers G and H.

R-D-Q. 403. What change would have to be made in the fingers G and H of the Liddell patent, in order to make those fingers work properly?

Same objection, and also on the ground that the witness has not testified that those fingers will not work properly as they are.

A. They would have to be designed in such a manner

that the fingers G, would come down over the side of the tube, and press the lower ply down upon the cylinder; and the fingers H, would have to be designed so that they would come down from the lower side and entering between the tucks and firmly clasp the upper ply of the tube, and the upper ply of the tucks, to the tucker or forming plate.

R-D-Q. 404. Did you ever follow out the train of cams, arms, and gears, which are shown in Figure 1, of the Liddell patent as actuating the forming plate, for the purpose of seeing whether that train of cams, arms and gears, is adapted to so move the forming plate as that the forming plate can co-operate with the cylinder in opening out one end of a tucked paper tube into a diamond form.

Objected to as leading, and also as improper on redirect examination.

A. No, I have not.

R-D Q. 405. Am I right in understanding from your testimony, that in each of the machines of the Continental Paper Bag Company, the tucker-plate has always oscillated upon trunnions which were not in a line with its defining edge and which also were mounted in a stationary bearing?

Objected to as leading.

A. Yes.

R-D-Q. 406. Is it possible to use such a tucker plate as that, with the rotating cylinder C of the Liddell Patent, No. 558,969, in the place of the forming plate shown and described in that patent, as oscillating on trunnions, which are mounted in the ends of the oscillating arms S?

Objected to as leading, immaterial and improper on redirect examination.

A. No.

R-D-Q. 407. What do you say of the necessity or non-necessity of employing a carrier or folding bed moving

radially toward and away from the axis of a rotary conveyer, if you are going to employ, in a square bottom paper bag machine, a tucker plate vibrating on trunnions, which are remote from its defining edge, and which trunnions turn in stationary bearings?

Objected to as leading, immaterial and improper on redirect examination, and also as indefinite and speculative, since the machine which counsel has in mind is not identified to the witness by any drawing or model.

A. It is absolutely necessary.

R-D-Q. 408. Was the machine of Claussen Exhibit No. 5 designed to make the same kind of paper bag as the machine of Claussen Exhibit No. 3?

A. Yes, it was.

R-D-Q. 409. Please to state in words, as well as you can, precisely how that kind of paper bag differs from the Deering bag?

A. The difference between the Deering bag and the bag which is made on the machine represented in Claussen Exhibits Nos. 3 and 5 is, that the second flap is turned down and the side flaps folded over the same, and then completing the bag by folding over the first flap; whereas, in the Deering bag, the two side flaps are first folded down and then the second flap is folded on to the side flaps, and then completing the bag by folding over the first flap.

R-D-Q. 410. Do the machines of the Continental Paper Bag Company, at Rumford Falls, make bags folded like Claussen Exhibit, No. 4, or do those machines make the Deering bag?

A. They make the Deering bag.

R-D-Q. 411. Please to look at the paper bag I now show you, and state what bag that is.

Objected to as improper redirect examination.

A. It no doubt is a bag made on one of the machines of the Continental Paper Bag Company at Rumford Falls, and it is a Deering bag.

Mr. Walker offers in evidence the bag last identified by the witness, and requests that it be marked Claussen Exhibit No. 7, and it is accordingly so marked.

Objected to as immaterial.

R-D-Q. 412. What difference, if any, would have to be made in the rotating conveyer and the oscillating carrier of one of the Continental Paper Bag machines, in order to adapt that machine to make paper bags like Claussen Exhibit, No. 4.

Objected to as immaterial and improper re-direct examination.

A. No change.

R-D Q. 413. What device is shown in Claussen Exhibit No. 3, and in Claussen Exhibit No. 5, which adapts the machines of those exhibits to making paper bags like Claussen Exhibit No. 4?

Same objections.

A. Principally the Vee plate, the tucker plate, the carrier, pivoted to the conveyer, the front clip 19, and side clips 20.

R-D-Q. 414. Which of these devices, if any, require to be omitted in order to produce the Deering bag?

Same objections.

A. The Vee plate, which is indicated in Claussen Exhibit No. 3, by the numeral 10.

R-D-Q. 415. What change, if any, must be made in the tucker plate P, of Claussen Exhibit, No. 3, in order to use the machine of that exhibit, for making Deering bags, after the Vee plate 10, is taken away?

Same objections.

A. The clips 16, which hold the upper ply of the tube to the Vee plate 10, would have to be applied to the tucker plate P, so as to make the Deering bag.

R-D-Q. 416. When you made the invention on November 6, 1895, which is shown in Claussen Exhibit, No. 5,

what did you consider to be the most important distinguishing characteristic of that invention?

Same objection.

A. The conveyer having a carrier pivoted thereto, and operated by a cam, whereby that carrier is oscillated toward the center of the conveyer and back again into its normal position.

R-D-Q. 417. What do you consider to be the most important distinguishing characteristic of each of the square bottom paper bag machines of the Continental Paper Bag Company; one of which machines was shown you in my model-room during the earlier part of this deposition?

Same objection.

A. The oscillating carrier.

R-D-Q. 418. What oscillating carrier do you refer to in your last answer?

Same objection.

A. The oscillating carrier having its forward end pivoted to the conveyer, adapted to swing toward and away from the center of the conveyer.

R-D-Q. 419. What essential difference, if any, exists between the rotating conveyer and the oscillating carrier pivoted thereto, of Claussen Exhibit. No. 5, on the one hand; and the rotating conveyer, and the oscillating carrier of each of the square bottom paper bag machines of the Continental Paper Bag Company, on the other hand?

Same objections.

A. There is no difference.

R-D-Q. 420. What difference, if any, exists between the tucker-plate turning on trunnions in stationary bearings, not on a line with its defining edge, which is shown in Claussen Exhibit No. 5, on the one hand; and the tucker-plate which is shown in the Claussen Patent, No. 598,497, on the other hand?

Objected to as immaterial and improper re-direct examination, and also as leading, because Mr. Walker asks the

witness to testify as to what is shown in Claussen Exhibit No. 5.

A. There is no difference.

R-D-Q. 421. Now it appears in your testimony that on November 6, 1895, you invented the rotating conveyer and oscillating carrier, used in the square bottom paper bag machines of the Continental Paper Bag Company, and shown in the Claussen patent, No. 598,497, and that on the same day, you also invented the oscillating tucker-plate shown in that patent. Now please to state whether you have ever found any trace of the existence of either of those inventions, in the art as it existed prior to when you made those inventions yourself?

Objected to as improper re-direct examination.

A. I have looked over a great number of patents, not only pertaining to paper bag machines, but also to envelope machines, and a great number of patents of metal working machines, and never have yet found the combination of a rotating conveyer, having an oscillating carrier pivoted thereto, and a vibrating tucker-plate.

Adjourned until Wednesday, January 7, 1903, at 11 o'clock, A. M.

Wednesday, January 7, 1903, 11 o'clock A. M. Met pursuant to adjournment; counsel present as before.

Re-cross examination:

R-X-Q. 422. Is it not a fact that it would require mere mechanical skill to design the fingers G, shown in the drawings of the Liddell patent, so that they could come down over the sides of the tube, and press the lower ply of the paper bag down upon the cylinder, and to so design the fingers H that they should come down upon the lower sides and enter between the tucks and firmly clasp the upper ply of the tube and the upper ply of the tucks, to the tucker or forming plate?

A. I believe that it would not require any invention to substitute the proper grippers for the fingers G, as indicated in patent, No. 558,969 to make a change that would operate; but it would take a little bit more than mechanical skill to apply those fingers marked H, to the tucker plate, to make it operable.

R-X-Q. 423. What do you think would have to be done in order to properly design the fingers H, of the Liddell patent to firmly clasp the upper ply of the tube, and the upper ply of the tucks, against the tucker or forming plate?

A. To properly design fingers H, of the Liddell patent, No. 558,969, I would suggest and say that those fingers would have to be designed somewhat similar to the fingers 82 and 83, as shown in Figures 7, and 8, of the Lorenz & Honiss patent, No. 337,966, and proper means designed to operate the same, such as suitable cams to make it applicable to the Liddell patent; and if so designed, then the Liddell patent would operate.

R-X-Q. 424. Is it not a fact that you agreed with Mr. Walker that the machine of the Claussen patent, No. 598,497, did not infringe the Liddell patent, because it was not possible to use a tucker plate vibrating upon oscillating arms, such as is shown in the Liddell patent, in place of a tucker plate oscillating upon fixed trunnions such as is shown in the Claussen patent, in combination with a rotating folding-bed?

A. I don't know if that was an agreement. I know it was my opinion on it; but I do not know if Mr. Walker coincides with that opinion.

R-X-Q. 425. Are there not a number of instances in patents, prior in date to the Liddell patent, which show fingers whose functions are similar to the functions of the fingers G of the Liddell patent, and which do come down over the sides of the tube, and press the lower ply of the paper bag down upon the cylinder?

A. Yes, there are. Similar fingers are shown in the following places: Patent No. 337,965, to Lorenz & Honiss, and are indicated by 67 and 68; patent No. 337,966, to Lorenz & Honiss, Figures 5 to 9 inclusive, and indicated by 61 and 62; patent 598,497, to Claussen, shown in Figures 5 to 16, and indicated by 67; and patent No. 635,090, to Claussen & Mortson, Figures 4 and 17, and indicated by the numerals 50 and 51.

R-X-Q. 426. Are there not a number of instances in patents prior to the date of the Liddell patent, which show fingers whose functions are similar to the functions of the fingers H of the Liddell patent, and which come down upon the lower side and enter between the tucks of the paper tube, and firmly clasp the upper ply of the tube and the upper ply of the tucks to the tucker or forming plate?

A. Yes, and they are shown in the Lorenz & Honiss patent, No. 337,966, in Figures 5 to 9, and indicated by the numerals 82 and 83.

R-X-Q. 427. Please look at Claussen Exhibit No. 3, and state whether the cylinder 6, is of solid material?

A. No designer of any machine would make a cylinder like that solid.

R-X-Q. 428. Is the face of the cylinder 6, continuous, except where it is cut away for the oscillating carrier 6a?

A. Yes, it is.

R-X-Q. 429. In the drawing, Claussen Exhibit No. 3, does the tucker plate P, ever come in contact with the oscillating carrier 6a?

A. No, it does not.

R-X-Q. 430. Then it is true that in the machine illustrated in Claussen Exhibit No. 3, the transverse fold made by the tucker plate P, is not made upon, and in co-operation with, the oscillating carrier, 6a. Is that correct?

A. Yes, it is.

R-X-Q. 431. And the defining edge of the tucker plate

P, in Claussen Exhibit No. 3, comes in contact with the continuous face of the cylinder, 6, when forming a transverse fold. Is that also correct?

A. In Figure 6, of the Claussen Exhibit No. 3, the defining edge of the tucker plate P, comes in contact with the surface of the cylinder 6.

R-X-Q. 432. Are there any other figures in Claussen Exhibit, No. 3, which show the defining edge of the tucker plate P, as coming into contact with anything else except the continuous face of the cylinder 6?

A. In Figure 2, of the Claussen Exhibit No. 3, the defining edge of the tucker plate P is marked and indicated by a dash-and-dot line, and that dash-and-dot line intersects with the circumference of the cylinder 6.

R-X-Q. 433. Am I right in understanding you to say, that you made no drawings of a machine in which there was an oscillating or vibrating tucker plate, and a rotary folding-bed, with an oscillating carrier, pivoted thereto, between the time that you completed Claussen Exhibit, No. 3, and the time which you began to make the patent office drawings for your patent, No. 598,497?

A. Yes, you are correct.

Re-cross Examination closed.

Re-re-direct examination.

R-R-D Q. 434. I call your attention to Figure 6, of Claussen Exhibit, No. 3, and particularly to the position of the tucker plate P, relatively to the surface of the conveyer 6, just in the rear of that recess in that conveyer, which is occupied by the carrier 6a; and I call your attention to the obvious fact that as the conveyer continues to revolve in a clock-wise direction, and the tucker plate P continues to oscillate in an anti-clock-wise direction, the defining edge of that tucker plate will soon reach contact with the periphery of the cylinder, just at the rear of the recess in that periphery, and that if the parts continue to move after that contact is reached, one part or the other

would have to break; and having called your attention to those obvious facts, which appear upon the face of Figure 6, I ask you to explain the matter.

Objected to as leading and immaterial.

A. The recess indicated in the cylinder or conveyer, 6, should have extended a little farther beyond the point of contact between the defining line of the presser-plate, and the conveyer 6, as it was intended.

R-R-D-Q. 435. I do not understand your last answer. Please therefore, to try again to make me understand what you mean?

Same objections.

A. The recess, as shown in Figure 6 of the conveyer 6, should have been made larger so as to permit the defining edge of the tucker plate P to pass without colliding with the conveyer 6.

R-R-D-Q. 436. Please try again to state what you mean in words that cannot possibly be mistaken by anybody?

Objected to as already answered.

A. Referring to the recess of the conveyer 6 in Figure 6, that recess should have been made longer measured on the circumference of the cylinder 6, leaving the end of that recess near the front clip 19, the same as it is shown, but extending and cutting away at the other end thereof, so that the defining edge of the tucker plate P can pass unobstructed.

R-R-D-Q. 437. I perceive that you are not so skillful in describing things as you are in inventing things, and I also understand now precisely what you mean; but I fear the Court will not understand what you mean from your last answer, and, therefore, I will venture to put a leading question to you, and let Mr. Betts object to that question if he must.

Am I right in understanding that the recess which is occupied by the carrier 6a in the cylinder 6 should extend

backward further than it does in Figure 6, so as to permit the defining edge of the tucker plate P to pass into that recess, as the cylinder revolves forward in a clockwise direction, and as the tucker plate oscillates forward in an an anti-clockwise direction, from the position shewn in Figure 6?

Objected to as leading. The attention of the Court is called to the fact that in three successive questions Mr. Walker asked the witness to explain matters concerning this figure; but the answers were apparently not satisfactory to Mr. Walker, and therefore this leading question is put to the witness.

A. Yes, you are right.

R-R-D-Q. 438. I call your attention to Figure 2, of Claussen Exhibit, No. 3, and to the fact that the semi-circular broken line which indicates the path of the defining edge of the tucker plate P, intersects with the red circle which may indicate the periphery of the cylinder 6; and I ask you to explain how that tucker plate and that cylinder are to work together without one or the other of them being broken, when the defining edge of the tucker plate reaches that part of its path which appears in Figure 2, to intersect with the periphery of the cylinder?

A. It will be noticed, and by referring to Figure 2, that several circles are drawn in red ink, and these circles indicate gears by which the rotary motion is communicated to the shaft upon which the cylinder 6 is mounted, and that therefore, the red circle, which has its center of the cylinder 6, in Figure 2, indicates the gear, and that therefore, the circumference of the cylinder would have to be cut away to permit the defining edge of the tucker plate P, to pass unobstructed.

R-R-D-Q. 439. I observe that the circumference of the cylinder 6, is indicated by black lines, in Figures 5, and 6, and that those black lines appear to have the same radius as the complete red circle in Figure 2; and having called

your attention to those facts, I ask you whether that complete red circle does not indicate the diameter and periphery of the cylinder, in addition to indicating the pitch-line of the gears?

A. Yes, it does.

R-R-D-Q. 440. Now, if you were to build a machine exactly like Figure 2, of Claussen Exhibit No. 3, and start that machine at work, it would follow, would it not, that the defining edge of the tucker plate P, would never be able to move backward after working on one bag blank so as to begin work on another bag blank; because there is no recess shown in the periphery of the cylinder 6, to permit the backward oscillation of the tucker plate P?

Objected to as leading.

A. Yes, that is right.

R-R-D-Q. 441. Did you make Claussen Exhibit No. 3, in the latter part of 1895 and the first part of 1896, as a working drawing, to be followed exactly in building a machine, on the one hand; or on the other hand, did you make that exhibit to represent your new invention of a rotary conveyer and an oscillating carrier pivoted thereto, in combination with an oscillating tucker plate turning upon fixed trunnions, remote from its defining edge, so that the general character of that invention, as far as it had been developed at that time, might be recorded on paper, without particular reference to exact mechanical details?

Objected to as leading.

A. The Claussen Exhibit No. 3 was made by myself in the latter part of 1895 and the early part of 1896, not as a working drawing; but was made to record my invention made of a rotating conveyer having an oscillating carrier pivoted thereto, and an oscillating tucker plate pivoted in stationary trunnions, and having a defining edge, and that the general character of that invention, as far as it had been developed, might be preserved.

R-R-D-Q. 442. According to that invention, was the tucker plate to be pivoted on trunnions remote from its defining edge, as shown in Claussen Exhibit No. 3?

Objected to as leading.

A. Yes.

R-R-D-Q. 443. Now, please to state what you did about the invention shown in Claussen Exhibit No. 3, and also in Claussen Exhibit No. 5, after you conceived that invention, when you made Claussen Exhibit No. 5, November 6, 1895, and before you filed your application, No. 600,861, on July 29, 1896. I do not mean to inquire for an exact account of everything you did about that invention between November 6, 1895, and July 29, 1896, but only what successive steps you took in regard to that invention during that time?

Objected to as already answered.

A. Having finished my sketch of November 6, 1895, as shown in Claussen Exhibit No. 5, I then made the invention of November 22, 1895, of Claussen Exhibit No. 1; and so that I could preserve these inventions I proceeded, on November 23, 1895, to make Claussen Exhibit No. 3, which I finished on January 17, 1896. While at work upon this drawing, and carefully considering the advisability which form of bag I should take up, either the Deering bag as shown in Claussen Exhibit No. 7, or the style of bag shown in Claussen Exhibit No. 4, I finally decided to adhere to the style of the bag as shown in Claussen Exhibit No. 7, for the reason that that was the bag which had been tested and found to be a bag well adapted to the commercial trade. In February I then started to make Patent Office drawings of my application filed July 29, 1895, Serial Number 600,861, which case was allowed and now bears the number 598,497.

R-R-D-Q. 444. Who made the eight sheets of drawings

which form parts of your application No. 600,861 and which now belong to your patent No. 598,487?

Objected to as already answered.

A. I did.

R-R-D-Q 445. Who wrote the specification and claims of that application, as it was originally filed July 29, 1896?

Objected to as already answered.

A. I did.

R-R-D-Q. 446. How many claims were in that original application, if you remember?

Objected to as calling for secondary evidence, and as improper re-re-direct examination.

A. There were about twenty-one claims.

R-R-D-Q. 447. When, if ever, after November 6, 1895, and before July 29, 1896, did you neglect or abandon your invention which was the subject of your application No. 600,861 of July 29, 1896?

Objected to as calling for a conclusion of law.

A. I do not understand the question.

R-R-D-Q. 448. Please to recall to mind the time between November 6, 1895, and July 29, 1896, and state what work you were mainly engaged in during that time?

A. At day-time I was working on justifying machinery and the like; but worked in the evening, and such time as I had to spare, on paper bag machinery.

R-R-D-Q. 449. What do you mean by justifying machinery?

A. A justifying machine is an attachment of a type-setting machine, which has for its object to discard small types called spaces, which are inserted between each word and substitute loose spaces which, after having been inserted, will fill out the line in the galley.

R-R-D-Q. 450. For what party were you engaged between November 6, 1895, and July 29, 1896, on type-justifying machinery?

A. For Mr. B. M. Des Jardins.

R-R-D-Q. 451. Were you engaged in inventing the machine of your application No. 600,861, during that time, on your own account, or were you doing that work under contract for some other party at that time?

A. At the time I was under contract with no one, or any company; but was working on my own account.

R-R-D-Q. 452. Your last two answers are inconsistent with each other, because your answer to R-R-D-Q. 450 states that you were working for Mr. B. M. Des Jardins, during the time inquired of; whereas your answer to R-R-D-Q. 451 states that at thai time you were under contract with no one, or any company, but was working on your own account. Now please to read carefully R-R-D-Q. 451 and answer that exact question?

A. In my answer to R-R-D-Q. 451, stating at the time I was under contract with no one or any company, but was working on my own account; I referred to paper bag machinery.

R-R-D-Q. 453. Now, why did you not give up the type-justifying job altogether, so as to devote the whole of your time to your paper bag machine invention after November 6, 1895, and rush your application on that invention into the Patent Office immediately, instead of devoting only evenings and other spare time to that work, so that you did not get the application ready to file until July, 1896?

A. Because I had to work for a daily income to support myself and family, and for that reason could not devote my full time to the preparing of my application, No. 600,861.

R-R-X-Q. 454. I observe that the application of your patent No. 598,497, was filed July 29, 1896. About how many days, prior to that time, had you completed the Patent Office drawings for this application?

A. I do not remember exactly; but it was perhaps three or four weeks.

R-R-X-Q. 455. Were you employed by Mr. Des Jardins

continuously from November 6, 1896, to and including July 29, 1896?

A. No, I was not.

R-R-X-Q. 456. For what period of this time were you in his employ?

A. I should say about three-quarters of that time.

R-R-X-Q. 457. How do you reconcile your last answer, with your answers to Qs. 5 and 6, which read as follows:

"Directly after my contract expired, October 1, 1895, with the Consolidated S. O. S. Company, I went to the Ballerstein Building, in Hartford, Connecticut, and continued working on bag machinery and took in other work that I was able to get a hold of."

Q. 6. "Did you establish a mechanical engineering office of your own, at the Ballerstein Building, October, 1895, and thereafter continue for a while, at work on your own account?"

A. "Yes."

A. I was able to get a hold of Des Jardins' work, and some very small other jobs to fill out the time; and whatever time I then had to spare, I devoted to bag machinery; but my evening work was always bag machinery.

R-R-X-Q. 458. About how many days, prior to July 29, 1896, on which date the application for your patent, No. 598,497, was filed, did you complete the writing of the specification which you have testified was done by yourself?

A. Perhaps two or three days.

R-R X-Q. 459. Did you start to write the specification of this application, before you completed the drawings?

A. I completed the drawings first, and then wrote the specification and then added the numbers to the drawings, which I used in the specification as I went along.

R-R-X-Q. 460. Is the set of drawings contained on eight sheets, the only set of drawings which you made for this application?

A. Yes.

Adjourned until Thursday, January 8, 1903, at 11 o'clock in the forenoon.

Thursday, January 8, 1903, met pursuant to adjournment; counsel present as before.

R R-X-Q. 461. In the construction of the machine shown in your drawing Claussen Exhibit No. 3, is it not true that the function of the oscillating carrier 6a, is to carry the lower ply of the blank downward and forward, so as to effect the distention of the blank, the upper ply being held stationary, while the oscillating carrier is thus active?

A. It is true that the lower ply of the tube is carried downward and forward by the carrier 6a, while the conveyer rotates; and also that portion of the tube of the upper ply between the front end to the edge of the bag blank is held stationary; but that portion of the upper ply of the tube, which is between the rear edge of the bag, and the defining edge of the tucker plate, is not held stationary.

R-R X-Q. 462. Then, it is true, that in the construction of the machine shown in your drawing, Claussen Exhibit No. 3, that the function of the oscillating carrier 6a, is to carry the lower ply of the blank downward and forward, so as to effect the distention of the blank, while the portion of the tube of the upper ply between the front end to the rear edge of the blank, is held stationary?

A. Yes.

R-R-X-Q. 463. Is it not also true that the usual mode of distending a bag blank to form a diamond fold, both before and after your conception of the modification shown in your drawing, Claussen Exhibit No. 3, was, and is, to carry the upper ply upward and backwards, while the lower ply is carried forward?

A. Yes.

R-R-X-Q. 464. Now, in the machine in Mr. Walker's model-room, which has been identified as one of defendant's machines, is it not true that the mode of distending the paper bag blank tube to form the diamond fold, is to carry the upper ply of the tube blank upward and forward, while the lower ply is carried forward?

A. In the machine in the model room, it is true that that portion of the blank between the edge of the tube and the rear edge of the completed bag blank is carried upward and backward, while the lower ply of the tube is carried forward; but that portion of the upper ply of the tube, which is between the rear edge of the bag, and the defining edge of the tucker plate, is carried forward and upward.

R-R-X-Q. 465. You examined this machine, did you not, before answering the last question, and saw it operate?

A. I did.

R-R-X-Q. 466. Such inward and downward motion as the oscillating carrier of the machine in Mr. Walker's model-room has, is merely for the purpose of clearing the tucker plate, is it not?

A. Yes, it is to clear the tucker plate, and to unfold the blank, and refold the same after the tucker plate has cleared the carrier.

R-R-X-Q. 467. What has the inward and downward motion of oscillating carrier of defendants' machine to do with refolding the blank?

A. By referring to patent No. 598,497, and particularly to Figures 8 and 10 and 12, the carrier is vibrating toward the center of the cylinder, whereby the tube is unfolded. If that carrier were to remain in that position, the tube would not be refolded into the diamond form, and therefore the carrier oscillates to its original position, whereby that blank is folded into the diamond form, and represented in Figures 14 and 16 of that patent.

R-R-X-Q. 468. By "oscillates to its original position" do you mean that it moves upward and outward?

A. Yes, I do.

Re-re-re-direct examination:

R-R-R-D-Q. 469. What difference, if any, exists between the operation of the carrier, 6a, pivoted to the conveyer 6, and provided with the front gripper and the two side grippers of Claussen Exhibit, No. 3, on the one hand; and the operation of the carrier pivoted to the conveyer, and provided with the front gripper and the two side grippers of the defendants' machine in the model-room; in respect of carrying the lower ply of the tucked paper tube and the lower plys of the tucks in that tube downward and forward?

Objected to as already answered.

A. The lower ply of the tube and the lower ply of the tucks, when clasped to the conveyer 6a, in Claussen Exhibit, No. 3, and particularly in Figures 5 and 6, those plys are carried downward and forward; or in other words, toward the center of the cylinder and forward; while in the machine in the model-room, the carrier swings toward the center of the cylinder, forward, and away from the center of the cylinder.

R-R-R-D-Q. 470. In the machine in the model-room, precisely how does the oscillating carrier move, while it is co-operating with the other parts of the machine to make a diamond form?

Objected to as already answered.

A. The front end of the carrier is pivoted to the cylinder, and moves in a circle, and any point in the outer part of the carrier, as, for instance, the creaser groove, 109, of Figure 14, in patent, No. 598,497, moves toward the center of the cylinder, upward and away from the center of the cylinder, during the time the pivot of that carrier is carried around in a circle.

R-R-R-D-Q. 471. R-R-X-Q. 464, reads as follows:

"Now, is the machine in Mr. Walker's model-room, which has been identified as one of the defendants' machines, is it not true that the mode of distending a paper bag blank tube to form the diamond fold is to carry the upper ply of the tube blank upward and backward; while the lower ply is carried for ward?"

In answer to that question, you said, among other things, that the lower ply is carried forward, but you did not say anything in that answer about that lower ply being carried in any other direction than forward. I ascribe this omission to the fact that the question was carefully confined to the forward movement of the lower ply of the bag blank, although counsel who put the question knows perfectly well that the lower ply of the bag blank has another motion in addition to its forward motion, because he has seen that machine in operation several times. Now, please to state in a few words, whether the forward motion of the carrier is the only motion it has, or whether the carrier in the machine in the model-room, also has some other motion, and, if so, what motion?

Complainants' counsel objects to the question as containing a statement by Mr. Walker, in reference to complainants' counsel, which has no place upon this record; and counsel further objects to this question as leading. Complainants' counsel objects to Mr. Walker testifying concerning the machine in the model-room.

A. It has beside the forward motion, a motion toward the center of the cylinder, and away from the cylinder.

R-R-R-D-Q. 472. Now state what difference, if any, exists between what is done to the lower ply of a paper bag blank, and the lower plys of the tucks in the paper bag blank, by the oscillating carrier in the machine in the model-room, on the one hand; and what is done to the lower ply of the paper bag blank, and the lower plys of the tucks in the paper bag blank, by the oscillating carrier 6a, of Claussen Exhibit No. 3?

Complainants' counsel objects to this question as already having been put, and already answered, and refers the Court to R-R-R-D-Q 469, and the answer thereto.

A. The lower plys of the blank, and the lower plys of the tucks when held to the carrier on the machine in the model-room, are carried inward toward the center of the cylinder forward, and again away from the center of the cylinder; whereas, the carrier 6a, and the lower ply of the tube and the lower plys of the tucks in Claussen Exhibit, No. 3, are carried toward the center of the cylinder, and forward.

R-R-R-D-Q. 473. What becomes of the lower ply of the tucked paper tube, and the lower plys of the tucks after they have been carried toward the center of the cylinder, and forward?

A. The blank is then folded.

R-R-R-D-Q. 474. After the carrier 6a, of Claussen Exhibit No. 3, has moved toward the center of the cylinder, does it stay there a year, or does it come back again after awhile?

Objected to as leading.

A. Yes, it also moves away from the cylinder.

R-R-R-D-Q. 475. How long did you and I wait after eleven o'clock this morning before complainants' counsel began to put any questions to you?

Objected to as immaterial.

A. About forty minutes.

R-R-R-D-Q. 476. Where was complainants' counsel during that forty minutes?

Objected to as immaterial and incompetent.

A. In the general waiting room of this office.

R-R-R-D-Q. 477. Who else was in that room for that forty minutes?

Same objections.

A. Mr. Chambers.

R-R-R-D-Q. 478. Now, Mr. Claussen, it is apparent to

me that complainants' counsel after that forty minutes of consultation with Mr. Chambers, put R-R-X-Q. 461 to 468, inclusive, to you, in so skillful a manner that you were mislead thereby, in giving answers which are in several respects ambiguous on points which I desire to make perfectly plain to the Court. Therefore, I will ask you to banish from your mind, all the testimony you have given this morning, and try to tell the story over again and make it perfectly plain and perfectly complete.

And to begin with, please to state all the motions which the carrier 6a, of Claussen Exhibit, No. 3, has while it is co-operating with the other parts of the machine shown in Claussen Exhibit No. 3, to open out the forward end of a tucked paper tube, into a paper bag blank?

Mr. Chambers, in view of the rather remarkable manner in which Mr. Walker has referred to his presence, desires to note that he has been present at the examination yesterday and to-day, and expects from time to time, to be present in the future, in the capacity of associate counsel for complainant.

Mr. Betts objects to the question and to the whole first paragraph thereof, as having no proper place in this record, since it contains a statement by Mr. Walker who is not upon the witness stand, and subject to cross-examination, and which has no place in this record; and further objects to the question as grossly leading, and calls attention to the fact, that throughout the direct examination of this witness, Mr. Walker has continually framed his questions so as to indicate to the witness the character of the answer which Mr. Walker desired him to give; and moreover, complainants' counsel protests once and for all against the form of Mr. Walker's questions which burden the record, and are argumentative in form.

A. The carrier 6a has the following motions: A motion toward the center of the cylinder; forward, and back away from the center of the cylinder; while the forward

end of the carrier is pivoted to the conveyer and which travels in a circle.

Mr. Walker states to the Court, that since the last question was answered, there has been an adjournment or recess of one hour for lunch, and that during that time, Mr. Walker has carefully examined the whole of this deposition, to ascertain the truth or otherwise of the statement inserted by Mr. Betts in the record, in his objection to RRRDQ 478, which statement reads as follows: "Mr. Walker has continually framed his questions so as to indicate to the witness the character of the answers which Mr. Walker desires him to give." That examination has resulted in finding that the number of questions put by Mr. Walker to the witness is over four hundred, and that the number of those questions objected to by Mr. Betts as being leading, is less than fifty; and that nearly all those objections were absurd, because they were totally unfounded in the questions objected to; and that examination has resulted in showing that the charge made by Mr. Betts against Mr. Walker, that he has continually framed his questions so as to indicate to the witness the character of the answers which he desires him to give, was an untrue and an unjust charge; the fact being that the deposition shows that, except in the case of a few questions upon undebatable points, the more than four hundred questions put by Mr. Walker, appear to studiously refrain from indicating to the witness the character of the answers desired or expected.

Mr. Walker further calls the attention of the Court to the fact that this witness appears at the beginning of his deposition to have been produced by the complainant's counsel at the request of the defendant's counsel, to testify as the defendants's witness, with the same effect as if he had been produced and directed to testify by subpœna; and also calls the attention of the Court to the fact that the witness appears to be under the control of complain-

ant's counsel, by the circumstance that in the case of many questions put by defendant's counsel, the complainant's counsel suggested to the witness that he might decline to answer those questions if he chose to do so, and that in every such instance, the witness did decline to answer.

For these reasons, Mr. Walker now prays the right to put leading questions to this witness, in accordance with the law of evidence, in order that the mechanical facts to be attended to in those questions, may be stated clearly, accurately, and fully in the record, and the witness be given full opportunity to show wherein the leading questions are erroneous, incomplete, or inaccurate, if any of them should have any of those faults.

Complainant's counsel does not deem it necessary to reply to the lengthy statement of defendant's counsel; but leaves the question as to whether or not Mr. Walker has continually asked leading questions of this witness, to the court, when the whole deposition is read; but denies the right of Mr. Walker to ask leading questions of the witness in the past or hereafter, and states to the court that he has not attempted to influence the witness, or any statements of the witness, as to his knowledge of any facts.

R-R-R-D-Q. 479. It is true, is it not, that you declined to answer every question that I put to you, in respect of which Mr. Betts informed you that you might decline to answer if you saw fit; for example, in the case of Qs. 72, 73, 74, and 98?

Complainant's counsel objects to the question, on the ground that the record speaks for itself; and calls attention as one instance where the witness has answered the question, although such advice was given him, to Q. 10.

A. Yes, it is true, with the exception of Q. 10.

R-R-R-D-Q. 480. Now, Mr. Claussen, state fully and frankly what was done by me and by Mr. Betts, to in-

duce you to come to New York, and give this deposition?

A. I was asked by Mr. Betts to come to New York to testify.

R-R-R-D-Q. 481. It is true, is it not, that you came to New York to give this deposition in pursuance of that request of Mr. Betts?

A. Yes, it is true.

R-R-R-D-Q. 482. It is also true, is it not, that a few days before you received that request from Mr. Betts, I wrote you a letter requesting you to come to New York to give this deposition; and that you declined to come at my request, because you were in the employ of the Union Bag & Paper Company?

Objected to as leading.

A. Yes, it is true.

R-R-R-D-Q. 483. It is also true, is it not, that Mr. L. F. H. Betts and Mr. Francis T. Chambers, now present, are understood and believed by you to be attorneys of the Union Bag & Paper Company?

A. Yes, I understand they are.

R-R-R-D-Q. 484. It is understood by you that the Union Bag & Paper Company is paying the fees of those gentlemen while they are engaged in prosecuting this suit against the Continental Paper Bag Company, on behalf of the Eastern Paper Bag Company, as the nominal complainant?

Objected to as incompetent.

A. Yes, it is true.

R-R-R-D-Q. 485. Now please to listen carefully while I describe the mode of operation of the mechanism shown in Figures 5 and 6 of Claussen Exhibit No. 3, and after making sure that you understand exactly what my description means, please to state whether that description is right or is wrong, and if it is wrong, please to state all the respects in which it is wrong?

The conveyer 6 turns in a clockwise direction continuously, and as it turns it conveys the carrier 6a round and

round the axis of the conveyer. While the carrier 6a is being thus conveyed round and round the axis of the conveyer, it also oscillates upon the pivot by which it is attached to the conveyer toward the axis of the conveyer as far as the position shown in Figure 6, from the position shown in Figure 5, and then back again to the position shown in Figure 5. While the carrier 6a is thus oscillating, and also moving forward with the conveyer 6, the Vee plate 10 is stationary, as, indeed, it is at all times; but the tucker plate s oscillates downward, forward and upward from the position shown in Figure 5 to the position shown in Figure 6, and still further to a position somewhat in advance of that shown in Figure 6. That tucker plate, in thus oscillating, moves downward and forward that part of the upper ply of the tucked paper tube which extends from the defining edge of the tucker plate to the opposite edge of the tucker plate, and which paper thus moved downward and forward ultimately becomes that part of the complete folded paper bag which extends from the transverse line made across that bag by the defining edge of the tucker plate to that edge of the bottom of the bag which is nearest to the mouth of the bag. While the carrier is thus moving downward and forward, the lower ply of the tucked paper tube and the lower plys of the tucks in that tube, and while the tucker plate is thus moving downward and forward that portion of the upper ply of the tucked paper tube and that portion of the upper plys of the tucks of the tube which extend from the defining edge of the tucker plate to the opposite edge of the tucker plate; that part of the upper ply of the tucked paper tube which extends forward from the axis of the tucker plate to the forward end of the blank is held stationary by the Vee plate 10, and by the grippers 16 turning over upon the forward projections of that Vee plate, as shown in Figure 1 of Claussen Exhibit No. 3.

Objected to as leading.

A. Yes, the description is correct.

R-R-R D-Q. 486. It is true, is it not, that the description contained in R-R-R-D-Q. 485 applies also without any change to the machine of the defendant now in Mr. Walker's model room, with a single exception ; and that that exception resides in the fact that the paper which is held stationary by the Vee plate 10, in the machine of Claussen Exhibit No. 3, is turned upward and backward in the model room machine by the extension of the tucker plate upward from the axis of the tucker plate (which extension is in that machine) and by the hook which is fixed to the upper edge of that extension of the tucker plate?

Objected to as leading.

A. Yes, it is true.

Re-Re-Re-cross examination:

R-R-R-X-Q. 487. In the machine shown in Claussen Exhibit No. 3, the reciprocating carrier 6*a* moves inward from a position about five-eighths of an inch above the circumference of the rotary conveyer, to a position flush with the circumference of the conveyer, but never to a position within the circumference of the conveyer. Is that right?

A. Yes, it is.

R-R-R-X-Q. 488. In the machine in Mr. Walker's model-room the oscillating carrier moves inward from a position flush with the circumference of the rotary conveyer to a position within the circumference of the rotary conveyer. Is that correct?

A. Yes, it is.

R-R-R-X-Q. 489. Will you please now step into the model room and operate defendants' machine which is there; and then state the maximum inward motion of that portion of the oscillating conveyer which is remote from its pivoted end?

A. About three-eighths of an inch.

R-R-R-X-Q. 490. Will you please also state, after operat-

ing the defendants' machine in Mr. Walker's model-room, what the maximum inward motion is of that portion of the oscillating conveyer upon which the side-fingers are located, near the center of the conveyer?

A. About three-sixteenths of an inch.

R-R R-X Q. 491. When did you first see Mr. Chambers?

A. I met him in Philadelphia in about 1889 or 1890; but never saw him since that I know of until yesterday.

R-R-R-X-Q. 492. How do you know that the Union Bag & Paper Company are paying Mr. Chambers' and my fees in this case, on behalf of the Eastern Paper Bag Company?

Question objected to because the witness has not said that he knows, but only that he understands that the Union Bag & Paper Company is paying those fees; and Mr. Walker suggests that R-R-R D-Q. 484 is adopted only to prove the understanding of the witness upon that point, and not to prove whether that understanding was correct or incorrect.

A. Because I don't think they would conduct the case for the glory of it.

Deposition closed.

EDWARD E. CLAUSSEN.

Adjourned until Friday, January, 9, 1903, at 11 o'clock A. M.

Friday, January 9, 1903, 11 o'clock A. M.

Met pursuant to adjournment; counsel present as before.

WILLIAM A. LORENZ, a witness produced by the complainants' counsel, at the request of the defendants' counsel, to testify as the defendants' witness, with the same effect as if he had been produced and directed to testify by a subpœna, having been first duly sworn, testifies as follows; being first questioned by Mr. Walker on direct-examination:

Q. 1. Please state your name, residence, occupation, and when and where you were born?

A. William A. Lorenz; Hartford, Connecticut; mechanical engineer; and born in Brooklyn, New York, in 1847.

Q. 2. Please give an outline of your experience in mechanical engineering and in work connected therewith?

A. From 1866 to 1870, I was an apprentice in a machine shop. From 1870 to 1872, I was a journeyman machinist; from 1872 to 1876, I was a foreman of a machine shop; from 1876 to 1878, I was engaged in building typesetting machinery of my own invention; from 1879 to 1881, I was a mechanical expert in a piano factory, and had charge of the machinery there; from 1881 to 1883, I was chief draftsman of the machine shop of the Pratt & Whitney Company, in Hartford, Connecticut; from 1883 to 1887, I was engaged in building and designing a plant of eleven different sizes of automatic paper bag machinery; from 1887 until now, in 1903, I have maintained my own mechanical engineering office in Hartford, Connecticut, and have been engaged in making inventions, designing machinery, and acting as mechanical engineer and mechanical expert, and patent expert, in many cases and causes. More than a hundred Letters Patent of the United States have been granted to me as sole inventor, or as joint inventor, with another mechanical engineer, on inventions in many different arts, including many arts of much complexity; and I have closely examined the specifications and drawings of more than five thousand Letters Patent of the United States for the purpose of ascertaining what they represented, and I personally made a large number of Patent Office drawings of complicated machines, and I have prosecuted applications in the Patent Office, for Letters Patent of the United States.

Q. 3. When, if ever, did I first take your expert testimony on behalf of some client in patent litigation, and

when, if ever, did I last take such expert testimony from you ?

A. The first was during the year 1883 ; and the last was during December, 1902.

Q. 4. During those twenty years of 1883 to 1902 inclusive, to what extent, in general, have you and I worked together in patent litigation, and in other matters connected with letters patent for inventions ?

A. We have worked together to a considerable extent at frequent intervals during the whole time.

Q. 5. In this case of the Eastern Paper Bag Company *vs.* the Continental Paper Bag Company, I desire to take your testimony in response to two classes of questions, and to pay you on behalf of my client, the Continental Paper Bag Company, for your time and testimony as an expert, at the same rate at which I have been accustomed to pay you on behalf of other clients, or to recommend those other clients to pay you directly, in many other cases, during the last twenty years. The two classes of questions upon which I desire your testimony, are : first – questions which relate to events within your own personal knowledge, relevant to the history of paper bag machinery ; and second—expert questions which relate to similarities and differences between various paper bag machines, and paper bag machine patents, and which relate to your opinions of those similarities and differences. Please, therefore, to state whether there is any reason why you should not give testimony in this case in respect of the first of these classes of questions, and also state whether there is any reason why you should not give testimony on behalf of the defendant in this case in respect of the second of those classes of questions ?

A. There is no reason why I cannot give testimony in this case, in respect to the first class of questions. There is, however, a reason why I cannot give testimony in this case with respect to the second class of questions.

Q. 6. What reason prevents you from giving testimony in this case on behalf of the defendant, in respect of the second class of questions?

A. Because I am retained as an expert by the Union Bag & Paper Company, and because I consulted the President of that Company, Mr. L. G. Fisher, asking him whether he would object to my testifying in this case; and he told me that he would have no objection to my testifying to such things as would come under the first class of questions noted; but he told me that he objected to my testifying as to questions of opinion, which I regard to come under the second class. And I regard it as sufficient reason why I cannot testify as to questions coming under this second class.

In order that there may be no misunderstanding either by the court or Mr. Walker, of this witness' relation with the prosecution of this case; complainants' counsel states that Mr. Lorenz has already been consulted as an expert in behalf of the plaintiff, both before and after plaintiff's counsel were informed that the defendant would probably call him as a witness, and that it is the wish and expectation of counsel to continue to avail themselves of Mr. Lorenz' professional skill, throughout the further prosecution of this case.

Q. 7. Have you been retained by the Eastern Paper Bag Company, to act as expert for the complainant in this case, on the one hand; or on the other hand, have you been consulted as expert on behalf of the complainant, by virtue of the retainer which you have received from the Union Bag & Paper Company, without any retainer from the Eastern Paper Bag Company and without any communication with the President or any other officer of the Eastern Paper Bag Company.

A. I have not been retained by the Eastern Paper Bag Company directly, but may have been indirectly, through the Union Bag & Paper Company; although I have no

knowledge on that point. Whatever expert opinions I may have given to the complainant in this case, was done while I was expert for the Union Bag & Paper Company; the President of that Company saying that he desired me to give him an opinion in connection with those proceedings.

Q. 8. What "proceedings" does your last answer refer to?

A. Those proceedings refer to the questions in suit between the Eastern Paper Bag Company and the Continental Paper Bag Company.

Q. 9. When were you first consulted by Mr. Fisher, the President of the Union Bag & Paper Company, relevant to those questions?

A. I do not remember the precise time, but it is not very long ago. It may have been last Fall, or even earlier. I have no means of fixing the date now.

Q. 10. Was it not probably as early as the Spring of 1902?

A. It might have been that early.

Q. 11. I recognize, Mr. Lorenz, the entire propriety of your answers to Q. 5 and Q. 6, and therefore, I will omit, with regret, to ask you any questions belonging to the second class, specified in Q. 5; and will confine my questions to the first class specified in Q. 5. To begin with, I show you a paper bag, and ask you to state when you first saw a paper bag like it, in having inward triangular folds, and inward longitudinal folds, and a flat rectangular bottom?

A. I first saw such a paper bag in the beginning of the year 1883.

Q. 12. Please to state who showed you that bag at that time?

A. Mr. Felix W. Leinbach, of Bethlehem, Pennsylvania; and he showed me the bag in Hartford, Connecticut.

Q. 13. Please to state briefly what motive Mr. Leinbach had for showing you that bag at the beginning of 1883; and follow that statement by a brief account of what you did in respect of paper bags of that kind, from the beginning of 1883 down to 1887?

A. Mr. Leinbach's motive in coming to Hartford, Connecticut, was to have the Pratt & Whitney Company make a set of working drawings for a paper bag machine which produced a paper bag like the one you showed me when putting Q. 11. Mr. Leinbach brought a model machine to Hartford, and as I had charge of the drawing-room at Pratt & Whitney's, the machine was submitted to me, and after examining it, I informed Mr. Leinbach that the machine was not in condition for making a set of working drawings. The result of our conversation was that I was engaged by Mr. Leinbach to take entire charge of the further development of this machine, and the making of necessary experiments and drawings. With the co-operation of Mr. William H. Honiss, I made necessary experiments and working drawings, and built a machine at the works of the Pratt & Whitney Company; and that machine was completed and in running order by the Spring of 1884. The old model machine was driven by hand, having no power attachment; and bags could be made on that machine at the rate of about sixty per minute. The new machine had power attached to it, and it ran at the rate of one hundred and twenty bags per minute.

After the completion of this machine, Mr. Leinbach desired me to make a different bag in one respect, from that which this working machine made. The latter machine made a bellow-sided square bottom bag, having the bottom turned over and flattened down upon the unseamed side of the bag, and Mr. Leinbach desired me to make the machine, so that it would produce a bag which folded the bottom upon the seamed side of the bag, in order to leave the un-

seamed or smooth side of the bag perfectly clear for printing purposes. This required a complete change in the machine which had been built; and Mr. Honiss and I therefore made further experiments and working drawings, and built a machine which produced the bag which Mr. Leinbach desired. This machine ran at about one hundred and thirty or forty bags per minute; and after that we made a complete set of working drawings from which machines could be manufactured under contract. These drawings were completed, and a first set of fifteen machines were built and running by the latter part of 1886. During 1886 and 1887 we made further working drawings, and built further machines for the complete line of paper bags required for the grocery trade, that is, nineteen different sizes of bags, which required five sets of drawings, patterns and tools. From 1886 to 1887, or 1888, I believe about sixty machines, in all, were built.

Mr. Walker offers in evidence the paper bag referred to in Q. 11, Q. 12, Q. 13 and the answers thereto, and requests that it be marked "Lorenz Exhibit No. 1," and it is accordingly so marked.

Q. 14. Please to look at the file of copies of twenty-six Letters Patent of the United States, which were offered in evidence on behalf of the defendant in this case December 8, 1902; and state which of those patents, if either of them, conforms to the machine which Mr. Leinbach brought to Hartford, and showed to you in the beginning of 1883?

A. That machine conforms in some respects to patent No. 242,661, of June 7, 1881; and it corresponds in nearly all respects to patent No. 327,280, of September 29, 1885.

Q. 15. Please to state in this place to what extent that Leinbach machine was efficient in its work of making paper bags substantially like Lorenz Exhibit No. 1, when that machine was driven by a hand-wheel or crank?

A. It made bags at the rate of about sixty per minute,

and the bags themselves were good commercial bags, as long as the paper ran correctly upon the former; but that former was not perfect, and therefore the bellows-sided blanks would not reach the bottom-forming mechanism accurately or in good condition, and therefore, many bags were imperfect, for that reason. The bottom-forming mechanism however, operated very well indeed.

Q. 16. Please to state which of the patents specified in Q. 14, if either of them, conforms to the machine which you and Mr. Honiss completed into running order by the Spring of 1884?

A. That machine is shown completely in patent No. 331,722, of December 1, 1885.

Q. 17. Please to state in this place, to what extent that machine was efficient, when driven by steam power, in making paper bags substantially like Lorenz Exhibit, No. 1, except in having the bottom turned over on the unseamed side of the bag, instead of having the bottom turned over on the seamed side of the bag, which latter is the fact in Lorenz Exhibit, No. 1?

A. That machine made bags at the rate of 120 per minute, and produced a very perfect product. The machine would run frequently for an hour or more at a time, without making a single imperfect bag.

Q. 18. Please to state which of the patents specified in Q. 14, if either of them, conforms to the machine which you and Honiss built after the machine of the Lorenz & Honiss patent, No. 331,722; and which machine made the rectangular bottom of the bag to be turned over on the seamed side of the bag, in order to leave the entire unseamed side of the collapsed bag, perfectly clear for printing purposes?

A. That machine is shown in part in patent No. 361,951 of April 26, 1887; and in that patent the entire machine is shown which extended beyond the former, and a small portion of the former is shown. The former, which was

attached to that machine, corresponded subtantially to the former shown in Figures 15 and 16 of patent No. 331,722 of December 1, 1885; except that this former was reversed in position, being turned the other side up, so as to bring the seamed side of the tube upon the top of the former.

Q. 19. What in general has been the history of the sixty machines which were built from 1886 to 1888, according to the Lorenz & Honiss patent, No. 361,951, and having also the former of the Lorenz & Honiss patent, No. 331,722, attached thereto, to make tucked paper tubing, but turned the other side up so as to present the seamed side of that tucked paper tubing upward, as that tucked paper tubing was delivered by the former to the diamond folding mechanism shown in the Lorenz & Honiss patent, No.361,951?

A. Of those machines, the greater proportion were sent to the factory of L. Waterbury & Company, in Brooklyn, New York; and a number of them were sent to the factory of the Pultz & Walkley Company, at Plantsville, Connecticut; and a few of them were sent to the factory of Kilgour Brothers, Toronto, Canada. All the machines from the factories of L. Waterbury & Co., and the Plantsville factory, have recently, that is, within about two years, been sent to the factory of the Union Bag & Paper Company at Sandy Hill, New York, where they are still in operation, when I saw them last, within about a year. The machines in Toronto, I believe, are still running, and they were running when I was last in Toronto a few years ago.

Q. 20. About how many millions of paper bags, substantially like Lorenz Exhibit No. 1 have been made on those sixty Lorenz & Honiss paper bag machines during the fifteen or more years they have been running?

A. As closely as I can estimate, about ten thousand million bags.

Q. 21. How many of those Lorenz & Honiss paper bag machines have been made, in addition to the first sixty?

A. Of that, I have no accurate record ; but as closely as I can estimate, I think there were about forty or fifty more machines built.

Q. 22. Now, please to look at the Lorenz & Honiss patent, No. 333,647, and state what if anything, was done at any time, toward building a machine in partial or in complete conformity to that patent ?

A. A machine was built in partial conformity to that patent, having folding blades for folding the bottom of the bags, like those shown in the patent ; which blades, however, were moved forward and back, and were turned over in a different manner, or rather by different mechanism. The machine which was built, had the rotating cylinder and the feeding rolls for a tube, and other parts, as shown in that patent ; with the exceptions of those enumerated before, and with the exception of the final or flap-folding devices, which devices were not built at all.

Q. 23. Did that machine have the fixed blade 31, the turning blade 33, and the presser-plate 34, on each side of the cylinder, in the reciprocal relations thereto, indicated in figures 13, 14, 15 and 16, of the drawings ?

A. It did.

Q. 24. By what mechanism were those three things on each side of the machine reciprocated from the outward positions shown in Figures 13 and 14, to the inward positions shown in Figures 15 and 16 ; and by what mechanism were the turning blade 33, and the presser-plate 34, turned over through about one hundred and eighty degrees, when in their inward position over the border of the periphery of the cylinder, as shown in Figures 17, 18 and 20 ?

A. They were thus operated by a mechanism constructed substantially like that shown in patent, No. 361,951, of April 26, 1887, and as shown in Figures 19, 20, 21 and 22. This mechanism was attached to the cylinder of patent, No. 333,647, and rotated with that cylinder.

Q. 25. Did you ever run the machine of patent, No.

333,647, either by hand-wheel or by steam power, with a view to causing it to open out one end of a tucked paper tube into the box-like form shown in Figure 20, of that patent; which result is stated in paragraph 2, of the patent, to be one of the functions of the machine?

A. I did, and I ran that machine by means of a crank, by hand, only.

Q. 26. Please to state with what efficiency that machine performed that function, when thus run by you?

A. That machine did that work very efficiently, as long as the tube could be fed to it evenly. No former was attached to that machine, and it was very difficult to make the tubing feed accurately into the machine; but the blade-folding devices certainly operated well, when the tube passed correctly to them.

Q. 27. Please to specify by reference to the drawings of the Lorenz & Honiss patent, No. 333,647, what instrumentalities were used in that machine for folding the box-like form shown in Figure 20, and also in Figures 3 and 4, down into the diamond form shown in Figures 5 and 6 of the drawings?

A. Those devices consisted of the finger 51, and the flattening-roll 53, shown particularly in Figures 10 and 11.

Q. 28. At about what speed did you run that machine by hand, when you supplied it with tucked paper tubing by hand?

A. I do not remember distinctly what that speed was; but it may have been as fast as at the rate of one hundred revolutions per minute.

Q. 29. Now please to look at the Lorenz & Honiss patent, No. 337,965, of March 16, 1886, and state how many, if any, machines were built at any time, in full conformity to that patent?

A. A machine was built which conformed to that patent substantially in all respects: and it was built, I believe, during the winter of 1889 and 1890.

Q. 30. In what machine shop was that machine built?

A. A portion of that machine was built in the shop of the Pratt & Whitney Company, and a portion thereof in the shop of Woodward & Rogers, of Hartford, Connecticut.

Q. 31. State whether you ran that machine to manufacture its product of diamond-shape paper bag blanks shown in Figure 5 of the drawings, by hand power or by steam power, or by both; if you ran that machine at all?

A. That machine was run in both ways by me, to produce that result.

Q. 32. With what efficiency did that machine produce those diamond-shape paper bag blanks in respect of speed, and in respect of excellence of product, and in respect of percentage of waste product?

A. That machine was run by hand at a speed of about sixty blanks per minute, and it was run by power at a speed of about one hundred per minute, and the product in both cases was excellent, and the waste was little or nothing.

Q. 33. Please to look at the Lorenz & Honiss patent, No. 337,966, of March 16, 1886, and state whatever you did toward making a model or a machine in conformity to the drawings of that patent?

A. A working machine was built according to this patent—according to the left-hand end of what is shown in Figures 5 and 6, and a folding device was made corresponding to what is shown in the right-hand end of that machine, but this was never connected to the working part just described. The machine which was built was a carriage, such as is shown in Figures 5, 6, 7, 8 and 9 substantially, and that carriage had the plates 47 and 67, the latter plate being pivoted at 68, and turning over like that plate, and these two plates were furnished with the three pairs of grippers 61 and 62, 82 and 83, and 63 and 84, all as shown in that patent.

Q. 34. What was proved by that machine, in respect of the merit, or otherwise, of the combination of a presser-plate, provided with the grippers 61, 62 and 63, with the presser-plate 67, provided with the grippers 82, 83 and 84, of the Lorenz & Honiss patent No. 337,966?

A. The folding of the diamond was proved by that combination; such a diamond being shown in Figure 3, and the folding was readily accomplished, and good diamonds were produced.

Q. 35. Please now to look at the Appel patent No. 387,573 of August 7, 1888, and state when and where, if ever, you saw a paper bag machine which was made in substantial conformity to the drawings of that patent?

A. I saw a machine which corresponded substantially with the drawings of this patent, as far as I am able to remember the details of that machine. I believe I saw that machine about three years ago, or about 1900. I saw this machine in Philadelphia.

Q. 36. State whether you saw that machine running; and if so, state what was its efficiency in respect of speed, excellence of product, and proportion of waste?

A. I did not see that machine running, and I know nothing of my own knowledge either as to its speed or its waste, or as to how well it operated; but some bags were shown me which were said to have been made upon that machine, and these bags were good ones in all respects.

Q. 37. Now, please to look at the Stilwell patent No. 407,794 of July 30, 1889, in connection with the Stilwell patent No. 417,346 of December 17, 1889, and state when and where, if ever, you saw a Stilwell paper bag machine which had been made in substantial conformity to the first of those Stilwell patents, with or without the improvements on the first patent which are shown in the second?

A. I saw a portion of such a machine, namely, the bottom or diamond folding portion thereof, in Boston, Massachusetts, in 1891; and I have seen complete machines of

this kind, at the factory of the Union Bag & Paper Company, at Sandy Hill, New York, about the year 1900, and about 1902.

Q. 38. How many of those Stilwell machines were running in the Sandy Hill factory, when you saw them there?

A. I cannot give any accurate reply to this question, because I did not count the machines; and there may have been seventy-five machines, or less, or more.

Q. 39. What was the fact about the efficiency of those Stilwell machines in respect of speed, excellence of product, and proportion of waste, when you saw them in the Sandy Hill factory?

A. Those machines ran at a high rate of speed; I believe even faster than the machines built by myself and Mr. Honiss according to patent, No 361,951. The product was excellent, and the waste was no more and possibly even less than the waste made by the Lorenz & Honiss machines just noted.

Q. 40. Please now to look at the Murchie patent, No. 540,556 of June 4, 1895, and state when and where, if ever, you saw a paper bag machine which had been constructed in conformity to the drawings of that patent?

A. I believe I saw one or two of those machines, or at least machines which resembled this patent somewhat, during the year 1901, at the factory of the Union Bag & Paper Company, in Kaukauna, Wisconsin.

Q. 41. State whatever you know and remember, about the product of those Murchie machines in Wisconsin, in respect of speed, excellence of product, and proportion of waste?

A. I do not remember whether those machines were running steadily when I saw them, or whether they were started up merely to show to me. As near as I can remember, the machines which I looked at were running about one hundred per minute. I do not believe I ex-

10886

amined the product, but only looked at the method in which the diamond was folded.

Q. 42. Please to look at the paper bag I now show you, and state, if you can, on what machine it was made?

A. This bag appears to have been made upon one of the machines sent to Kilgour Brothers, of Toronto, Canada, as it has a printed mark thereon, namely, the letter K, with a figure 4 upon it, and I recognize that mark as being the mark of Kilgour Brothers' paper bag. This bag, however, is like the bags produced by the machine of patent, No. 361,951, of April 26, 1887.

Mr. Walker offers in evidence the bag referred to in the last answer, and requests that it be marked "Lorenz Exhibit, No. 2," and it is accordingly so marked.

Q. 43. Please to look at the paper bag I now show you, and state, if you can, on what machine it was made?

A. I believe that bag was made on the Stilwell machine which is shown in the two patents to Stilwell, No. 407,794, of July 30, 1889, and No. 417,346, of December 17, 1889.

Q. 44. About how many paper bag machines of all kinds, doing that work, have you seen running in the factory of the Union Bag & Paper Company, at Sandy Hill, New York, making paper bags having inwardly-inclined longitudinal folds, and inwardly-inclined triangular folds, like the bag last shown you, and like Lorenz Exhibit, No. 2?

A. I did not count the machines which I saw at Sandy Hill, and can give no accurate statement in reply to this question. I might have seen as many as two hundred, and the number might have been considerably less than that, and might have been more.

Mr. Walker offers in evidence the bag referred to in Q. 43, and the answer thereto, and requests that it be marked Lorenz Exhibit, No. 3, and it is accordingly so marked.

Q. 45. Please to state the name of the patentee, if any,

to whom a patent was first granted upon a paper bag having inward longitudinal folds and inward triangular folds, and a flat rectangular bottom?

A. Mark L. Deering.

Q. 46. When did that patent expire?

A. In May, 1897.

Q. 47. To what extent was that kind of paper bag known as a Deering bag?

A. That bag was known as the Deering bag to a limited extent, by some of the inventors engaged upon machinery for making that bag.

Q. 48. What name was originally given for commercial purposes, to that form of the Deering bag which was made upon the Lorenz & Honiss machines, and one of which is Lorenz, Exhibit No. 2?

A. That bag was known as the S. O. S. bag, which letters signified, Self-Opening Square bag.

Q. 49. What name was originally given for commercial purposes, to that form of a Deering bag which has been made on the Stilwell machines, and of which Lorenz Exhibit, No. 3, is one?

A. They have been called improved square bags, or automatic bags, or improved automatic bags, I believe.

Q. 50. State, if you know, what name has been given commercially, to that form of the Deering bag made and sold by the Continental Paper Bag Company; and of which Claussen Exhibit, No. 7, has been proved in the deposition of Mr. Claussen to be one?

A. I do not know.

Q. 51. How many other kinds of machines than the Stilwell machines and the Lorenz & Honiss machines, and the Murchie machines, have you seen at work making any form of Deering bag; in large numbers commercially?

Objected to as indefinite in not defining what is meant by "kind of machines."

A. I remember at present two machines.

Q. 52. What were the names of those two machines in addition to the Stilwell, the Lorenz & Honiss, and the Murchie machines?

A. One was another Murchie machine, and the other was a Dulin machine.

Q. 53. Where did you see those machines running, and in about what numbers?

A. I saw only a few of the Murchie machines, and one or two of the Dulin machines.

Q. 54. Do you know of any machines which have been made and used in large numbers in the manufacture of Deering bags, other than the Stilwell machines, the Lorenz & Honiss machines, and the Claussen machines?

Objected to as already answered.

A. The Murchie machines may have been made in large numbers; and I believe Purvis machines have been made in considerable numbers; but this I do not know of my own knowledge.

Q. 55. How many Purvis machines did you ever see?

A. I have seen none.

Q. 56. Nothing has yet been said in this record about those Purvis machines, and I do not think them particularly material; but inasmuch as you have mentioned them, I will ask you to state whether they are purely mechanical in their mode of operation, or whether, also they employ pneumatic pressure to assist in the opening out of one end of a tucked paper tube and folding it down into a diamond form?

A. I believe those machines employed both methods together in one machine.

Q. 57. According to your last information, which machine for manufacturing Deering bags has been used in the United States during the last twelve or thirteen years in larger numbers than any other machine for making those bags?

A. I believe the Stilwell machines.

Q. 58. You have stated that the first sixty Lorenz & Honiss machines have thus far made about ten thousand millions Deering bags; and you have stated that about forty additional Lorenz & Honiss machines have been built; and now you have stated that the Stilwell machines have been used with larger numbers than all the Lorenz & Honiss machines put together, or words to that effect. Now, please to state about how many Deering paper bags have been made on Stilwell machines, and on Lorenz & Honiss machines put together, since the Lorenz & Honiss machines were introduced in 1886, and since the Stilwell machines were introduced about 1889 or 1890?

A. I have no means of estimating this amount with any degree of accuracy. The amount is probably more than twenty-five thousand millions.

Q. 59. Please now to look at the Lorenz & Claussen patent No. 534,512, of February 19, 1895, and state whether any machine was ever built in conformity to the drawings of that patent, including the respects in which those drawings differ from the Stilwell patent No. 417,346, upon which the Lorenz & Claussen patent purports to be an improvement?

A. I have no knowledge that such a machine has been built.

Q. 60. How did it happen that you and Mr. Claussen cooperated in inventing the machine of that Lorenz & Claussen patent No. 534,512. I mean to inquire for a general account of Mr. Claussen's doings with you in paper bag machinery, and I do not mean to inquire how you particularly devote yourselves to that particular invention?

A. Mr. Claussen was engaged by me as a draftsman in, I believe, the year 1884, to make drawings for paper bag machinery, and during a portion of the time and nearly all of the time from 1884 until 1895, Mr. Claussen was associated with me as a draftsman, and as inventor, in paper bag machines; and it was during this time and about the

year 1893, that this particular patent was developed by us.

Q. 61. Please to look at the Taylor patent, No. 439,763, of November 4, 1890, and at the Kelliher patent, No. 439,843, of November 4, 1890, and at the Patterson patent, No. 446,839, of February 17, 1891, and at the Pettee patent, No. 542,447, of July 9, 1895; and state whether you ever saw a paper bag machine which had been constructed in conformity to either of those patents?

A. I have not.

Q. 62. When and where, if ever, did you see a paper bag machine, or model of such a machine, which had been constructed in conformity to the Liddell patent, No. 558,969?

A. I have seen a model of a portion of that machine shown in this patent, some time during the year 1902.

Q. 63. If that model was shown to you by counsel for the complainant in this case, with a view to this litigation, I do not feel at liberty under the conditions stated in your answer to Q. 6, to ask you any questions about that model; and I therefore inquire who it was that showed you that model, and where that event occurred?

A. That model was shown to me some time during the year 1902, by Mr. Ward, at the factory of Garvin Machine Co. in New York.

Q. 64. Do you understand that Mr. Ward had caused that model to be constructed for the use of complainant's counsel in this case?

A. I understood that to be the case.

Q. 65. When, if ever, so far as you know, or have been informed, was any other machine or model ever made in conformity to the drawings of the Liddell patent, No. 558,969?

A. I do not know of any such machine.

Q. 66. When, if ever, did I show you a paper bag machine in my model-room, which appeared to you to be

adapted to make substantially such bags as Claussen Exhibit No. 7, in a smaller size than that exhibit?

Objected to on the ground that the question assumes a state of facts which has not been proved; namely, that the machine referred to will make the bags indicated in the question, and that the witness knows such to be the fact.

Question withdrawn.

Q. 67. When, if ever, did I show you in my model-room, a massive and complicated machine weighing one or two tons?

A. You showed me such a machine about two or three weeks ago.

Q. 68. What kind of a machine was that?

A. A paper bag machine.

Q. 69. What name or designation was given to that paper bag machine by me when I showed it to you?

Objected to as immaterial.

A. I believe you called it either the Claussen Machine, or the Claussen Mortson Machine.

Q. 70. To what extent did you examine that machine when I showed it to you?

A. I saw that machine, I believe, about three quarters of a minute. I had no opportunity to examine it very closely.

Adjourned until Saturday, January 10, 1903, at 11 o'clock A. M.

Saturday, January 10, 1903, 11 A. M. Met pursuant to adjournment; counsel present as before.

Q. 71. To what extent have you examined the Claussen paper-bag machine in my model-room, since the adjournment from yesterday to this forenoon?

A. I have examined this machine for about one hour and a half.

Q. 72. I do not mean to inquire for any particular fact that you discovered in the machine, or for any opinion which you may have relevant to the machine, or any part thereof, because such questions would fall within the second class specified in Q. 5, which I understand you do not feel at liberty to answer in this deposition. But I do ask you whether you now understand that machine in general and in detail?

A. I do.

Q. 73. Please to state the number and date of the Deering patent, mentioned in your answers to Q. 45 and 46?

A. It was reissue number 10,083, of April 11, 1882; the original patent having been No. 227,350, dated May 11, 1880.

Q. 74. Were you expert witness for either party in the case of the Union Paper Bag Machine Co. *v.* Waterbury, in which Claim 2 of that patent was held to be void by Judge Wallace, in 1889, and in which Claim 1 of that patent was held to be void by Judge Coxe, in 1893, and also by the Circuit Court of Appeals for the Second Circuit, in 1895?

A. I was a witness for the defendant, L. Waterbury & Co.

Q. 75. Do you remember on what ground the complete invalidity of that Deering patent was finally established by the Circuit Court of Appeals?

Objected to as immaterial and as incompetent, since the record is the best evidence in that case.

Mr. Walker withdraws the question and refers the Court to the case of the Union Paper Bag Machine Co. *v.* Waterbury, 39 Fed. Rep., 389, and 58 Fed. Rep., 566, and 70 Fed. Rep., 240.

Q. 76. Please to look at the Liddell patent, No. 558,969, and state to what extent, if at all, you are acquainted with that patent?

A. I am fairly well acquainted with that patent.

Q. 77. Please to look at the Claussen patent, No. 598,497, and also at the Claussen & Mortson patent, No. 635,090, and state to what extent, if at all, you are acquainted with those patents?

A. I am fairly well acquainted with those two patents.

Q. 78. Please to look at the Cross patents, Nos. 222,464, of Dec. 9, 1879, and 240,972, of May 3, 1881, and state when you first became acquainted with those two patents?

A. I believe I saw both of those patents first in the year 1883.

Q. 79. Please to look at the Crowell patent, No. 510,410, of Dec. 12, 1893, and state when, if ever, you first became acquainted with that patent?

A. I believe I became acquainted with that patent a little while after it was issued, in the year 1893 or 1894.

Q. 80. Please to look at the Crist patent, No. 543,571 of July 30, 1895, and state when, if ever, you first became acquainted with that patent?

A. I believe I became acquainted with that patent soon after it was issued, in the year 1895.

Q. 81. What is the name in general use of the kind of paper bags which the two Cross patents and which the Crowell patent and which the Crist patent purport to be adapted to make?

A. Those bags are sometimes called satchel-bottom bags or square-bottom bags or simply flour sacks; but they are generally called simply satchel-bottom bags.

Q. 82. In your investigations into the art of paper bag machinery, what did you learn about the time of origin of the satchel-bottom bags, which the Cross patent, No. 222,464, and the Cross patent, No. 240,972, and the Crowell patent, No. 510,410, and the Crist patent, No. 543, 571, purport to be adapted to make?

A. I learned that bags of that kind have been made

for many years previously to the date of these patents, in 1879.

Q. 83. What did your investigations show in respect of what man or what men were the first to invent or build a machine to manufacture Deering bags substantially like Lorenz Exhibit Nos. 1, 2, and 3?

Complainant's counsel submits that that portion of the question, asking the witness "who invented" is a question belonging to the second class of interrogatories mentioned in Q. 5. Complainant's counsel sees no objection to the other portion of the question.

A. Leinbach, Wolle & Brunner, in the year 1881.

Cross examination:

XQ. 84. Did the gentlemen mentioned in your last answer actually build a machine to make a Deering bag in 1881?

A. That I do not know.

XQ. 85. When was the first machine built for making a Deering bag, and by whom?

A. I do not know of my own knowledge when a machine was built nor who built it. I was told by Mr. Leinbach that the first machine was built by Mr. Brunner in Mr. Brunner's shop in Bethlehem, Penn. The first machine which was shown to me in Hartford, Connecticut, is the machine which Mr. Leinbach told me that Mr. Brunner had built.

XQ. 86. When was this machine shown you?

A. In the beginning of the year 1883.

Re-direct examination:

R-D-Q. 87. Was this machine mentioned in your last answer the same machine which was mentioned in your answer to Q. 14?

A. It was the same machine.

Deposition closed. WILLIAM A. LORENZ.

Adjourned until Monday, January 12, 1903, at 11 o'clock A. M.

Monday, January 12, 1903, 11 o'clock A. M. Met pursuant to adjournment, counsel present as before.

CHARLES D. KING, a witness produced on behalf of the defendant, having been duly sworn, testifies as follows, in reply to questions put by Mr. Walker:

Q. 1. Please state your name, your residence and your occupation, and where and when you were born.

A. Charles D. King, residing at 358 Eighth street, Brooklyn, New York; I am thirty-one years old; born in 1871; Chicopee Falls, Massachusetts; occupation, draftsman.

Q. 2. To what extent and how long, if at all, have you been engaged in making mechanical drawings?

A. I have been engaged in making mechanical drawings for something over thirteen years.

Q. 3. To what extent, if at all, have you, during those thirteen years, been engaged in making mechanical drawings to represent complicated automatic machinery?

A. Well, for ten years at least.

Q. 4. Please to look at the Liddell Patent No. 558,969, of April 28, 1896, and state when, if ever, you first studied that patent?

A. I first studied the Liddell Patent No. 558,969, in June of 1902.

Q. 5. Please to look at the drawing I now show you, which is entitled "Liddell 558,969," and state who made that drawing?

A. I made that drawing.

Q. 6. Please to ignore, at this moment, what is indicated by the letter X, and by the letter Y, on that drawing, and state what the drawing represents?

A. The drawing represents certain parts of Figure 1 of the Liddell PatentNo. 558,969.

Q. 7. On what scale did you make the drawing, as compared with Figure 1 of the Liddell patent?

A. Four times the scale of the drawing of the patent.

Mr. Walker offers in evidence the drawing which has been made by the witness; and requests that it be marked "Defendant's Drawing No. 10," and it is accordingly so marked.

Objected to as immaterial and irrelevant.

Q. 8. For what purpose did you make "Defendant's Drawing No. 10"?

A. I made this drawing for the purpose of showing the path of the edge W, of the plate E, during one revolution of the shaft L.

Q. 9. What does the drawing contain to indicate the path of movement of the edge W, of the forming plate E, during one revolution of the shaft L?

A. It contains the line marked X, which is a full line, showing the downward movement of the edge W, and the dotted line Y, showing the upward movement of the edge W.

Q. 10. Suppose the cylinder C to be absent, so as not to interfere with the movement of the former plate E, and suppose the edge W of that former plate, to occupy the position shown in Defendant's Drawing No. 10, when the cams, K and K′, and the arm F′ occupy the position shown in the same drawing, and then suppose the shaft L to be revolved through one revolution, in an anti-clockwise direction, as indicated by the arrow under the cam K′; and on those suppositions state how the edge W of the plate E would move, during that revolution of the shaft L in Defendant's drawing, No. 10?

A. The edge W of the plate E, would pass downward on the path indicated by the line X, and it would return upward along the line Y, back to its original position.

Q. 11. Suppose the parts shown in defendant's drawing, No, 10, minus the cylinder C, to be constructed in metal, in exactly the forms and proportions shown in Figure 1, of the Liddell patent, No. 558,969; how would the edge W,

of the former plate E, of that patent, travel during one revolution, in an anti-clockwise direction of the shaft L?

Objected to as immaterial, irrelevant and incompetent.

A. the edge W, of the plate, would go through a path similar to the one shown in defendant's drawing No. 10,

Q. 12. About how much time did you occupy in your work of ascertaining that the edge W, of the former plate E, of the Liddell patent, would pass through the paths indicated by the letters X, and Y, of defendant's drawing, No. 10, while the shaft L, of the Liddell patent, would be turning one revolution, in an anti-clockwise direction?

A. In simply pencilling out and verifying the work, about two days.

Q. 13. Please to state in words, the method you pursued in making that ascertainment?

A. I first made a tracing of the two cams K and K′, and of course I located my center of shaft of the cylinder, and the center of the gear M′, and then I made a small model of the arm F′ and F, and the plate E, cut out of cardboard. Then I selected points around the circumference of the cams, for the successive positions of the edge of the arm F′; then I drew an arc through this point of the arm F′, the radius of which was equal to the distance from it to the center of oscillation. I had my tracing put on the center of the shaft L, and then swung it around so that the first indicated point, which we will call 2, on the periphery of the cam K′, would come on the arc that I just mentioned.

Then I placed the model of the arms F′ and F, so that the point of F′ would come on this place where the cam came to the circular arc. This gave the position for the center of oscillation of the plate E, to the point corresponding to 2. Then I laid out the position of the roll of the rod K to the same position 2, as it would come from the cam as it would be on the little tracing, and now I laid in the plate E, having center at the point 2, as if there were no

gears M′, and M and N. Then from this position, I laid out a circle equal to the pitch diameter of the gear M, from the center 2, and also laid out the pitch diameter of the gear M′, and ascertained from the movement of the cam K, the amount the gear M′ would be turned back by the cam K, and actuated by the roll and rods, K and K′. Now, this distance of the movement of the gear M′, I transferred down to the gear M. Now, where I laid out the plate E, I moved this plate E down, a distance equal to the movement of the gear M′, as actuated by the cam K, and this enabled me to get the first point 2, of the irregular line F, and I proceeded in a similar manner for each successive point that I determined, around the periphery of the cam K′; and through these points that I obtained, I drew first the full line X, for the downward movement, and afterward the dotted line Y, for the return movement.

Q. 14. Please to produce whatever things you have left (not including your draftsman's implements) which you made and used in the work of ascertaining the paths of the edge W, of the forming plate E of the Liddell patent, in the way you have described?

A. This cardboard drawing is what I worked out, as I have testified, and this is the tracing that I used showing the cams K′ and K, and this is the model of the arms F′ and F, and the model of the plate E.

Mr. Walker states that the pencilled drawing and the pencilled tracing and the pasteboard models, produced by the witness, in response to the last question, will be delivered to the complainant's counsel and may be taken away by him and submitted to expert scrutiny, at his leisure, with a view to enable him to ascertain whether the result arrived at by the witness, in respect of the paths through which the edge W of the forming plate E of the Liddell patent would pass, under the circumstances specified in the testimony of the witness, was the true result on the one hand, or whether, on the other hand, the

witness made some error in his calculations which put that result out of conformity to accuracy.

Complainant's counsel thanks Mr. Walker for the offer, and presumes that Mr. Walker will also offer the cardboard tracing and models in evidence in order that the Court may itself, if it desires to do so, investigate this same subject.

Mr. Walker states that he has not thought it necessary to offer the pencilled drawing and the pencilled tracing and the pasteboard models in evidence; and that he has not thought it expedient to do so, because they are so complicated that they cannot be understood by anyone without many hours of close professional study in connection with the Liddell patent, and Mr. Walker suggests that the only material matter connected with this subject is the result shown in defendant's drawing No. 10; and that the proper way to ascertain the correctness or otherwise of that result, is for some expert draftsman to take plenty of time to study the testimony of this witness, in respect to the method pursued by him in reaching that result, and to include in that study a close geometrical examination of the pencilled drawing and the pencilled tracing, and the pasteboard models used by the witness in reaching that result. And Mr. Walker suggests that in order to make sure of detecting any error, if any, which the witness made in reaching that result, that his cross-examination may be postponed a few days or a few weeks, while some expert draftsman for the complainant, is critically reviewing the work which has been done by the witness.

Complainant's counsel replies that even should he adopt the suggestion of Mr. Walker, that these pieces of paper be submitted to an expert geometrician and draftsman, for the purpose of ascertaining whether Mr. King's productions are correct or not, yet it seems to him that these papers should also be offered in evidence by Mr. Walker, in order that the court itself may have these

papers before it, so that if the court be advised, it may institute proceedings on its own account or examine the drawings itself, to ascertain whether Mr. King's productions are correct, and complainant's counsel asks Mr. Walker whether he intends to offer these drawings in evidence.

Mr. Walker states that if he offers the drawings in evidence now, they ought not regularly to be taken away by the complainant's counsel, and submitted to expert examination; because they are in pencil and not in ink, and during that examination, would be liable to be obscured by friction in use, and could nott hereafter be proved, with any certainty, to be in the same condition that they are at present. Moreover the rule of court requires that all the evidence should be printed for the use of the court, and it is difficult, if not impossible, to reproduce copies of the pencilled drawings, and the pencilled tracing, in conformity to that rule, and Mr. Walker suggests that if complainant's experts can find any material fault in the calculations of this witness, the discovery of that fault will practically cancel the result reached by him; and that if complainants' experts cannot discover any such fault, during several days or several weeks of examination, it would be unprecedented for the court to "institute proceedings on its own account" in the search of such a possible fault.

Complainant's counsel again asks Mr. Walker if he intends to offer the papers produced by the witness, in evidence.

Mr. Walker states that he will not offer the pencilled drawings, nor the pencilled tracings, nor the pasteboard models, in evidence to-day; and he may or may not offer them in evidence hereafter.

Complainant's counsel calls the attention of the Court to the somewhat surprising attitude of Mr. Walker, in asking the witness to produce these papers and cardboard

models, and then refuses to offer them in evidence in order that the Court may see them.

Q. 15. Who employed you to examine and study the Liddell patent, No. 558,969, of April 28, 1896, and to make the ascertainment of the paths of the edge W, of the former plate E, of that patent, as you have stated?

A. Mr. Walker.

Q. 16. What, if anything, did Mr. Walker tell you at that time, or before that time, about his motive for wanting that ascertainment to be made?

Objected to as immaterial.

A. He gave me no reason why he wanted to have it done.

Q. 17. What, if anything, did you know at that time, or while you were doing that work, about any litigation in which the Liddell patent, No. 558,969, was involved or might become involved?

Objected to as immaterial.

A. I really didn't know which side Mr. Walker was on.

Q. 18. Now, Mr. King, please to state what degree of certainty or uncertainty you have in your own mind, upon the question whether the result of that ascertainment which you have delineated by the lines X and Y of defendant's drawing No. 10, is the correct result?

Objected to as immaterial.

A. I feel certain that the correct result is very close to what I have shown, in defendant's drawing, No. 10.

Q. 19. After you had reached that result, by the method and means you have mentioned, what, if anything, did you do to verify your work, so as to make sure of its substantial correctness?

A. I went over the measurements and methods several times, to ascertain if there were any errors; and I found there were no errors that I could discover.

Complainant's counsel suggests that the witness be asked to ink in the pencilled lines upon the single sheet of

1102

card board, and upon the single sheet of tracing paper. which he produced in answer to Q. 14, and also to ink in any writings on these two articles, and to ink in any writings or other markings appearing in pencil upon the three pieces of card board, constituting the models referred to by the witness, in the same answer, in order that if the cross-examination is suspended, or the aforesaid articles are hereafter offered in evidence, that there can be no possible question, but that they are in the same condition then as they are now, and in order that they may not be as Mr. Walker suggests, "obscured by friction in use."

Q. 20. Please to state whether it is possible to ink in the pencilled drawing, and the pencilled tracing, mentioned in the suggestion of complainant's counsel, in such a way as to preserve unchanged all the fine lines and all the small numerals thereon.

A. They would not be quite as accurate, but very nearly as accurate as they are now.

Q. 21. How long would it take you to do all the inking in, which has been suggested by the complainant's counsel?

A. Well, I should think I would want four or five hours to do it very carefully.

Q. 22. Will you please to ink in the pencilled drawing, and the pencilled tracing, and the paste board models which you have produced in reply to Q. 14, and again produce those things thus inked in, to-morrow morning at eleven o'clock?

A. Yes, sir.

Adjourned until January 13, 1903, at 11 o'clock A. M.

Tuesday, January, 13, 1903, 11 o'clock A. M., Met pursuant to adjournment; counsel present as before.

Q. 23. Please now to produce all the drawings, tracings and pasteboard models which you made and used in ascer-

taining the result shown in defendant's drawing, No. 10; if you have inked them in in pursuance of the request made to you yesterday.

A. I produce here the cardboard drawing, and two tracings which I used, and three cardboard models which I used in accomplishing the result shown in defendant's drawing, No. 10.

Q. 24. Who inked in the cardboard drawing and the two tracings, and three pasteboard models which you now produce?

A. I inked them in.

Q. 25. When did you ink them in?

A. Yesterday afternoon.

Q. 26. What certainty or uncertainty, as the case may be, do you feel in your own mind upon the question whether the drawing and the tracings and the models were inked in correctly by you, so as to now present in black ink, what yesterday they presented in pencil?

A. They are exactly the same result.

Mr. Walker offers in evidence the cardboard drawing, and the two paper tracings, and the three pasteboard models produced by the witness, and requests that they be marked "King's Exhibits, Nos. 1, 2, 3, 4, 5 and 6," and they are accordingly so marked.

Objected to as immaterial and irrelevant.

The cross examination of this witness is postponed, by agreement, to some future time, before the end of January, 1903.

Tuesday, January 20, 1903, 2 o'clock P. M. Met pursuant to adjournment; counsel present as before.

The witness CHARLES D. KING is now produced by defendant's counsel at the request of complainant's counsel, for cross examination by the latter.

Cross examination by Mr. Betts:

X-Q. 27. As I understand you, you have had no practical experience in a machine-shop; but your experience has been devoted solely to making the drawings of machines. Is that correct?

A. I have had some practical experience with machines.

X-Q. 28. With what class of machines have you had practical experience?

A. Mostly machines used in making bicycles.

X-Q. 29. In making Defendant's Drawing, No. 10, did you take into account, or did you leave out of account, any back-lash?

A. I disregarded back-lash.

X-Q. 30. How long a time did you consume in making your calculations, in order to enable you to lay out Defendant's Drawing, No. 10?

A. Why, I was calculating all the time I was doing it; about two days I was engaged on that work.

X.Q. 31. Do I understand then that you only spent two days from the time Mr. Walker asked you to ascertain the path of the edge W, of the former plate E, of the Liddell patent, until you completed Defendant's Drawing, No. 10?

A. I didn't include Defendant's Drawing, No. 10, in the two days. I spoke of the two days as the time consumed in laying out in pencil the drawings called "King Exhibits, Nos. 1, 2, 3, 4, 5 and 6."

X-Q. 32. And how much longer than these two days, did you take to lay out Defendant's Drawing, No. 10?

A. Well, I think I was engaged about two days more.

X-Q. 33. Are King Exhibits 1, 2 and 3, the only

sketches or drawings which you made to ascertain what the path of the edge W of the plate E of the Liddell patent was?

A. Well, I did start a sketch the actual size of the patent to see that I made no mistake; but I worked out only four or five points in the line X.

X-Q. 34. Referring to Defendant's Drawing, No. 10, will you please state what is the governing or controlling element or factor in determining the path of the edge W, of the plate E?

Question objected to because it assumes that there is some one governing or controlling element or factor in determining the path of the edge W, of the plate E, contrary to the teachings of the Liddell patent, which shows a plurality of governing and controlling elements.

Complainant's counsel calls attention to the suggestive character of the objection made by Mr. Walker within the hearing of the witness.

Mr. Walker claims that he has a right to expose on the record every misleading question put on cross-examination, and that X-Q. 34, is plainly such a question put, not for the purpose of ascertaining truth, but for the purpose, if possible, of misleading the witness into error.

A. Why, I don't see how you can say that there is one governing factor. All the parts shown on the drawing, go to help bring about the result, as shown by the lines X and Y.

X-Q. 35. What are the governing or controlling elements or factors in Defendant's Drawing No. 10, which determine the path of the edge W, of the plate E, in that drawing?

A. Well, there is the shaft L, the cams K′ and K, the levers F′ and F, the gears M′, M, N, the plate E, the rod k, with its roll, the link k′, and the spring. That is all.

X-Q. 36. Have you made any calculations to ascertain whether any or all of the parts shown in Defendant's

Drawing, No. 10, could be altered, so that the edge W, of the former plate E, of the Liddell patent, would pass properly along the periphery of the cylinder C?

Mr. Walker objects to this question, because it refers to a subject not mentioned in the direct examination, and is therefore improper on cross-examination. The deposition of this witness having proved that the mechanism shown in Defendant's Drawing, No. 10, would be useless; the burden now rests upon the complainant, by its own witness or witnesses, to prove, if it can, that that mechanism can be changed, in such a way and to such an extent, as to make it useful, and to prove the character of such change or changes, and to prove that they could be made by any mechanic skilled in the manufacture of paper bag machinery.

Mr. Walker also objects to this question as immaterial, because the fact, if it be a fact, that this witness has succeeded in calculating how the parts shown in Defendant's Drawing, No. 10, could be altered, so as to make those parts useful, does not prove that such alteration would be within the reach of every mechanic skilled in the manufacture of paper bag machinery.

A. Yes, sir; I have made such calculations.

X-Q. 36½. And what did those calculations consist of? Were they drawings or sketches of the same character as King Exhibits, Nos. 1, 2 and 3?

Same objections.

A. Drawings similar to King's Exhibits, Nos. 1, 2 and 3.

X-Q. 37. Did you make any card-board model of the cams and arms and shafts, which would cause the edge W, of the plate E, of the Liddell patent to pass properly over the circumference of the cyclinder C of the Liddell patent?

Same objections.

A. Yes, sir, I made card-board models of the several parts, used to accomplish the result you mention.

X-Q. 38. What cam in the Liddell patent is represented by "King Exhibit, No. 5"?

A. The cam K'.

X-Q. 39. Why did you not make a model of the cam K when making your calculations resulting in Defendant's Drawing, No. 10?

A. I found that the cam shown in the tracing which is marked King Exhibit, No. 3, and corresponding to K, was enough to accomplish my result, without any pasteboard model of that cam.

X-Q. 40. When you completed your Exhibits Nos. 1, 2, 3, 4, 5 and 6, you submitted them and handed them to Mr. Walker, did you not?

A. Yes, sir.

X-Q. 41. Will you now please produce all of the sketches or drawings and card-board models, which you say you have made, which show that the parts delineated in the drawings of the Liddell patent, can be altered, so that the edge W, of the forming plate E, would pass properly along the circumference or periphery of the cylinder C?

Mr. Walker states to the Court that the drawings and models asked for are very numerous and complicated, and are not in possession of the witness, and have not been in his possession at any time during the last four or five months, but are in the possesion of Mr. Walker, defendant's counsel.

Mr. Walker states that he is not willing to furnish these drawings and models to the complainant's counsel; because they have no relevancy to the direct examination of this witness; and because they represent the result of a large amount of expert work which was done the Summer of 1902 at the expense of the defendant; and because if those drawings and models were to be now produced, and were to be explained in this deposition, this deposition

would be prolonged for a number of days, and perhaps for a week or more; and because the defendant's time for taking all its evidence in this case, has less than two weeks more to continue, and so much evidence remains to be taken, that it is not practicable to use any portion of the remaining time in explaining the elaborate and complicated expert work which this witness did, at the expense of the defendant, in the summer of 1902, after he had completed the expert work which was the only subject of the direct examination of the witness.

Complainant's counsel notes the surprising attitude of Mr. Walker in endeavoring to withhold certain facts from the Court. Complainant's counsel submits that this question is perfectly proper, and that the drawings and sketches and models made by this witness, which show whether the parts of the Liddell patent will operate so that the edge W, of the plate E, will properly pass over the periphery of the cylinder, to which the witness referred in answers to X-Qs. 36, 37, should be produced; since the direct-examination has been devoted to an attempt to impose upon the Court the idea that a person slavishly following the particular lines indicated in the Liddell drawings, could not make an operative and useful machine, while it is now apparent that this witness has been able, following the same drawings, to make an operative and useful machine.

Mr. Walker calls the attention of the Court to the fact that the drawings, sketches, and models, referred to in answers to X-Qs. 36 and 37, are not said in those answers nor in those questions to have been made by this witness to show whether the parts of the Liddell patent shown in Defendant's Drawing, No. 10, will operate so that the edge W, of the plate E, will properly pass over the periphery of the cylinder; and Mr. Walker calls the attention of the Court to the fact that it is not now apparent that this witness has been able, by following the Liddell drawings, to

make an operative and useful machine; or even that he succeeded in his attempts to calculate how the parts shown in the Liddell patent could be altered, so as to cause the edge W of the former plate E, of that patent to pass properly along the periphery of the cylinder C.

A. They are not now in my possession.

X.Q. 42. Did those sketches, drawings and cardboard models show that the parts of the Liddell drawings could be changed from what you say they are in Defendant's Drawing, No. 10, so that the edge W, of the plate E, should properly pass along the circumference of the cylinder C?

Mr. Walker objects to this question, as having no relevancy to the direct examination; and Mr. Walker instructs the witness that he has no right to answer the question, and that it is his duty to decline to answer the question, because it seeks to steal or otherwise secure from the defendant, the result of long continued expert work, for which the defendant has paid to the witness a considerable sum of money.

Complainant's counsel objects and protests to the instruction given the witness.

Complainant's counsel submits that the question is proper, since, by the direct examination, Mr. Walker has endeavored to mislead the Court, or to leave the impression in the mind of the Court that if a person slavishly follows the drawings of the Liddell patent he would not produce a useful machine, and that a great or radical alteration would have to be made in the parts shown in defendant's drawing, No. 10, in order that the Liddell machine should properly operate; while this cross examination is for the purpose of showing to the Court, that even if the parts of the Liddell patent are constructed as they are shown in defendant's drawing, No. 10, yet that it would require but slight alteration or change in those parts to make the machine operate perfectly, and that these models

and drawings and sketches, which Mr. Walker is now withholding from the Court, and instructing the witness not to disclose their contents, do show that these changes are but slight and colorable changes.

Mr. Walker states to the Court, that precisely what he has proved by this witness, is, that the mechanism shown in defendant's drawing No. 10, was exactly copied from the Liddell patent, and that that mechanism is useless for the purpose which is assigned to it in the Liddell patent; and that this witness has not undertaken to say in his deposition, what change, or how little change, or how much change would be required in that mechanism to make it work properly; and Mr. Walker submits to the Court, that if the complainant can prove anything on the subject of such changes, it will have an opportunity to do so, when taking its testimony in reply. And Mr. Walker adds that it is within his knowledge that the calculations which were made by the witness, and mentioned by him in reply to X-Q. 36, show that the parts of the Liddell patent of the Defendant's Drawing, No. 10, would require extensive and radical alteration, far beyond the reach of mere mechanical skill, in order to enable those parts to do the work assigned to them in the Liddell patent, if, indeed, that result could be accomplished even by extensive and radical changes; and that therefore, complainant's counsel is entirely in error in saying or implying that the production of the result of those calculations, and the proposed cross examination thereon, would show anything favorable to the Liddell patent.

Complainant's counsel objects to Mr. Walker testifying in this record, on the ground that he is not on the witness-stand, and subject to cross examination by complainant's counsel.

Complainant's counsel calls upon Mr. Walker to produce all the sketches, drawings and models which he says

he has in his possession, and to which the witness has referred in X-Qs. 36 and 37.

Mr. Walker positively declines to produce any or all of those sketches, drawings, and models.

A. I decline to answer the question, on the advice of defendant's counsel.

X-Q. 43. Have you any objection to answering the question which you have declined to answer; with the exception of the advice given you by Mr. Walker?

A. I make it a rule not to divulge my clients' work without their consent.

X-Q. 44. If Mr. Walker should not instruct you to decline to answer the question, then you have no other objection to so doing?

Mr. Walker objects to this question, because the witness has already testified that he makes it a rule not to divulge his clients' work without their consent; and because that answer plainly shows exactly the position of the witness upon the subject.

A. I should not answer, without instructions from Mr. Walker.

X-Q. 45. You have sufficient knowledge, have you not, to enable you to answer X-Q. 42?

A. Yes, sir.

X-Q. 46. How many drawings were there, and how many sketches were there, and how many models were there, which you handed to Mr. Walker, and whose contents you decline to state?

A. I don't recollect the exact number, but there were a great many of them.

X-Q. 47. How many; as near as you can remember?

Mr. Walker inquires of complainant's counsel whether he is willing to retire from the room, for the purpose of enabling the witness to count the drawings and the models in the absence of complainant's counsel, and then answer this numerical question?

Complainant's counsel replies in the affirmative, and now retires from the room.

A. I have counted the drawings and models, which Mr. Walker showed me, and find nine drawings and seventeen models.

Complainant's counsel now give notice that on Friday next, at the opening of the Court on said day in the United States Court room in the Post Office Bldg., in the City of New York, Borough of Manhattan, he will bring a motion for an order compelling the witness, within the jurisdiction of which Court, the witness now is, to answer X-Q. 42, and for such other and further relief as the Court shall see meet and right; and complainant's counsel further states that he suspends the cross examination of this witness until the Court has passed upon this motion.

Saturday, January 31, 1903, 11 o'clock A. M.

Present—Counsel as before and the witness Charles D. King.

The Honorable E. H. LACOMBE, United States Circuit Judge for the Second Judicial Circuit, holding a Term of the Circuit Court of the United States for the Southern District of New York, on Friday, January 23, 1903, having entered the following order, in respect of the foregoing noticed motion to compel the witness to answer X-Q. 42, namely:

"And now, after hearing counsel for both parties, upon complainant's motion to compel the witness King to answer X-Q. 42, it is

ORDERED, that the objection of defendant's counsel to said question be, and the same is hereby overruled, and that the witness answer the question.

(Signed) E. H. LACOMBE,
U. S. C. J."

And now the cross examination of this witness is resumed, as follows:

X-Q 43½. You have been served by me, have you not, with a copy of the foregoing order?

A. Yes, I have.

X-Q. 44½. Will you please, therefore, answer X-Q. 42, which is as follows:

"Did those sketches, drawings and cardboard models show that the parts of the Liddell drawings could be changed from what you say they are in Defendant's Drawing, No. 10, so that the edge W of the plate E, should properly pass along the circumference of the cylinder C?"

A. The sketches, drawings and cardboard models represent ten different attempts to plan such changes in the certain parts of the drawings of the Liddell patent, No. 558,969, as would cause the edge W to properly pass along the circumference of the cylinder C. After making nine failures; I made a tenth attempt, which succeeded theoretically, and I think the theory is correct.

X-Q. 45½. How long a time did it take you to make these ten different attempts?

A. As near as I recollect, about ten days.

X-Q. 46½. How long did it take you to make the single attempt which resulted in a theoretically successful outcome?

A. I think about one day. I am not positive about that.

X-Q. 47½. In making these ten attempts, did you follow the same kind of course of proceeding which you followed in making your calculations, resulting in the production of Defendant's Drawing, No. 10?

A. I used the same method of working out the positions of the different parts; but I changed dimensions of certain parts and positions of centers.

X-Q. 48. And in making these ten other attempts; did you make and use any cardboard drawings and tracings,

1114

and cardboard models of the arms F′, and E, and of the plate E, of the same character that you made and used as a basis for the production of Defendant's Drawing, No. 10?

A. I used cardboard models of the cam K′, the arms F′ and F, and the plate E. I used drawings and tracings, and I used some that I made for one attempt, in succeeding attempts, and made additional ones after making some changes in positions or portions, such as the attempt seemed to call for.

X-Q. 49. How many models of the cam K′ did you make?

Complainant's counsel, in order to shorten the examination as much as possible again calls upon Mr. Walker to produce the models, drawings and sketches to which the witness has referred as having been used by him in making these ten attempts, in order that the said parts may of themselves indicate their character and number.

Now that his Honor, Judge Lacombe, has entered the order which he did enter on Friday, January 23, 1903; Mr. Walker produces the nine drawings and seventeen models mentioned by the witness in reply to X-Q. 46 and X-Q. 47.

A. There were twelve different models of the cam K′, which I made and used.

X-Q. 50. Which of the models, drawings and sketches which have been now produced by Mr. Walker, and which are now before you, represent the tenth or theoretically successful attempt? Please mark these parts with your initials.

A. The tenth and theoretically successful attempt is represented by one drawing, which I now mark in ink, "C. D. K.," and by one circular piece of cardboard, on one side of which there is a pencilled representation of the theoretically successful cam K′, having written thereon "No. 10," and by two pieces of cardboard fastened together, so as to constitute one pasteboard model to represent the theoretically

successful arms F. and F'. On one side of this pasteboard model I have marked in ink the letters "C. D. K." in two places, one of those places being upon each of the two pieces of pasteboard which constitute that pasteboard model. On the other side of the larger of those two pieces of pasteboard, there appears the following, "No. 8, 9, 10." And I have also put "No. 10" under my initials in each of the four places where my initials appear.

X-Q. 51. In order that the pencilled lines upon the drawings and models may not be obscured by use; I will ask you to ink in all of the lines which appear in pencil thereon upon the sketches, drawings and models which Mr. Walker has produced, and which are now before you; and as this may take some little time, I am quite willing that you should do this and return these various parts, after they have been inked in by you, to the custody of the Notary Public without waiting to do so before answering the present question and closing the present deposition.

Mr. Walker states that in his judgment it will take several days of time of the witness to do all the work called for by X-Q. 51; and inasmuch as the drawings requested to be inked in, have been produced at the demand of complainant's counsel, against the objection of defendant's counsel, the latter thinks that the complainant's counsel ought to pay the witness for the professional work he is calling upon him to perform, and in the absence of a satisfactory arrangement between complainant's counsel and the witness in that behalf, Mr. Walker suggests to the witness that he is not under any obligation to undertake the work called for by X-Q. 51.

A. I will undertake the work, if I am paid therefor by whoever wants it done.

X-Q. 52. I will compensate at your usual rate of 60c. an hour, to ink in the various parts which you have marked

with your initials and with the symbols "No. 10." Will you do this?

A. I will.

Complainant's counsel requests the notary public to mark for identification the nine drawings and seventeen models which have been identified by the witness with the words for identification, "King's Models and Drawings, A, B, C, D, etc.," and they are accordingly so marked.

Cross Examination Closed.

Re-direct examination by Mr. Walker:

R-D-Q. 53. If you have made a drawing in ink, on tracing cloth, to represent your theoretically successful attempt, specified in your answer to X-Q. 44, please to produce that drawing?

A. I have made such a drawing, and now produce it.

R-D-Q. 54. Please to state how the parts are lettered in the drawing you now produce, as compared with Defendant's Drawing, No. 10?

A. The lettering is the same, except that the drawing I now produce shows a proper path for the edge W, of the former plate E, to be indicated by the letter Z, instead of the improper paths for the edge W, of the plate E, which in Defendant's Drawing, No. 10, are indicated by the letters X and Y.

Mr. Walker offers in evidence the drawing produced by the witness, in response to R-D-Q. 53, and requests that it be marked "Defendant's Drawing, No. 13," and it is accordingly so marked.

R-D-Q. 55. I observe on Defendant's Drawing, No. 10, and also on Defendant's Drawing, No. 13, that some of the parts are marked with a single-headed arrow; while others of those parts are marked with a double-headed arrow, respectively. Please to state the significance of the single-headed arrow, wherever it appears on either of those draw-

ings, and please to state the significance of the double-headed arrow wherever it appears on those drawings?

A. The single-headed arrow indicates that the part to which it is applied always revolves in the direction of the arrow. The double-headed arrow indicates that the part to which it is applied sometimes turns in one direction, and sometimes turns in the other direction, without ever making a complete revolution.

R-D-Q. 56. I call your attention to the fact that the gear M3 of Defendant's Drawing, No. 13, has a smaller diameter than the cylinder C; whereas, the pitch diameter of the gear M3 in Defendant's Drawing, No. 10, is identical with the diameter of the cylinder C of that drawing. Please to account for this difference?

A. That difference was due to the fact that the gears M2 and M3, in Defendant's Drawing, No. 10, were not correctly proportioned in the ratio of one to two, and in Defendant's Drawing, No. 13, they are proportioned in the ratio of one to two. The Defendant's Drawing, No. 10, agrees with figure 1, of the Liddell patent, in this respect. In making Defendant's Drawing, No. 13, I corrected the error, by making the number of teeth in the gear M2, exactly half the number of teeth in the gear M3, so that the cams, K, and K′, would revolve exactly twice, while the cylinder C, was revolving exactly once. In order to accomplish this result, I reduced the diameter of the gear M3, in making Defendant's Drawing, No. 13, so that that diameter would be exactly twice the diameter of the gear M2, instead of being somewhat more than twice that diameter, as in the case of figure 1, of the Liddell patent, and as in the case of Defendant's Drawing, No. 10.

R-D-Q. 57. I observe that the distance between the centers of the shaft L, and the shaft D, in Defendant's Drawing, No. 13, is slightly less than the difference between the centers of the same shafts in Defendant's Draw-

ing, No. 10. Please to state what occasioned this difference of distance?

A. It was caused by changing the proportions of some of the parts in Defendant's Drawing, No. 13, as compared with Defendant's Drawing, No. 10.

Re-cross examination by Mr. Betts:

R-X-Q. 58. In Defendant's Drawing, No. 13, the diameter of the cylinder C, is greater than the diameter of the cylinder C, in Defendant's Drawing, No. 10. Is it not?

A. Yes, sir.

R-X Q. 59. And all that would have to be done with Defendant's Drawing, No. 13, in order to show the gears M3, as co-incident with the periphery of the cylinder C, would be to reduce the diameter of that cylinder. Is that correct?

A. Yes.

R-X-Q. 60. At whose suggestion did you make Defendant's Drawing, No. 13?

A. Mr. Walker's.

R-X-Q. 61. Is the construction illustrated in Defendant's Drawing, No. 13, the only proportion and arrangement of parts, which will cause the edge W, of the plate E, to properly pass along the circumference of the cylinder C?

A. It's the only correct one I arrived at.

Re-cross examination closed.

Deposition closed.

CHARLES D. KING.

TUESDAY, January 13, 1903.

WILBUR M. STONE, a witness produced on behalf of the defendant, having been duly sworn, deposes as follows, the direct questions being put by Mr. Walker:

Q. 1. Please state your name; residence; and occupation; and where and when you were born?

A. Wilbur M. Stone; residence, Brooklyn, New York; occupation, mechanical engineer; born in 1862, in Danbury, Connecticut.

Q. 2. Please give an outline of your experience in mechanical engineering, in general; not including paper bag machinery?

A. My professional experience began in 1879, as an apprenticed machinist, in the extensive works of the Pratt & Whitney Company, located in Hartford, Connecticut. I continued my apprenticeship there nearly four years, from 1879 to 1882, inclusive. In 1883 I was designing and drawing tools and special machinery in the drawing room of the said Company. In 1884, I was a special student at the Stevens Institute of Technology in Hoboken, New Jersey. From 1885 to 1890, inclusive, I was employed in various engineering concerns in Hartford, Connecticut, as draftsman and designer on special and automatic machinery; and during a part of that time as assistant superintendent of the Pratt & Cady Company, manufacturers of valves and steam appliances. During about one year of the period between 1885 and 1890, I was engaged in the Pratt & Whitney Company factory, assisting Francis H. Richards in the designing and developing of automatic machinery for manufacturing paper envelopes at high speeds. In 1891 and 1892, I was employed as expert in charge of the steam specialty sales department of the Fairbanks Company of New York. In 1893 and 1894, I was superintendent of the works of the Pratt & Cady Company, in Hartford, Connecticut. Beginning in 1895, and continu-

ing to the present time, I have been practicing my profession as a mechanical engineer with Francis H. Richards, of Hartford, Connecticut, at 9-15 Murray street, New York. Mr. Richards is the most prolific inventor and patentee of automatic machines in the United States, and has long conducted a unique establishment for the inventing, developing and building of a large variety of complicated automatic machinery, and I have been his principal assistant as a mechanical engineer, ever since 1895.

Q. 3. When, if ever, was your attention first called to any automatic paper bag machinery?

A. In 1883, while employed as a draftsman and designer in the works of The Pratt & Whitney Company, the Leinbach, Wolle & Brunner paper bag machine was brought by Mr. Leinbach to the works of the said company, and I saw it at that time.

Q. 4. When, if ever, more recently, have you given special attention and consideration to paper bag machinery?

A. Beginning in the early part of November, 1902, I have spent nearly the whole of my time in a careful study of paper bag machine patents and paper bag machines. I have examined nearly two hundred paper bag machine patents, giving special attention to twenty-two patents for machines for the manufacture of self-opening square paper bags, and to four patents for manufacturing the satchel-bottom paper bags. I have spent several days at the works of the Continental Paper Bag Company, in Rumford Falls, Maine, where I examined a large number of paper bag machines in operation for making various kinds of paper bags. I gave particular attention to about sixty machines there for manufacturing self-opening square paper bags. One of the machines of the Continental Paper Bag Company, for manufacturing self-opening square paper bags, has been under my observation for some time in the model room of Albert H. Walker, on the 25th floor of the

Park Row Building, in New York. Resulting from the relevant knowledge acquired in the ways mentioned, I consider that I am fairly well acquainted with paper bag machinery.

Q. 5. Please to give a list of the twenty-six paper bag machine patents referred to in your last answer, and give that list in the order of the numbers of those patents respectively, and specify in that list, not only the numbers of the patents, but also their dates, and the names of the respective inventors, on whose invention they were granted:

A. No. 222,464, to Cross, of December 9, 1879.

No. 240,972, to Cross, of May 3, 1881.

No. 242,661, to Leinbach, Wolle & Brunner, of June 7, 1881.

No. 327,280, to Leinbach, Wolle & Brunner, of September 29, 1885.

No. 331,722, to Lorenz & Honiss, of December 1, 1885.

No. 333,647, to Lorenz & Honiss, of January 5, 1886.

No. 337,965, to Lorenz & Honiss, of March 16, 1886.

No. 337,966, to Lorenz & Honiss, of March 16, 1886.

No. 361,951, to Lorenz & Honiss, of April 26, 1887.

No. 387,573, to Appel, of August 7, 1888.

No. 407,794, to Stilwell, of July 30, 1889.

No. 410,841, to Lorenz & Claussen, of September 10, 1889.

No. 410,842, to Lorenz & Honiss, of September 10, 1889.

No. 411,544, to Claussen & Mortson, of September 24, 1889.

No. 417,346, to Stilwell, of December 17, 1889.

No. 439,703, to Taylor, of November 4, 1890.

No. 439,843, to Kelliher, of November 4, 1890.

No. 446,839, to Patterson, of February 17, 1891.

No. 510,410, to Crowell, of December 12, 1893.

No. 534,512, to Lorenz & Claussen, of February 19, 1895.

No. 540,556, to Murchie, of June 4, 1895.

No. 542,447, to Pettee, of July 9, 1895.

No. 543,571, to Crist, of July 30, 1895.

No. 558,969, to Liddell, of April 28, 1896.

No. 598,497, to Claussen, of February 8, 1898.

No. 635,090, to Claussen & Mortson, of October 17, 1899.

Q. 6. Which of these twenty-six patents are the four satchel-bottom paper bag machine patents?

A. Of these twenty-six patents, the four, which are for making satchel-bottom paper bags, are as follows:

No. 222,464, to Cross, of December 9, 1879.

No. 240,972, to Cross, of May 3, 1881.

No. 510,410, to Crowell, of December 12, 1893.

No. 543,571, to Crist, of July 30, 1895.

Q. 7. Please to specify the figures of the drawings of these four patents, which show the bottom of a satchel-bottom paper bag, if any of the patents contain such a figure?

A. The only figure I find in any of the four patents referred to, for making satchel-bottom paper bags, which shows a completed satchel-bottom paper bag, is Figure 13, of the Crist patent, No. 543,571, dated July 30, 1895, with the bottom completed therein. I also find a completely folded bottom of a satchel-bottom bag, in Figure 13, of the Cross patent, No. 240,972, of May 3, 1881.

Q. 8. Now please to go through with the twenty-two square bottom paper bag machine patents, and specify the figures therein, which show the completed bottom of a square bottom paper bag, if any of those patents contain such a figure?

A. I find the following Figures to contain drawings of the completed bottom of a self-opening square paper bag.

Figure 12, of patent, No. 242,661. Figure 1 and Figure

2, of patent, No. 327,280; also Figure 25, of that same patent. Figure 6, of patent, No. 331,722. Figure 8, of patent, No. 333,647. Figure 13, of patent, No. 361,951. Figure 8, of patent, No. 407,794. Figure 14, of patent, No. 439,843. Figure 19, of patent, No. 540,556. Other than these, I am not able to find any figures in these twenty-two patents, showing a completed bottom for a self-opening square paper bag.

Q. 9. Please to specify what figure of the Liddell patent, No. 558,969, shows the product which that patent purports to show how to make; and please to state the name of that product as it is known in the art of making self-opening square paper bags?

A. Figure 8, of the Liddell patent, No. 558,969, shows the completed product of the machine set forth in the Liddell patent; and this product is known in the art of paper-bag manufacture, as a portion of a tucked paper tube, one end of which has been opened out and folded down into a diamond form.

Q. 10. Now, please to go through with the drawings of the twenty-two square bottom paper bag machine patents, and specify the figures in those drawings which show the same diamond formed blank, substantially, which is shown in Figure 8, of the Liddell patent, No. 558,969?

A. I find the following figures showing a paper bag blank substantially the same as that of Figure 8, of the Liddell patent, No. 558,969.

Figure 7, of patent, No. 242,661. Figure 17, of patent, No. 327,280. Figures 2, and 3, of patent, No. 331,722. Figures 5, and 6, of patent, No. 333,647. Figures 4, and 5, of patent, No. 337,965. Figures 3, and 4, of patent, No. 337,966. Figure 10, of patent, No. 361,951. Figure 24, of patent, No. 387,573. Figure 4, of patent, No. 407,794. Figure 10, of patent, No. 410,841. Figure 15, of patent, No. 410,842. Figure 17, of patent, No. 411,544. Figure 6, Figure 10, and Figure 12, of patent, No. 439,703.

Figure 11, of patent, No. 439,843. Figure 10, of patent, No. 446,839. Figure 16, of Patent, No. 540,556. Figure 5, of patent, No. 542,447.

Q. 11. Now, please to critically examine the Liddell patent, No. 558,969, with a view to ascertain and state the mechanical merits, or otherwise, of the organization of mechanism which it presents for opening out one end of a tucked paper tube, like that shown in Figure 5 of the drawings of that patent, through the form shown in Figure 6, and the still more advanced form shown in Figure 7, down into the diamond form shown in Figure 8, of those drawings?

Complainant's counsel objects to the question as improper, if it is intended to elicit an answer from the witness contradictory of the testimony heretofore given by defendant's witness Claussen, who, on direct examination, has testified that the Liddell patent illustrated a good paper bag machine.

Mr. Walker states to the Court that Mr. Claussen did not so testify; and that the defendant is not bound by Mr. Claussen's opinion on that point, so far as that opinion was favorable to the Liddell patent, because it appears in his deposition that he was an unwilling witness for the defendant, and that he understood that his employer, the Union Bag & Paper Company, was pecuniarily interested on behalf of the complainant in this case.

Complainant's counsel calls the attention of the Court to the following numbered questions propounded to Mr. Claussen by Mr. Walker, relative to the showing of the Liddell patent, to wit: R-D-Qs. 399, 400, 401, 402, 403 and 404.

Complainant's counsel also points out that the character of the employment by which Mr. Claussen is engaged by the Union Bag & Paper Company, is set forth in Q. 14, as follows: By which the Union Company contracts "to take whatever you (Claussen) may produce in paper

bag machinery or paper bag machine inventions during the time of such contract." Complainant's counsel submits that this relation between the witness Claussen and the Union Company, does not show that the witness was an unwilling witness for the defendant, or that when Mr. Claussen was called by Mr. Walker as a witness, he could contradict or repudiate his testimony, which he himself elicited.

Adjourned until Wednesday, January 14, 1903, at 11 o'clock A. M.

Wednesday, January 14, 1903, 11 o'clock A. M. Met pursuant to adjournment; counsel present as before.

The witness now proceeds to answer Q. 11, as follows:

A. The Liddell Patent, No. 558,969, refers to that part of a paper bag machine for opening out the forward end of a tucked paper tube, and folding it down into a diamond form. The means set forth in said patent are briefly as follows:

In suitable bearing, is mounted the revolving cylinder C, on the periphery of which a portion of a tucked paper tube is held by the clamp C, entering the mouth of the said tube, and clamping the lower ply thereof to the face of the cylinder. Hovering over said cylinder, is a former plate E, having a hook E', for the upper ply of the mouth of the bag blank to pass over, as it is fed into the machine. Said former plate E, is intended to oscillate about its rear edge W, simultaneously with the movement of the cylinder, by means of a system of gearing and cams, and for the purpose of opening out the forward end of the tucked paper tube, and spreading the side folds thereof, and to crease the bag tube transversely. The former plate E, and each of the folding beds of the cylinder, are provided with forming fingers which enter the side tucks, respectively, of the bag blank, and define the location of

1126

the diamond folds of the bag bottom, simultaneously with the oscillation of the former plate about its rear edge. The continued movement of the former plate and the cylinder is intended to cause the upper ply of the bag tube to be folded back against the body thereof.

A machine built according to the drawings and specification of the Liddell patent, would be inefficient to properly produce a perfectly formed square bottom paper bag, from a tucked paper tube, in the following particulars:

First.—The cams K and K′ are not of the proper profile, nor the gears M′ and N of the proper ratio to impart, through the arm F, and the train of gears M′, M, M and N, a movement to the edge W, of the former plate E, coincident with the surface of the cylinder, during the rotative movement of said cylinder. This is clearly set forth in defendant's drawing, No. 10. In the said drawing is a careful plotting, on an enlarged scale, of the path of the edge W, of the former plate E, of the Liddell patent, No. 558,969, resulting from the profile of cams K, and K′, and the ratios of the arms F and F′, and the ratios of the gears M′ and N, as set forth in the drawings of said patent. The forward movement of the edge W is indicated by the full line X, and the return movement by the dotted line Y. It will be readily seen that the path indicated by the full line, penetrates the path of the periphery of the cylinder very deeply, and would obviously result in breaking, or so badly bending, parts of the mechanism as to render the machine inoperative.

Second.—There are no means provided for holding the roll in the inward end of the plunger k, against the periphery of the cam K. In other words, the plate E, when carried to its extreme outer position, as shown in dotted lines in Figure 1 of the Liddell patent, will remain there under the action of the spring F′, provided for returning the arm F to its first position. This action will tend to crush the

1127

top of the tucker plate E, arms h, h, and link H′, against the surface of the cylinder and break it.

Third.—There is no provision in the Liddell patent for the return of the arm H^2 to the position shown in Figure 2, after the completion of its forward stroke over the face of the cam I. After completing this stroke, said arm H^2 will drop off the end of said cam, near the character F in Figure 2. Said arm H^2 in starting on its return movement, will promptly collide with said rear end of cam I. Also, as said arm H^2 is then held by the spring J, against the stop J′, said arm is not free to fall back any farther, but will be stopped in its return movement, and the machine rendered inoperative. On page 2, lines 109 to 112, inclusive, it is stated in the Liddell patent, "As soon as the tube has been withdrawn from the plate E, the said plate is caused to return to its original position by the operation of the arm F, cams and gears." No adequate means for such return is shown. Also, in claim 2, of that patent, lines 55 to 59, inclusive, it is claimed, "Power devices for returning the forming plate to its original position." Such devices do not appear in the patent.

Fourth.—While new, and if of first-class construction, the gears on arm F, would probably operate to transmit motion from the cam K to the forming plate E; nevertheless constant use would soon develop so much back-lash, as to cause the action of the forming plate E, to be inaccurate. This defect was apparently appreciated by the inventor, who provided the eyes E^2 and horns A′, to lift the forming plate E from off the cylinder, a sufficient distance to allow room for the introduction of the bag blank under the forming plate. If the machine was properly designed, to perform its functions, the eyes E^2 and the horns A′, would be superfluous.

Fifth.—The hook E′ on the front edge of the forming plate E, is ineffectual to hold the upper ply of the bag

tube against the forming plate. It is not close enough to said plate E, nor does it extend toward the rear or forming edge thereof, a sufficient distance to be operative. In many instances, the bag blank would slip entirely off said hook, before reaching the position shown in figure 4, of the Liddell patent.

Sixth.—The forming fingers G, G, are shown vibrating in a plane substantially parallel to a tangent to the circumference of the cylinder, at their centers of oscillation. They are therefore never in close contact with the cylinder or the bag blank, and as their operative edges are without the angle of repose of the folds of the bag blank, said fingers are quite inefficient to keep said bag blank, in folding over them, from slipping toward the inward end of said fingers, and thereby crushing the bag blank. This would be particularly true, in using soft or thin paper. The same objection is valid in relation to the forming fingers on the forming plate E; which forming fingers H, H, vibrate in a plane parallel to the face of the forming plate, and are therefore inefficient to retain the bag blank from slipping down their working edges. By slightly inclining the axis of these several fingers, said fingers could be made to bite or clamp the bag blank to the cylinder, and forming plate, respectively; but even then the action of said fingers would probably push the bag blank more or less out of position, and thus produce irregular and ill-formed bags.

After very careful and detailed analysis of the drawings and specification of the Liddell patent, No. 558,969; in my judgment, a machine built in accordance therewith, even with the exercise of good mechanical skill and judgment, would be inefficient and impracticable for commercial use. It is obvious that the machine set forth in the patent is only partially thought out, and lacks important details.

Q. 12. Now please to state whether it would be possible

for any man to lay out the cams K and K′, with such profiles and to proportion the arms F, and F′, and the gears M′ and N, in such ways, as to cause the edge W, of the plate E, to travel forward, adjacent to the periphery of the cylinder C, in an arc of a circle concentric with that cylinder, when the gears were new and so perfect as to be entirely free from back-lash ; and if you think that result possible, then please to state what class of man would have to be called upon to produce that result?

Objected to as speculative.

A. It is within the scope of human ability to so proportion the cams, arms and gearing set forth in the question, as to cause the edge W of the forming plate to travel in a line concentric with the center of the cylinder C ; but to so lay out and proportion said parts, would require the skill of an expert draftsman, and it would take some considerable time to do.

Q. 13. Now, please to assume the future existence of a paper bag machine, to result from the work of some expert in examining the Liddell patent, No. 558,969, and in planning and building a machine free from all six of the faults of the Liddell patent, which you specified in reply to Q. 11, but which machine would be as near like the drawings of the Liddell patent as could be consistent with the absence of all those faults ; and then please to compare that hypothetical future Liddell machine with such a machine as would result from closely following the Lorenz & Honiss patent, No. 361,951 of April 26, 1887 ; and state the comparative merits of such a Liddell machine, with those parts of such a Lorenz & Honiss machine, as do the same work which the Liddell patent purports to show how to do? In making this comparison, you may, if you please, confine yourself to comparative merits, without such an analysis of the two patents, or the two machines, as would be involved in explaining their comparative structures?

Objected to as immaterial and irrelevant; since the merits of the Lorenz & Honiss machines are not involved in this case, because the validity and utility of the Lorenz & Honiss patent are not an issue herein.

A. In my judgment, all of the objections made to the construction and operation of the Liddell patent, could not be eliminated without additional invention; but most of them probably could. If the Liddell machine were constructed by a mechanical engineer skilled in the art of paper bag machinery, the machine so produced, would be inferior to the machine of the Lorenz & Honiss patent, No. 361,951, in efficiency and speed. By efficiency I mean to indicate its ability to produce merchantable paper bags.

Q. 14. Please to state into what grand divisions, if any, a paper bag machine is naturally divisible, which is complete enough to draw into itself at one end, a continuous sheet of flat paper, and to deliver at the other end, a succession of self-opening square paper bags, which are sometimes called square-bottom paper bags, and of which Lorenz Exhibits, Nos. 1, 2, and 3, are examples.

A. Such a machine would comprise three grand divisions. The first grand division would include mechanism for forming a continuous pasted paper tube, having an inwardly folded tuck at each side. The second grand division would include mechanism for opening out one end of such a tucked paper tube, and folding it down into a form known in the art as the diamond form. The third grand division of such a machine would include mechanism for folding and pasting the diamond form into the complete square bottom of the bag.

Q. 15. Please to go through with the twenty-two self-opening square paper bag machine patents, which you specified in your answers to Qs. 5 and 6, and state the numbers, names, and dates of those of them which show all three of those grand divisions, of such a paper bag machine?

A. No. 242,661, to Leinbach, Wolle & Brunner, of June 7, 1881.

No. 327,280, to Leinbach, Wolle & Brunner, of September, 29, 1885.

No. 331,722, to Lorenz & Honiss, of December, 1, 1885.

No. 407,794, to Stilwell, of July 30, 1889.

No. 417,346, to Stilwell, of December 17, 1889.

No. 446,839, to Patterson, of February 17, 1891.

No. 598,497, to Claussen, of February 8, 1898.

Q. 16. Please to state the numbers, names and dates of those of the twenty-two square bottom paper bag machine patents, which show the second and the third of those three grand divisions, without showing the first grand division?

A. No. 353,647, to Lorenz & Honiss, of January 5, 1886.

No. 361,951, to Lorenz & Honiss, of April 26, 1887.

No. 387,573, to Appel, of August 7, 1888.

No. 439,703, to Taylor, of November 4, 1890.

No. 439,843, to Kelliher, of November, 4, 1890.

No. 540,556, to Murchie, of June 4, 1895.

No. 542,447, to Pettee, of July 9, 1895.

No. 635,090, to Claussen & Mortson, of October 17, 1899.

Q. 17. Please to state the numbers, names and dates of those of the twenty-two square-bottom paper bag machine patents, which show the second of those three grand-divisions, without showing the first or the third grand division?

A. No. 337,965, to Lorenz & Honiss, of March 16, 1886.

No. 337,966, to Lorenz & Honiss, of March 16, 1886.

No. 410,841, to Lorenz & Claussen, of September 10, 1889.

No. 410,842, to Lorenz & Honiss, of September 10, 1889.

No. 411,544, to Claussen & Mortson, of September 24, 1889.

No. 534,512, to Lorenz & Claussen, of February 19, 1895.

No. 558,969, to Liddell, of April 28, 1896.

Q. 18. Now please to go through with all of the twenty-two square-bottom paper bag machine patents, in their order, and compare those portions of each of them which constitute the second grand division of a paper bag machine, with the machine of the Liddell patent, No. 558,969 (which, however, is one of the twenty-two), and assume that all the objections to the Liddell patent, which you specified in answer to Q. 11, to be somehow removed and eliminated; and state as you go along, the comparative merits of each of the other twenty-one patents, and the Liddell machine with its special faults thus removed. In making these twenty-one comparisons, please do not take time at present, to state any analysis of the twenty-one machines, being compared with the Liddell machine; but simply state whether the mechanism of each of those twenty-one patents for opening out one end of a tucked paper tube and folding it down into a diamond form, is, in your judgment, superior or is inferior, to such a Liddell machine as would result from the work of some expert, in making a Liddell machine without any of the six faults specified in your answer to Q. 11?

Complainant's counsel objects to the question as immaterial and irrelevant. First, because the merits of the other twenty-one patents are not involved in this suit, because the validity and utility thereof are not here in controversy. Second, because the law does not require that a patent shall disclose the best possible machine, or a machine which is superior to all other machines, but only that the invention disclosed in the patent whose validity is questioned, shall be an operative machine.

Mr. Walker states to the Court that this question is

relevant to the question whether the defendant's machine infringes the Liddell patent, though not relevant to the question whether the Liddell patent is void.

A. The machines set forth in the Leinbach, Wolle & Brunner patents, No. 242,661 and No. 327,280, are inferior to the hypothetical Liddell machine described in the question. The Lorenz & Honiss machines of patents No. 331,722 and No. 333,647 compare favorably with the said Liddell machine, but would in some respects be inferior thereto. No. 337,965, to Lorenz & Honiss, shows a machine that would have some advantages over the said Liddell machine. The machines of Lorenz & Honiss, shown in patents No. 337,966 and No. 361,951, would be superior to the said Liddell machine, particularly the second patent of this pair. No. 387,573, to Appel, shows a machine that is not equal to the said Liddell machine. No. 407,794, to Stilwell, shows a machine much superior to the said Liddell machine. The Lorenz & Claussen machine No. 410,841 is superior to the said Liddell machine. No. 410,842, to Lorenz & Honiss, shows a machine the main features of which are superior to corresponding features in the said Liddell patent. The Claussen & Mortson machine of No. 411,544 is a better machine than the said Liddell machine. No. 417,346, to Stilwell, is superior to the said Liddell machine. The Taylor machine No. 439,703 is of about equal value with the said Liddell machine. The Kelliher machine No. 439,843 has some points of superiority to the said Liddell. No. 446,839, to Patterson, shows a machine that is not equal to the said Liddell machine. No. 534,512, to Lorenz & Claussen, shows a machine superior to the said Liddell machine. The Murchie machine of patent No. 540,556 shows a machine superior to the said Liddell machine. No. 542,447, to Pettee, shows a machine that is about the equal of the said Liddell machine. No. 598,497, to Claussen, shows a machine that is superior to the said Liddell machine. The special features of the Claussen &

Mortson machine, as set forth in patent No. 635,090, are superior to the means provided to accomplish the same work of the said Liddell machine.

Q. 19. You say in your answer to Q. 4, that one of the machines of the Continental Paper Bag Company, for manufacturing self-opening square paper bags, has been under your observation for some time, in the model-room of Albert H. Walker, on the 25th floor of the Park Row Building, in New York. Now, to distinguish that particular machine from other self-opening square paper bag machines of the Continental Paper Bag Company, it has been designated in the depositions of Mr. Claussen and Mr. Lorenz, as the machine in Mr. Walker's model-room, and as the model-room machine; and I suggest that in speaking of that machine, we uniformly designate it as "The Walker Model-Room Machine."

Please now to designate the patent or patents, if any, to which the Walker Model-Room Machine generally conforms, without at this time, attending to any detailed difference between that machine and such patent or patents?

A. The Walker Model-Room Machine conforms in general to patent No. 598,497, to Claussen, of February 8, 1898; and to 635,090, to Claussen & Mortson, of October 17, 1899.

Q. 20. Now, it appears in the deposition of Mr. Lorenz, that about one hundred paper bag machines have been used in this country, for many years, the second grand division of each of which conformed to that division of the Lorenz & Honiss patent No. 361,951, which opens out one end of a tucked paper tube, and folds it down into a diamond form. And it also appears in his deposition, that a very large number of paper bag machines have been used in this country for many years, the second grand division of each of which conformed substantially to the Stilwell patent No. 407,794, in respect of the same second grand division; and indeed in all respects, except that it appears

in Mr. Lorenz's deposition that those Stilwell machines also included improvements shown in the Stilwell patent No. 417,346. Now, I ask you to state what view you entertain of the comparative merits of such Lorenz & Honiss machines, and such Stillwell machines, and the Walker Model-Room Machine. In answering this question please to take into account the comparative complexity and cost of the three kinds of machines, which I am asking you to compare, and also take into account their comparative speeds and the excellence of their respective products, and also any other element which occurs to you as entering into their comparative merits?

Complainant's counsel objects to the question as immaterial and irrelevant, since neither the merit of the Lorenz & Honiss machine of patent No. 361,951, nor the merit of the machine of the Stilwell patent, No. 407,794, nor the comparative merit of "The Walker Model-Room Machine" with the two other machines, is of issue in this case. The question is further objected to as incompetent, in that it does not appear in the record that the witness has any knowledge as to the cost of any one of the three machines mentioned in the question, or that the witness has ever seen the Stilwell machine in practical operation, nor has it been shown that the witness has any knowledge as to the speed of production of any one of the three machines in commercial operation.

Mr. Walker states to the Court that the question calls for a theoretic view on the matters of fact involved in the question; and that that theoretic view can presumably be sufficiently accurate for all practical purposes, because the witness appears to be fully qualified to judge from drawings and descriptions in patents, of the comparative merits of automatic paper bag machines, shown in those patents for doing the same work.

A. The machine of the Lorenz & Honiss patent, No. 361,951, compares favorably with the Walker Model-

Room Machine, as to number and complexity of parts; but the Stilwell machine as set forth in patent, No. 407,794, and No. 417,346, has a much greater number of parts than either of the other two machines; but I believe these parts are not of greater complexity. I do believe, however, that the timing of the parts of the Stillwell machines would be of greater complexity and more difficult, than the timing of the parts of either of the other two machines. The cost of building a machine like the machine set forth in the Lorenz & Honiss patent, would, in my judgment, be about the same as the cost of a machine like the Walker Model Room Machine; but that the cost of the Stilwell machine would be at least fifty per cent. greater than either, and quite likely still more expensive. The Lorenz and Honiss machine could not be run at as high a speed as the Stilwell machine, on account of the greater number of reciprocating parts contained in the first-mentioned machine. Mechanism that can be kept traveling in one direction, can be run at greater speed than mechanism that has to be stopped and reversed in its operation. Also, mechanisms that run continuously in one direction would produce more uniform results. The Walker Model Room Machine has fewer reciprocating and vibratory parts than either the Stilwell or the Lorenz & Honiss machines; and I believe, with the same expenditure of care and supervision could be run continuously at higher speed, and that on account of the nature of its elements, would produce more uniform product than either of the beforementioned machines. In the Lorenz & Honiss machine, the paper bag blank, in some instances, is moved with a jerky motion, which tends to imperfect work; and in the Stilwell machine the direction of travel of the paper bag blank is at several stages materially changed, which change is conducive to irregularity of product.

Q. 21. Which of the nineteen self-opening square paper bag machine patents, of earlier date than the Liddell pat-

ent, 558,969, presents the poorest plan for such a machine.

Objected to as immaterial and irrelevant to any issue in this case.

A. It is difficult to select any one patent from the nineteen specified, as being the poorest. There are several of low merit, compared with the rest, as the Leinbach, Wolle & Brunner, machines of 242,661, and 327,280; the Appel machine of No. 387,573; and the Patterson of No. 446,839. I believe the product of the first two named machines would be superior to that of the last two; but that either of the last two would be superior mechanically, and in lasting qualities, to the first two.

Q. 22. Now, please to compare the several manipulations which take place according to Figures 5, 6 and 7, of the Liddell patent, No. 558,969, in the operation of opening out one end of a tucked paper tube like that shown in Figure 5 of that patent through the form shown in Figure 6, and through the more advanced form shown in Figure 7, into the diamond form shown in Figure 8; with the several manipulations which take place upon the bag tube in doing the same work according to the Lorenz & Honiss patent, No. 337,966, of March 16, 1886; and explain the result of that comparison, by any drawing which may be available for that purpose, and also in words?

A. I produce herewith a drawing marked "Defendant's Drawing, No. 5," the first column of which is headed "L. & H. 337,966," and the second column of which is headed "Liddell 558,969." In the first column of said Defen lant's Drawing, No. 5, is a series of views from the Lorenz & Honiss patent, No. 337,966, and while not all of the views there shown, are to be found in said patent, one of them is, it being a perspective view corresponding to Figure 3, in that patent. This view is the last one in the first column of said Defendant's Drawing No. 5.

This last figure corresponds in all respects to figure 3, of said patent, except that the figure in the defendant's

drawing No. 5 has the tucker plate added thereto, in dotted lines; and while the other figures in the first column of the defendant's drawing, No. 5, are not to be found in said patent, they are legitimately deducible therefrom. The figures in the second column of defendant's drawing, No. 5, conform in all respects to the figures, bearing the same numbers, respectively, in the Liddell patent, No. 558,969, and are described in said patent as "perspective views illustrating the several manipulations which take place upon the bag tube, in its formation under the action of the nipper and forming fingers." If now, figure 5 in the second column of defendant's drawing, No. 5, be compared with the first figure in the first column thereof, it will be seen that in both cases, that both upper and lower side fingers have entered the side tucks of the paper bag blank, and that the lower front clips pertaining to the folding beds, have gripped the lower ply of the mouth of the bag tube; and that the upper plys of the mouth of the bag tubes, respectively, are over the hooks of the folding plates, in each figure respectively. In the second figure of both columns, the presser-plates have moved to positions about vertical to the bag tube, respectively; and in each instance the folding bed, side fingers, and front finger have remained in their first positions, respectively, in reference to their respective folding beds; and the side folding fingers and front fingers pertaining to the folding plates, respectively, are traveling with their respective folding plates, and have retained their same relative positions thereto, as in the first mentioned view. In the third pair of figures, the folding plates have gone about three-quarters of their respective strokes, and their corresponding fingers have maintained the same relative positions in reference to their own folding beds, and folding plates respectively.

In the last two figures, those at the bottom of the two columns respectively, the folding plates have gone their full strokes respectively; and all the corresponding parts in both figures are seen to be in their same relative positions.

It thus appears that the several manipulations of tbe bag tube in the formation of the diamond, as set forth in figures 5, 6, 7 and 8, of the Liddell patent, are identical with the several manipulations of the bag tube in the formation of the diamond, in the Lorenz & Honiss patent, No. 337,966.

Mr. Walker offers in evidence the drawing produced by the witness, and requests that it be marked "Defendant's Drawing No. 5, Charles E. Smith, Notary Public," and it is accordingly so marked.

Objected to as immaterial, irrelevant and incompetent.

Q. 23. Please to look at a drawing I now show you, marked "Defendant's Drawing No. 6," and explain fully its purport?

A. In defendant's drawing No. 6, the first column of figures contains diagramatic views corresponding in every way to the figures 6 to 9 inclusive, of the Lorenz & Claussen patent, No. 534,512; except that in the defendant's drawing No. 6, the point of view in the figures is taken from the right hand side of the machine, while in the Lorenz & Claussen patent, the point of view is taken from the left-hand side of the machine. In every other respect, the two series of figures correspond. These figures show the second grand division of a machine for making self-opening square paper bags; that is, mechanism for opening out the forward end of a tucked paper tube and folding it down into a diamond form. The means provided in that machine to perform these functions consists in a cylinder 11, a roll 12, side grippers 19 and 20, pivotally mounted on the cylinder, a front gripper 29, a guide-plate 40, roll 37, and a presser-roll 42; also the folding-blades 71, and 72, co-acting with the folding plate 50. The actuating mechanism of these parts is omitted in the defendant's drawing, No. 6, for convenience; but such mechanism is fully set forth in the Lorenz & Claussen

patent, No. 534,512. The successive steps in the opening out of a tucked paper tube, and folding it down into a diamond form by this machine, as shown in the figures of the first column of defendant's drawing, No. 6, are as follows :

A suitable length of tucked tubing is fed between the cylinder 11 and the roll 12, and as the leading end passes the line of contact of the cylinder and roll, the front gripper 29 closes upon the center of the lower ply, and as the tube advances, separates it from the upper ply, which passes forward over the roll 37, and under the presser 42, slightly elevated for that purpose. The side grippers 19 and 20 are then turned inwardly to grip with the cylinder, the edges of the lower plys of the bag tube at the points where the corresponding corners of the bottom of the bag are subsequently to be made. As the tube advances, the folding-plate 50, moves downward, bringing its lower edge in contact with the blank, at substantially the line on which the primary transverse fold is to be made. At the same time, the blades 71 and 72 enter the side tucks. The front gripper 29 releases its hold on the lower ply of the tube mouth, after bringing said lower ply by under the guide 40, as shown in figure 2. The presser 42 is now allowed to drop upon the lower ply, to keep the pasted longitudinal seam from spreading or opening during the operation of folding. Passing to the position shown in figure 3, the blades 71 and 72 are caused to oscillate on their bearings, to the extent therein shown, which operates to stretch out the side tucks of the tube between those four points upon the edges of the tube, which are engaged by the edges of the side grippers and the blades. Continuing the operation from the position shown in figure 3, to that shown in figure 4, the folder plate moves down with the tube, and the blades continue to turn; which action in conjunction with that of the roll 37, flattens the blank into substantially the form shown in figure 4. At a point intermediate to the position shown in

figures 3 and 4, the side grippers 19 and 20 are withdrawn. At the position shown in Figure 4, the blades 71 and 72 are withdrawn, and the diamond formed blank is delivered to any suitable mechanism for pasting and completing the bag.

If now, the blades 71 and 72 and the roller 37, and the presser 42, of the Lorenz & Claussen patent, No. 534,512, be removed, and the oscillating tucker plate 67 with its side grippers 82 and 83, of the Lorenz & Honiss patent, No. 337,966, and the front finger K3 of the Cross patent, 222,464, be substituted therefor; it will have the modification set forth in the middle column of defendant's drawing, No. 6, and whose mode of operation would be as follows:

A suitable length of tucked paper tubing having been fed between the cylinder 11, and the roll 12, and as the front end thereof passes the line of contact of the cylinder and the roll, the front gripper 29, will close upon the mouth of the lower ply of the tube, and as the tube advances, separate said lower ply from the upper ply thereof, which latter passes forward into space. The side grippers 19 and 20, are then turned inwardly so as to grip to the cylinder the edges of the lower plys at the points, approximately, where the corresponding corners of the bag bottom are subsequently to be made. At the same time that these movements are being made, the folder plate 50 descends slightly, and the presser-plate 67 turns upon its pivot at the lower end of said folding plate 50, down a sufficient distance to allow the upper ply of the tucked paper tube to pass over the front fingers K3, as shown in figure 2, of the middle column of said defendant's drawing, No. 6. The plate 50 continues its downward movement with the bag blank, until its bottom edge reaches the position shown in figure 2, of said defendant's drawing No. 6, where the primary transverse fold of the bag blank is defined. Then the side grippers

82 and 83, close, gripping the two sides respectively to the upper ply of the bag blank, at points corresponding to the points where the corners of the bag bottom are subsequently to be folded. The forward end of the lower ply of the bag blank has at this time just been liberated from the front gripper 29, and has passed behind the guide plate 40, as shown in figure 2, of the defendant's drawings No. 6. Passing now to figure 3, the folding plate continues its downward movement, and the presser-plate 67 continues to turn backward toward said folding plate. Passing to the position shown in figure 4, the folding plate 50 continues its downward movement, and the presser-plate 67 continues to turn backward to the end of its stroke against said folding plate, thereby folding the opened end of the tucked paper tube down into a diamond form.

Adjourned until Thursday, January 15, 1903, 11 o'clock A. M.

Thursday, January 15, 1903, 11 o'clock A. M. Met pursuant to adjournment; counsel present as before.

The witness continues in answering Q. 23, as follows:

In the third column of defendant's drawing, No. 6, is shown a series of figures from the Liddell patent, No. 558, 969, which while all of said figures are not to be found in said patent, one is, and the others are legitimately deducible therefrom. The only modification in the figures of said series, in the third column of defendant's drawing, No. 6, from the Liddell patent, is the substitution for the inefficient finger E', of the better designed and efficient front finger K3, from the Cross patent, No. 222, 464. Also the means for operating the mechanism in the proper time, is omitted. This series of figures shows the successive positions of the parts of the Liddell machine, during the formation of the diamond form, and the figures correspond

in their relative positions, to the figures having like numbers respectively, in the other columns of defendant's drawing, No. 6.

The modified Lorenz & Claussen machine 534,512, shown in the figures of the middle column of the said defendant's drawing, No. 6, (the construction and operation of which has been described,) would show a machine conforming in every respect to the language of claim 1, claim 2, and claim 7, of the Liddell patent; it having in a paper bag machine, the "combination of a rotating cylinder provided with one or more pairs of side-folding fingers, adapted to be moved toward and from each other, a forming plate also provided with side forming fingers, adapted to be moved toward and from each other, means for operating said fingers at definite times during the formative action upon the bag tube, and operating means for the forming plate adapted to cause the said plate to oscillate about its rear edge upon the surface of the cylinder, during the rotary movement of said cylinder, the whole operating for the purpose of opening and forming the bottom of the bag tube, and means to move the bag tube with the cylinder." Also having the "combination of a rotating cylinder provided with one or more pairs of side folding fingers adapted to be moved toward or from each other, a forming plate also provided with side forming fingers adapted to be moved toward or from each other, means for operating said fingers at definite times during the formative action upon the bag tube, operating means for the forming plate, adapted to cause the said plate to oscillate about its rear edge upon the surface of the cylinder, during the rotary movent of said cylinder, for the purpose of opening and forming the bottom of the bag tube, a finger moving with the forming plate for receiving the upper sheet of the tube, and lifting it during the formative action, power devices for returning the forming plate to its original position, to receive a new bag tube,

and means to move the bag tube with the cylinder." And also having the "combination of the rotating cylinder for the bag tube provided with one or more pairs of folding fingers adapted to be moved toward or from each other, a forming plate also provided with forming fingers adapted to be moved toward or from each other, means for operating said fingers at definite times during the formative action upon the bag tube, operating means for the forming plate adapted to cause the said plate to oscillate about its rear edge upon the surface of the cylinder, during the rotary movement of said cylinder for the purpose of opening and forming the bottom of the bag tube, and connecting mechanism for timing the movements of the rotating cylinder and the forming plate." All these claims would cover the machine shown in the middle column of defendant's drawing, No. 6, as well and as fully as that shown in the third column thereof.

Furthermore, it was within the reach of mechanical engineering skill in paper bag machinery, to thus modify the Lorenz & Claussen machine of patent 534,512, from the Lorenz & Honiss machine of patent No. 337,966, any time after the issue of that patent on February 19, 1895, to Lorenz & Claussen. Furthermore, it would not involve invention to substitute the front finger K3 from the Cross patent, No. 222,464, for the movable front finger of the Lorenz & Honiss patent, No. 337,966, as is done in the modified Lorenz & Claussen machine, No. 534,512, shown in the middle column of defendant's drawing, No. 6.

Mr. Walker offers in evidence the drawing explained by the witness in the last answer, and requests that it be marked "Defendant's Drawing No. 6, Charles E. Smith, Notary Public," and it is accordingly so marked.

Objected to as immaterial, incompetent and irrelevant.

Q. 24. Please to look at the drawing I now show you,

which is marked "Defendant's Drawing No. 7," and please to explain the purport of that drawing?

A. In defendant's drawing No. 7 the first column contains a series of four figures corresponding in all respects to the diagramatic views, figures 7 to 10, inclusive, respectively of the Crist patent No. 543,571; except that the figures in the first column of defendant's drawing No. 7 show the parts more in detail than the said diagramatic views of the Crist patent. The figures in the first column of defendant's drawing No. 7 show successive positions of the former plate and its actuating mechanism in the operation of opening out the forward end of a paper tube, and folding it down into a diamond-formed paper bag blank. The bag blank in this case is a flat paper tube and not a tucked paper tube. The said operation is shown at its commencement in figure 1 through successive stages in figures 2 and 3 to its completion in figure 4. If we now modify the machine of the Crist patent, No. 543,571, by the substitution for each of the former plates, T, T, the presser plate 67, with its side fingers 82 and 83 respectively, of the Lorenz & Honiss patent, No. 337,966, and the front finger K3 of the Cross patent, No. 222,464, and further modify the said Crist patent by adding to the cylinder, the side fingers 61, and 62, and front clip 63 of the said Lorenz & Honiss patent, No. 337,966, we will have a machine such as is set forth in the figures of the middle column of defendant's drawing, No. 7. Although the means for operating, in the proper time, the side fingers 61 and 62, and front clip 63, of the cylinder, respectively, and the side fingers 82 and 83, of the presser plate, are not shown in defendant's drawing, No. 7, they are fully set forth in the said Lorenz & Honiss patent, No. 337,966, and could be easily applied to this machine by a mechanical engineer skilled in the art. When so applied, the machine shown in the middle column of defendant's drawing, No. 7, will be adapted not only to

1146

perform the operation of the Crist machine, in opening the forward end of a flat paper tube, and folding it down into a diamond form; but would be fully adapted, with the aid of the two sets of side fingers, for opening the forward end of a tucked paper tube, and folding it down into a diamond form, for a self-opening square paper bag. These figures in the middle column of the defendant's drawing, No. 7, show successive positions of the parts of the modified Crist scheme, during the formation of the diamond, and correspond in relative positions with figures bearing like numbers respectively, in the first column of said defendant's drawing, No. 7. The Crist machine, thus modified, conforms in all respects to the language of claim 1, claim 2, and claim 7, of the Liddell patent, No. 558,969, it having in a paper bag machine:

"The combination of a rotating cylinder provided with one or more pairs of side folding fingers adapted to be moved toward or from each other, a forming plate also provided with side forming fingers adapted to be moved toward or from each other, means for operating said fingers at definite times during the formative action upon the bag tube, operating means for the forming plate adapted to cause the said plate to oscillate about its rear edge upon the surface of the cylinder during the rotary movement of said cylinder, the whole operating for the purpose of opening and forming the bottom of the bag tube, and means to move the bag tube with the cylinder."

It also having: "The combination of a rotating cylinder provided with one or more pairs of side folding fingers adapted to be moved toward or from each other, a forming plate also provided with side forming fingers adapted to be moved toward or from each other, means for operating said fingers at definite times during the formative action upon the bag tube, operating means for the forming plate adapted to cause the said plate to oscillate about its rear edge, upon the surface of the cylinder, during the rotary

movement of said cylinder, for the purpose of opening and forming the bottom of the bag tube, a finger moving with the forming plate, for receiving the upper sheet of the tube and lifting it during the formative action, power devices for returning the forming plate to its original position, to receive a new bag tube and means to move the bag tube with the cylinder."

And it also having: "The combination of the rotating cylinder for the bag tube provided with one or more pairs of folding fingers adapted to be moved toward or from each other, a forming plate also provided with forming fingers adapted to be moved toward or from each other, means for operating said fingers at definite times during the formative action upon the bag tube, operating means for the forming plate adapted to cause the said plate to oscillate about its rear edge upon the surface of the cylinder during the rotary movement of said cylinder for the purpose of opening and forming the bottom of the bag tube, and connecting mechanism for timing the movements of the rotating cylinder and the forming plate."

And which machine would also have a tucker plate, mounted upon a supporting axis remote from the creasing edge of said tucker plate, and would have provision for relative movement, away from and toward each other of the supporting axis of the tucker plate, and the folding bed upon which the edge axis of said plate would operate; which two characteristics, though not mentioned in claims 1, 2 or 7, of the Liddell patent, are found in the drawings of that patent. These features are fully set forth in the last column of defendant's drawing No. 7, and which figures are from the Liddell patent, No. 558,969; and while they are not all found in the drawings of said patent, one of them is, and the others are legitimately deducible therefrom. Furthermore, said patent would be more clearly set forth, if it included figures like all of those in the last column of said defendant's drawing, No. 7. The only modi-

fication in said figures in the last column of defendant's drawing, No. 7, from the drawings of the Liddell patent, is the substitution of the efficient front finger K3, of the Cross patent, No. 222,464, for the inefficient and inoperative front finger E′ of the Liddell patent. These figures in the last column of defendant's drawing, No. 7, show successive positions of the parts of the Liddell machine, in the formation of the diamond, and correspond to relative positions with the figures having like numbers respectively, in the other columns of said drawings.

The modified Crist machine set forth in the middle column of defendant's drawing, No. 7, would, in my judgment, be a practical machine for commercial use, and could be run at fairly high speed. At high speed, the impact of the fork, t, against the pin m2, and the impact of the arm, h2, against the pin t2, as shown in figure 4 of the middle column of defendant's drawing, No. 7, would be somewhat severe and noisy; but both of said pins could be spring-supported, and the machine made to work smoothly, and without pound. This modified Crist machine has the advantage of fewness and simplicity of parts, and has no series of co-acting parts in which injurious back-lash could accumulate, as in the Liddell machine. I think, on the whole, that a machine like the modified Crist would be less liable to derangement and deterioration, and would run with less clatter, and produce better bags, at higher speeds, than the Liddell machine.

Mr. Walker offers in evidence the drawing explained by the witness in answer to Q. 24, and requests that it be marked "Defendant's Drawing, No. 7, Charles E. Smith, Notary Public," and it is accordingly so marked.

Objected to as immaterial, incompetent and irrelevant.

Q. 25. Please now to look at a drawing I now show you which is marked "Defendant's Drawing No. 1, John A. Shields, Examiner," and please to state the purport of that drawing, as you understand the same?

A. Defendant's Drawing, No. 1, is like figure 4, of the Liddell patent, No. 558,969, with the following exceptions:

First.—It shows the folding plate E, with its axis of support and its axis of work at the edge W; instead of its axis of work at that edge, and its axis of support at the other edge thereof. Second.—The axis of support of the said forming plate, is a shaft trunnioned in a lug, X, upon each side of the surface of the cylinder. Third.—The Defendant's Drawing No. 1, omits the eyes E2, the projections A', and the supports A, shown in Figure 4, of the Liddell patent. Fourth.—The hook E', is much closer to the forming plate, and is much longer than the hook E' of the Liddell patent. Fifth.—The front nipper c, enters the mouth of the bag blank, instead of pressing down upon a tongue projecting from the forward end of the bag blank. Sixth.—It shows a complete cylinder, instead of a segment of a cylinder, and shows the main shaft on which that cylindar rotates. Seventh.—There is a space of about one-sixteenth of an inch between the edge W, of the forming plate, and the surface of the cylinder, instead of nothing between that edge and the surface of that cylinder, except the paper bag blank. A structure made in accordance with Defendant's Drawing No. 1, would have the following mode of operation.

Some mechanism, not shown, having thrust a paper bag blank through the narrow space between the edge W, and the periphery of the cylinder far enough; the nipper c, will grip the lower thickness of the forward end of the blank against the cylinder, and the upper thicknes of the forward end of the blank will pass over the hook E'. When the bag blank is thus in position, the side forming fingers G and H, will enter the tucks in the sides of the blank. Thereupon, the axis X of the forming plate E, will be turned, by means of a proper cam, and cause the form-

ing plate to rise away from the surface of the cylinder, as far as the position shown in Defendant's Drawing, No. 1, and continuing ninety degrees or more backward on the axis X. While the forming plate was thus turning backward on the axis X, that axis would move forward with the periphery of the cylinder. As soon as the turning backward of the forming plate E, would go far enough to open the forward end of the tucked paper tube, and fold it into a diamond form, the side forming fingers G and H, would be withdrawn by the proper cams, from the folds of the blank, and the front nipper c, would release the forward end of the blank, and the blank would be transferred to other mechanism, as indicated in the Liddell patent, and folded and pasted into a paper bag. The forming plate E, the fingers G and H, the front nipper, and the hook E, being removed from duty, would travel with the folding bed on the periphery of the cylinder which is under the forming plate E, completely around the shaft of the cylinder in the direction of the arrow, and the operation would then be repeated. Thus the machine of defendant's drawing, No. 1, is operable to open out the forward end of a tucked paper tube, and fold it down into a diamond, as shown in figure 8, of the Liddell patent. This machine would conform in all respects to the language of claim 1, claim 2 and claim 7, of the Liddell patent, except that it does not actually show all the means for operating the forming plate, and all the means for operating all the side fingers on the forming plate, and it does not actually show the connecting mechanism for timing the movements of the rotating cylinder and the forming plate.

Mr. Walkers offers in evidence the drawing which has been explained by the witness in his last answer, and requests that it be marked "Defendant's Drawing, No. 1,

John A. Shields, Examiner, Charles E. Smith, Notary Public," and it is accordingly so marked.

Objected to as immaterial, incompetent and irrelevant.

Q. 26. Please to look at the two drawings I now show you, marked "Defendant's Drawing, No. 2, John A. Shields, Examiner," and "Defendant's Drawing, No. 4, John A. Shields, Examiner," respectively, and state the purport of those drawings.

A. The defendant's drawing, No. 2, and defendant's drawing, No. 4, conform to the drawings of the Liddell patent in every respect as regards the cylinder C, the front gripper c, and the forming fingers appurtenant to the cylinder; also with respect to the forming plate E, and the side forming fingers H, H, thereof, while having a much better hook E', than that shown in the Liddell patent. But the defendant's drawing No. 2, and the defendant's drawing No. 4, agree in showing a forming plate supported by an axis X, co-incident with the edge W, and having no other axis whatever. Also the axis X, is permanently supported from above, by a bracket Z, shown broken, but which is understood to be pivoted to the frame of the machine, in such a way that the bracket may rise and fall, while moving forward and back, thus causing the pivot X to travel in the curved broken line Y, shown in defendant's drawing, No. 4, and thus carry the edge W of the forming plate E, forward and back through a curved path, as the bracket Z moves forward and back over the cylinder.

The mode of operation of the machine of defendant's drawing, No. 2, and defendant's drawing, No. 4, is the same as the mode of operation of the cylinder and forming plate E, of the Liddell patent; except that the forming plate E of the Liddell patent has its axis of support at the opposite edge of the forming plate from its axis of work; whereas, the forming plate E, of the defendant's drawing, No. 2, and defendant's drawing, No. 4, has its axis of support co-incident with its axis of work. But the work done

by the forming plate of defendant's drawing, No. 2, and defendant's drawing, No. 4, is identical with the work done by the forming plate of the Liddell patent, and would be like the forming plate of the Liddell patent, in hovering over the cylinder as it revolves, and in doing this work, in connection with all the folding beds on the periphery of the cylinder, one after another. This machine of defendant's drawing, No. 2, and defendant's drawing, No. 4, would conform in all respects to the language of claim 1, claim 2 and claim 7, of the Liddell patent; except that the defendant's drawing, No. 2, and the defendant's drawing, No. 4, do not actually show all the means for operating the forming plate, and do not actually show all the means for operating side forming fingers on the forming plate, and do not actually show the connecting mechanism for timing the movements of the rotating cylinder and the forming plate.

Mr. Walker offers in evidence the two drawings which have been explained by the witness in his last answer, and requests that they be marked "Defendant's Drawing, No. 2, John A. Shields, Examiner, Charles E. Smith, Notary Public," and "Defendant's Drawing, No. 4, John A. Shields, Examiner, Charles E. Smith, Notary Public," respectively, and they are accordingly so marked.

Objected to as immaterial, irrelevant and incompetent.

Q. 27. Please to look at the drawing I now show you, marked defendant's drawing, No. 8, and state the purport of that drawing?

A. The middle column of defendant's drawing, No. 8, shows the various elements of claims 1, 2 and 7, of the Liddell patent, No. 558,969, separated from each other. Figure 1, in said middle column of defendant's drawing, No. 8, shows a rotating cylinder, provided with one or more pairs of side-forming fingers, adapted to be moved toward and from each other, which is the matter specified in the first part of claim 1, claim 2 and claim 7, of the

Liddell patent. In this figure is also shown the front clip c. In figure 2 is shown a forming plate, also provided with side-forming fingers adapted to be moved toward or from each other, as set forth in claim 1, claim 2 and claim 7, of the Liddell patent. In figure 2 is also shown the front finger E', as set forth in claim 2, of the Liddell patent as "a finger moving with the forming plate for receiving the upper sheet of the tube and lifting it during the formative action."

In figure 3, is shown the mechanism described in claim 1, claim 2 and claim 7 of the Liddell patent, as "operating means for the forming plate, adapted to cause the said plate to oscillate about its rear edge upon the surface of the cylinder, during the rotary movement of said cylinder." In figure 4 is shown at A the means for operating the side forming fingers of the forming plate, as specified in claim 1, claim 2 and claim 7. At B of the said figure 4, is shown mechanism described in claim 1, claim 2 and claim 7 of the Liddell patent, as means for operating the side folding fingers of the cylinder. In the first column of defendant's drawing, No. 8, are shown corresponding elements from the prior art, to those in similarly numbered figures of the middle column of said drawing; while in the third column are shown portions of the defendant's machine. If we now examine figure 1 of the prior art column, which is from the Lorenz & Claussen machine, No. 534,512, it will be seen to conform exactly to the terms of the first clause of claim 1, claim 2 and claim 7 of the Liddell patent, it having "a rotating cylinder provided with one or more pairs of side folding fingers adapted to be moved toward or from each other;" and to conform exactly to the terms of the last clause of claim 1 and claim 2 of the said Liddell patent, it having "means to move the bag tube with the cylinder." Furthermore, said figure 1 conforms not only to the language of said claim, but it is the same in construction of details and mode of operation, as the cor-

responding parts of the Liddell patent; it having a cylinder C provided with a front nipper c, adapted to close and be held closed by a spring not shown, and opened by the arm C′ engaging with the cam C2. These conform in all respects of design and mode of operation, to parts having like indicated characters in the Liddell patent; except that the Liddell arm C′ is a part of a star-wheel, and instead of the cam C2 of figure 1, of the prior art column, the Liddell patent has pins C2 and C3, which devices are mechanical equivalents of those in figure 1, of the prior art column of the Defendant's Drawing No. 8. By further comparison, the substantial identity of the construction of the side-folding fingers G,G, shown in figure 1 of the prior art column, with the side-folding fingers G,G, of the Liddell patent, is apparent. The side folding fingers in both cases are pivoted to the periphery of the cylinder, and adapted to vibrate in a plane parallel to the tangent of said periphery, and held normally out of line with the bag tube by the spring J2, and which fingers G,G, may be projected inwardly so as to enter the bellows-sided folds of the tube, by the action of the cam I′ not shown.

If reference is now had to the third column of defendant's drawing, No. 8, it will be seen that but a small portion of defendant's conveyer conforms to the periphery of the cylinder; and it will presently be shown that such conformity is in no way essential to the proper performance of the functions of said conveyor. Also, it will be noted that the oscillating carrier during the major and more important part of its operation, is swung inwardly and does not conform to the periphery of the cylinder. The front clip 61, trunnioned upon the same pivot 57, on which the oscillating carrier vibrates, has a markedly different construction from the Liddell front clip, and also from the prior art; while the side clips 67, operate in a plane at right angles to the bag blank, and clamp said bag blank against the

folding bed, and are of a type quite distinct in design and operation from both Liddell and the prior art.

In figure 2, in the prior art column, in defendant's drawing No. 8, is shown the presser-plate of the Lorenz & Honiss patent, No. 337,966. In this we have, in terms of the Liddell claim, "a forming plate, adapted to oscillate about its rear edge, and provided with side forming fingers adapted to be moved toward and from each other, and a finger moving with the forming plate for receiving the upper sheet of the tube and lifting it during the formative action." In the said figure 2, the axis of support of the tucker plate coincides with the axis of oscillation, and also with its defining edge; while in the Liddell forming plate the axis of support is remote from the axis of operation. The tucker plate of the defendant's machine is no more like that of Liddell than it is like that of the prior art; in that its axis of support and its axis of oscillation is neither at its defining edge nor at the edge opposite thereto, but is midway between those edges. In the defendant's machine, as shown in figure 2 of the third column of the defendant's drawing, No. 8, the bevel-edged side nippers vibrate in a plane normal to the bag tube, and resemble the side nippers 82, of the prior art, as shown in figure 2, of the first column of defendant's drawing, No. 8, much more closely in design and mode of operation, than they do the side forming fingers of Liddell. And in efficiency of operation, the front finger 82b, of the defendant's machine, is much more closely allied to the gripper 84 of the prior art, as shown in figure 2, of the first column of defendant's drawing, No. 8, than to the finger E', of the Liddell patent, although resembling neither closely.

For the aggregation set forth in figure 3, of the middle column of defendant's drawing, No. 8, I am unable to find an equivalent in the prior art, and believe that Liddell should be accorded unquestioned right in the language of the claim, to these "operating

means for the forming plate, adapted to cause the said plate to oscillate about its rear edge." This mechanism has nineteen distinct elements; while but five distinct elements are included in the mechanism for vibrating the tucker plate on its trunnions in the defendant's machine. This defendant's mechanism is shown in figure 3, of the third column of defendant's drawing, No. 8, and its entirely different construction and mode of operation from the Liddell means, is at once apparent, as is also its simplicity and directness of action.

In figure 4, of the prior art colum of defendant's drawing, No. 8, and view A, of that figure, is shown means for operating, at definite times the side clips of the presser plate of the Lorenz & Honiss patent, No. 337,966, consisting of oscillating shafts 59 and 60, carrying at their outer ends, respectively, the said side clips respectively. At the other end of said shafts, are fastened the beveled-gears 57 and 58, respectively engaging similar beveled gears 55 and 56 respectively, on the transverse shaft 54. At the outer end of the shaft 54, are two cam arms, rolls on the free ends of which engage two independent cams respectively.

In the view indicated in a general way, by A, in figure 4, of the middle column of defendant's drawing, No. 8, is shown the means for operating, at definite times, the side forming fingers of the Liddell forming plate, consisting of arms h, h, attached to said fingers, and which arms are coupled together by the link H'. The arm H2, extending outwardly from one of the side forming fingers, engages the cam I, to cause said side forming fingers to be projected inwardly, at pre-determined times. Said fingers are retained in their outer positions respectively by the spring J, acting on the arm H2.

In the view indicated in a general way by A, in figure 4, of the third column of defendant's drawing, No. 8, is shown the means provided for operating, in proper times

the bevel-edged side clips of the defendant's machine, and to which means the description made of view A, of figure 4, of the prior art column, is entirely applicable. It will therefore appear that the means provided in the defendant's machine for operating the bevel-edged side clips, are radically different in construction and mode of operation, from the means for operating the forming fingers of the Liddell patent, and that the means employed in the defendant's machine conform much more closely to the prior art than to the Liddell patent.

In figure 4, of the prior art column and in view B, thereof, the means for operating, at definite times the side grippers G, G, of the folding-bed of the Lorenz & Claussen patent, No. 534,512, are shown. These means consist in oppositely disposed stationary cams, 23 and 24, respectively, with which the rolls on the free ends of arms G' G', respectively engage, to thrust inwardly the side grippers G, G, respectively. Said grippers are returned to their original or outward positions by springs not shown.

In view B, of figure 4, of the middle column of defendant's drawing, No. 8, are shown the means employed in the Liddell patent for operating at definite times, the side folding fingers mounted on the cylinder thereof. These means consist in arms g, g, attached to said fingers and the coupling link G', and arm G2, which last projects from one of the side folding fingers and engages with the cam I', to cause said side folding fingers to be projected inwardly at pre-determined times. Said fingers are returned to their outward positions by the springs J2, acting on the arm G2.

If comparison be now had between the mechanism in view B, of figure 4, of the prior art column, of defendant's drawing No. 8, and the means for operating the bevel-edged side clips of the defendant's machine, as set forth in view B, of figure 4, of the third column of defendant's drawing, No. 8; it will be seen that the description

which has been made of the mechanism in said view B of figure 4, of the prior art column, is entirely applicable to the said view B, of figure 4, of the third column of defendant's drawing No. 8, with the following exceptions :

The cam arms of the defendant's operating means project in a direction opposite to that of the folding fingers, and the cams thereof operate to move the fingers out of engagement, and the springs operate to move them into engagement ; while in the means cited in view B of figure 4, of the prior art column, the converse is true. This difference, however, is one of arrangement, and not of kind.

If view B, of figure 4, in each column of defendant's drawing No. 8, be compared, it will appear that the means employed in the defendant's machine for operating the beveled-edged side clips, of defendant's oscillating carrier, are not only radically different in construction and mode of operation, from the means for operating the side folding fingers of the Liddell cylinder, but that the defendant's means much more closely resembles the means of the prior art, than they do those of the Liddell patent.

Mr. Walker offers in evidence the drawing which has been explained by the witness in his answer to Q. 27, and requests that it be marked "Defendant's Drawing, No. 8, Charles E. Smith, Notary Public," and it is accordingly so marked.

Objected to as immaterial, irrelevant and incompetent.

Q. 27½. Please to look at the two pencilled sketches I now show you, which are marked "Claussen Exhibits, Nos. 1, and 5" respectively, and to the colored drawing which I now show you, which is marked "Claussen Exhibit, No. 3" ; and state what sources of information, if any, you have examined relevant to those sketches, and that drawing, and to the mechanism shown therein ?

A. I have carefully examined the two pencilled sketches marked "Claussen Exhibit, No. 1," and "Claussen Exhibit, No. 5," respectively, and I have carefully examined

the colored drawing marked "Claussen Exhibit, No. 3," and I have read the extended description of these two sketches and this drawing in the deposition of Edward E. Claussen in this case. These are the sources of my information.

Q. 28. Please to look at the drawing I now show you which is marked "Defendant's Drawing, No. 9," and explain the purport of that drawing; and if that explanation logically involves any explanation of Claussen Exhibits, Nos. 1, 5, and 3, please to refer to those Claussen Exhibits, to whatever extent is called for by the facts?

A. In defendant's drawing, No. 9, the figures in the first column thereof headed "Claussen Jan. 17, 1896," correspond in every particular to the Claussen Exhibit, No. 3, with two exceptions: First. The figures in the first column of the defendant's drawing, No. 9, show more stages in the operation of opening out a tucked paper tube and folding it down into a paper bag blank, than do the figures of the Claussen Exhibit, No. 3. Second. Said figures in the first column of defendant's drawing, No. 9, show the outline of the cylinder; whereas, in most of the figures of the Claussen Exhibit, No. 3, only a portion of the outline of the cylinder is shown. With the last noted exception, figures 1, and 2, of the first column of defendant's drawing, No. 9, are faithful copies of figures 5, and 6, respectively, of the Claussen Exhibit, No. 3.

Figures 3 and 4 of the first column of the defendant's drawing, No. 9, show further and final stages, respectively, in the said operation of opening out a tucked paper tube and folding the same down into a paper bag blank. It has been shown in the deposition of Edward E. Claussen that the Claussen Exhibit No. 3, of January 17, 1896, had its origin in the Claussen Exhibit No. 5, of November 6, 1895. The construction and mode of operation of the mechanism shown in the first column of defendant's drawing, No. 9, I will now describe:

The mechanism relates to that part of a paper bag ma-

chine for opening out the forward end of a tucked paper tube and folding it down into a paper bag blank. Said paper bag blank, as produced by this mechanism, is not of the usual diamond form, but is of a truncated diamond form, in which the rear flap of the diamond is folded inwardly and under the side folds thereof, as in the Claussen Exhibit, No. 4. This machine consists of a mutilated cylinder 6, to which is pivotally attached a carrier 6a, arranged to oscillate into said mutilation, toward and away from the center of rotation of the cylinder. This oscillation is accomplished by means of a stationary cam 8, the periphery of which engages with a roll 7, pivotally attached to the free end of the carrier 6a, and which travels with the cylinder 6, as it revolves about its axis in the direction of the arrow.

Said carrier is provided with a pair of oppositely disposed side clips 18 and 19, adapted to enter the side tucks of the bag blank and clamp them to the face of the carrier. The carrier 6a is also provided with a front clip 19, adapted to clamp the lower ply of the forward end of the bag blank to the face of said carrier by means not shown. Above the cylinder 6, and coacting with the carrier 6a, is mounted a stationary Vee plate 10, the forward edge of which is formed into two triangular projections 11 and 12. The clips 16, 16, operated by means not shown in defendant's drawing, No. 9, but fully set forth in the Claussen Exhibit No. 3, are provided to fold the forward corners of the upper ply of the bag tube over the triangular projections 11 and 12.

In stationary trunnions D, D, just below the Vee plate 10, is mounted a vibrating tucker plate P, operated by segment gears, and a cam not shown. The mode of operation of this machine is as follows:

A suitable length of tucked paper tube having been fed in above the plate 26, and under the Vee plate 10, and the tucker plate P, a sufficient dis-

tance; a front clip 19, grips the lower ply of the mouth of the bag tube to the face of the carrier 6a, and the clips 18 and 20 enter the side folds of the bag tube and clamp the lower plys thereof, respectively, to said face of the carrier 6a. The clips 16, 16, then operate to turn the forward corners of the upper ply of the bag blank over the triangular projections 11 and 12, of the Vee plate 10. At the same time the cylinder 6, revolves, and the carrier 6a is allowed by the cam 8, to move toward the center of rotation of said cylinder, thereby opening the mouth of the blank, and the tucker plate P, swings on its trunnions, its free edge defining the main transverse fold of the bag blank, as shown in Figure 2, of the first column of defendant's drawing, No. 9.

In Figures 3 and 4, the operation is continued, until in figure 4, the tucker plate has revolved about one hundred and eighty degrees, and the bag bottom has been formed. The various clips then release their hold upon the bag blank, and the said blank is delivered to mechanism to press it into permanent form, and paste and fold the forward flap.

In the middle column of defendant's drawing, No. 9, is shown a series of figures illustrating the succesive operations of opening out a tucked paper tube and folding it down into a diamond form, as performed by the second grand division of the paper bag machine of the Claussen patent, No. 598,497. The figures in said middle column of defendant's drawing, No. 9, are numbered 1 to 4 inclusive, and are faithful copies of figures 8, 10, 12 and 16, respectively of said patent, except that in the defendant's drawing, No. 9, the whole of the conveyer or cylinder is shown in each figure; while in the figures of the Claussen patent, only a part of said conveyer is shown in each figure.

It should be here stated that if said conveyer, 55, is to be called a cylinder, it should be accompanied by an explanation that that part of the periphery correspond-

ing to a cylinder, is less than half its total periphery. Furthermore, it has been shown that a part of that periphery which corresponds with the periphery of the cylinder, should be cut away to allow the tucker plate to properly perform its functions. Also, it will be seen by inspection of the drawings of the Claussen patent, No. 598,497, that the then remaining portion of the periphery corresponding to the periphery of the cylinder, is in no way necessary or useful to the machine, in the operation of making paper bags.

In the figures in the middle column of said defendant's drawing, No. 9, the conveyer 55, has pockets for two oppositely disposed oscillating carriers; but in each of these figures, only one such carrier respectively is shown. The construction and operation of the machine shown in the middle column of defendant's drawing, No. 9, is as follows:

The oscillating carrier 56, is pivoted to the conveyer 55, by the shaft 57, to the free end of which is attached the cam arm 58_c adapted to engage with the stationary cam 59, which cam is of such shape that as the oscillating carrier is carried around by the rotation of the conveyer, said carrier oscillates toward the center of rotation of the conveyer, and back again.

The oscillating carrier is provided with a front clip 6, pivotally mounted on the same shaft as the oscillating carrier 56. Said front clip is provided with means, not shown, to cause it to close upon the lower ply of the mouth of the bag blank, when said blank is delivered under it, at the proper time, and to release said blank when the co-acting mechanisms have performed their several functions. The oscillating carrier is also provided with a pair of oppositely disposed bevel-edged side clips 67, pivotally mounted beneath the folding surface of said carrier. Said side clips are provided with suitable mechanisms, not shown, to close and open them before and after, respect-

ively, the formation of the diamond bag blank. Above the cylinder is mounted the tucker plate 75, in trunnions 75a and 75b, and adapted to vibrate through a pre-deter mined stroke, and at proper times by suitable mechanism, not shown.

The vibrating tucker plate is provided with two oppositely disposed side nippers 83, 83, pivotally mounted on the trunnions of said tucker plate 75. These side nippers are provided with suitable mechanism, not shown, to open and close them at proper times.

If, now, comparision be made between the figures in the first column of defendant's drawing, No. 9, and those in the second column, of said drawing, it will be seen, first, that the oscillation of the carrier 6a of the Claussen drawing of January 17, 1896, in respect to its cylinder and the oscillation of the carrier 56, of the Claussen patent, in respect to its conveyer or cylinder, are identical, except that in the Claussen drawing, of January 17, 1896, the carrier oscillates from without the periphery of the cylinder, inwardly to substantial coincidence with said periphery, and back again, while in the Claussen patent 598,497, the carrier 56 oscillates from a position in substantial coincidence with the periphery of its conveyer, inwardly toward the center of rotation of said conveyer, and back again.

Adjourned until Friday, January 16, 1903, at eleven o'clock, A. M.

Friday, January 16, 1903, 11 o'clock A. M. Met pursuant to adjournment; counsel present as before.

The witness continues answering Q. 28, as follows:

Although in the figures of the Claussen drawing of January 17, 1896, as set forth in the first column of defendant's drawing, No. 9, the carrier 6a, oscillates inwardly to substantial coincidence with the periphery of the cylinder only, in the specification forming a part of

the Claussen Exhibit, No. 3, it is stated "the carrier 6a could, if found necessary, drop much farther down to spread the folds, than that as shown in figure 6, and then raise again to the level of the cylinder."

Continuing with the comparison of the figures in the first column of defendant's drawing, No. 9, with those in the second column thereof, it will be seen——

Second.—That the cam 59 actuating the oscillating carrier 56, through the cam arm 58, attached to shaft 57 of said oscillating carrier, of the Claussen patent, No. 598,497, embodies the same fundamental ideas as the cam 8, actuating the carrier 6a, through the roll 7, pivotally attached to the free end of said carrier, of the Claussen drawing, of January 17, 1896. The apparent difference in the profiles of the cam 8, of the Claussen drawing, and the cam 59, of the Claussen patent, is a difference of timing only, cam 8 giving to its corresponding carrier a long inward dwell, and the cam 59, giving to its carrier a long outward dwell.

Third.—That in the Claussen patent, the front clip 61, pivoted with the oscillating carrier 56, on shaft 57, and the oppositely disposed bevel-edged side clips 67, pivotally mounted on the oscillating carrier to co-act with said front clip, to clamp the lower ply of the tucked paper tube against the face of said oscillating carrier, embody the same fundamental ideas as the front clip 19, of the Claussen drawing, pivoted on the same shaft as the carrier 6a, and the side clips 18 and 20 pivotally mounted thereon, to connect with said front clip to clasp the lower ply of the tucked paper tube against the face of said carrier 6a; and that the specific construction and mode of operation of the front clip 61, and the side clips 67 of the Claussen patent, No. 598,497, and the front clip 19, and side clips 18 and 20 of the Claussen drawing of January 17, 1896, are exactly the same. It will, therefore, be seen that

the leading fundamental ideas of the oscillating carrier, its appurtenances, actuating mechanism, and the mode of operation of the Claussen patent, No. 598,497, are all to be found, and in substantially identical embodiment, in the Claussen drawing of January 17, 1896.

Continuing the comparison of the Claussen patent and the Claussen drawing, it will be seen that the tucker plate 75, of the Claussen patent, No. 598,497, vibrating in trunnions 75a and 75b, substantially remote from the defining edge thereof, and not otherwise moving, represents the leading fundamental ideas of the tucker plate P, of the Claussen drawing of January 17, 1896, vibrating on trunnions B, substantially remote from its defining edge and not otherwise moving; and that the two tucker plates are substantially the same.

As the machine shown in the Claussen Exhibit, No. 3, from which the figures in the first column of defendant's drawing, No 9, were taken, was designed to make self-opening square paper bags, like that of Claussen Exhibit, No. 4, in which the rear flap of the diamond is folded under the side folds thereof, said machine contains some parts not necessary or useful in making the so-called Deering bag, for which the machine of the Claussen patent, No. 598,497, was designed. These unnecessary parts are the plate 10, with its projecting Vees 11 and 12, and the side clips 16, 16. In the Claussen patent, No. 598,497, these parts are omitted; but as it is necessary to provide some means to hold the upper ply of the tucked paper tube against the presser-plate 75, the two oppositely disposed bevel-edged side nippers 83 are supplied, and whose source of origin I will now show.

The Claussen Exhibit, No. 1, dated November 22, 1895, sets forth a mechanism for opening out the forward end of a tucked paper tube and folding it down into a diamond blank, for self opening square paper bags of the Deering form. The construction and mode of operation of the

mechanism of the Claussen Exhibit, No. 1, I will now describe. In this description I will have recourse to the Claussen Exhibit, No. 2, which is a careful tracing of said Claussen Exhibit, No 1, made so that reference characters could be used without injury to the original drawing of Claussen Exhibit, No. 1.

Adjourned until Saturday, January 17, 1903, at 2 o'clock P. M.

Saturday, January 17, 1903, 2 o'clock P. M. Met pursuant to adjournment; counsel present as before.

The witness continues as follows in further answering Q. 28.

Figure 1 is a plan view of the mechanism with a portion of tucked paper tube in position to be operated upon. Figure 2 is a side view corresponding with the plan view of Figure 1. Figures 3 and 4 show successive steps in the operation of the mechanism. A, represents a tucker plate turning upon trunnions D, remote from its defining edge. C, C, are side fingers or tables rigidly fixed to the tucker plate and forming a part thereof, and turning with said tucker plate. B, B, are a pair of oppositely disposed bevel-edged side nippers so arranged that by suitable means, not shown, they may be moved inwardly and outwardly as to the bag blank, and they operate to clamp the upper plys of the side tucks of said bag blank, to the faces of the side fingers CC, respectively. J, is a stationary bar or table over which the tucked paper tube is fed to the mechanism, and it assists in the formation of the diamond form. In Figure 3, the tucker plate, A, has revolved about its axis, D, approximately 90 degrees, in the direction of the arrow shown in Figure 2, and the forward end of the bag blank is opened by the co-action of said tucker plate A, side fingers C, C, side clips B, B, and the side clips, E, as to the folding bed not shown. In Figure 4, the tucker plate A, has continued its revolution about the axis D, nearly ninety

degrees more, and has folded the open end of the bag blank as shown in Figure 3, into a diamond form.

Referring again to Defendant's Drawing, No. 9, and to the middle column thereof, it will be seen that the two oppositely disposed bevel-edged side nippers 83, adapted to hold the upper ply of the tucked paper tube against the tucker plate 75, between the line of its trunnions and its defining edge, and co-acting with said tucker plate to raise the upper ply of the front end of the tucked paper tube and fold it into the rear part of the diamond form, represent the leading fundamental ideas of the side clips B, B, co-acting with the presser-plate A, between the line of its trunnions and defining edge of the Claussen Exhibits, Nos. 1 and 2, and the construction and mode of operation are substanially the same. Therefore, it will be seen that the second grand division of the Claussen patent, No. 598,497, had its origin co-jointly, in the Claussen Exhibit, No. 3, the Claussen Exhibit, No. 1, and the Claussen Exhibit, No. 5.

The third column of Defendant's Drawing No. 9, shows in a series of figures the diamond folding mechanism of the defendant's machine. In each of the figures is shown the rotating conveyer of said defendant's machine, and in each of the figures respectively said conveyer has places for three oscillating carriers; but for convenience, and clearness, but one such oscillating carrier is shown in each figure respectively. The figures of the third column of defendant's drawing, No. 9, show successive positions of the parts in the operation of opening out and folding down into a diamond, the forward end of a tucked paper tube. I will now describe the machine and the mode of operation thereof. The oscillating carrier 56, is pivoted to the conveyer 55, by the shaft 57. Projecting from the under side of the oscillating carrier is an arm 58, on the free end of which is pivoted a roll 60, adapted to engage with the stationary cam 59, which cam is of such shape

that as the oscillating carrier is carried around on the rotating conveyer 55, said carrier oscillates toward the center of rotation of the conveyer, and back again.

The oscillating carrier is provided with a front clip 61, pivotally mounted thereon, (by means not shown), on the same axis as the oscillating carrier. Said front clip is provided with means, not shown, to cause it to close upon the lower ply of the forward end of the tucked paper tube, when such tucked paper tube is delivered under it at the proper time, and said clip is caused to release the same, when the coacting mechanisms have performed their functions. To aid and begin the formation of the diamond fold at a pre-determined time, the diamond forming fingers 70 and 71, are provided, suitably mounted upon the yoke-shaped frame not shown, of the front clip 61. Suitable means, not shown, are provided for operating the diamond forming fingers at the proper times. The oscillating carrier 56 is also provided with a pair of oppositely disposed bevel edged side clips 67, pivotally mounted between ears 69, 69, beneath the folding surface of said carrier. These side clips are provided with suitable mechanism, not shown, to operate them at proper times, in the formation of the diamond.

Above the paper bag blank is mounted a tucker plate 75, on trunnions 75a, and 75b, and adapted to vibrate through a pre-determined stroke in proper time, by means of suitable mechanism, not shown, and not otherwise moving. This vibrating tucker plate is provided with two oppositely disposed bevel-edged side nippers 83, pivotally mounted upon the frame of said tucker plate, and which side nippers are provided with suitable mechanism not shown, to close and open them in proper times. Said tucker plate has an extension away from its trunnions, in a direction opposite to that of its defining edge, and on the outer edge of this extension is mounted the finger 82b, from which point said finger extends nearly to the defin-

ing edge of said tucker plate. Said finger is adapted to receive the front end of the upper ply of the bag tube and hold it against the face of said tucker plate, during the operation of opening the forward end of the tucked paper tube, and folding the same down into a diamond.

In the third column of defendant's drawing, No. 9, the fundamental ideas embodied in the conveyer 55, oscillating carrier 56, front clip 61, side clips 67, arm 58, roll 60, and cam 59, embody the same fundamental ideas as are embodied in the conveyer 55, oscillating carrier 56, front clip 61, side clips 67, arm 58, roll 60, and cam 59, of the Claussen patent, No. 598,497, as set forth in the middle column of defendant's drawing, No. 9, and have substantially the same mode of operation.

The diamond folding fingers 70 and 71, co-acting with the front clip 61, in defendant's machine, are not to be found in the Claussen patent, No. 598,497, but are to be found in the Claussen & Mortson patent, No. 635,090. Also in defendant's machine, as set forth in the third column of defendant's drawing, No. 9, the extension of the tucker plate from its trunnions in a direction opposed to its defining edge, and the finger 82b, mounted thereon, are not found in the Claussen patent, No. 598,497, but are found in the Claussen & Mortson patent, No. 635,090; but are not claimed in that patent, as they are old in the art being found in the Cross patent, No. 222,464, of December 9, 1879, and combined with side clips in Lorenz & Honiss patent, No. 337,966. All the other features of the tucker plate 75, vibrating on trunnions 75a and 75b, substantially remote from the defining edge thereof, and not otherwise moving, and the side clips 83, to hold the upper ply of the tucked paper tube against the face of the tucker plate between the line of its trunnions, and its defining edge, embody all the fundamental ideas of the tucker plate 75, vibrating in trunnions 75a and 75b, substantially remote from its defining edge, and not otherwise moving,

and side clips 83, to hold the upper ply of the tucked paper tube against the face of the tucker plate between the line of its trunnions and the defining edge of the Claussen patent, No. 598,497, and are substantially the same in their mode of operation. It will therefore be seen that the second grand division of the defendant's machine, embodies all the fundamental ideas of the Claussen patent, No. 598,497; which fundamental ideas are shown to have had their origin in Claussen Exhibit, No. 1, of November 22, 1895, and the Claussen Exhibit, No. 3, of January 17, 1896, and the Claussen Exhibit, No. 5, of November 6, 1895.

Mr. Walker offers in evidence the drawing which has been explained by the witness, in response to Q. 28, and requests that it be marked "Defendant's Drawing, No. 9, Charles E. Smith, Notary Public," and it is accordingly so marked.

Objected to as immaterial, incompetent and irrelevant.

Q. 29. The last five paragraphs of your last answer, have attended to the third column of defendant's drawing, No. 9, and in those paragraphs, you speak of that column of four figures, as showing the diamond folding mechanism of the defendant's machine. Please to state what particular machine of the defendant was followed in making that column of figures?

A. The figures in the third column of defendant's drawing, No. 9, conform in all respects to the machine known as the Walker Model-Room Machine, and were carefully copied on a reduced scale, from that machine.

Q. 30. Please now, to attend particularly to the part which is indicated by the numeral 55, in the third column of figures in defendant's drawing, No. 9, and state by what name, or names, that part might be denominated; and if any of those names require qualification or explanation in order to be not misleading, please to state such qualification or explanation, and in this connection, please to make

whatever relevant statements occur to you, about the part which is marked 56 in the third column of defendant's drawing, No. 9?

A. The central rotating part of the defendant's machine, indicated in the third column of defendant's drawing No. 9, by the numeral 55, has been called by choice, a rotary conveyer. It has also been called a cylinder, and oscillating carrier frame. Said rotating frame 55, is not a cylinder, but is a conveyer provided with oscillating carriers 56, which vibrate from the circle of revolution toward the axis of revolution and back again. If the rotary conveyer 55, is to be called a cylinder, such designation should be accompanied by the explanation that the folding beds thereof do not rotate about an axis in one circle like the folding bed of Liddell; but quite otherwise than this, those folding beds oscillate from the outer circle of rotation toward the axis of rotation and back again. Furthermore, any likeness which the defendant's rotary conveyer may bear to a cylinder, is unessential as the operation of the machine in no way requires that any part of the periphery of said conveyer conforms to the circumference of a cylinder. The requirements of the machine, as to the conveyer, would be met, if said conveyer were a skeleton frame carrying, mounted thereon, suitable bearings for the oscillating carriers, front clip actuators, and bag blank retainers.

The use of a portion of the periphery of the carrier frame, as an ironing bed is also unessential, as the oscillating carrier could extend rearwardly a sufficient distance, about one inch further, to allow of all the diamond ironing to be done thereon as the major portion of it is now done. The conformation of the periphery of the oscillating carrier, during a portion of its forward movement, about the main shaft, to the periphery of the cylinder concentric with said shaft, is inessential. Said oscillating carrier would be equally operative, if it conformed in profile to the carrier shown in figures 29 and 30, of the Claussen patent, No. 598,497. The

only modification of the defendant's machine required to meet this change in the profile of the oscillating carriers, would be in the profile of the carrier actuating cam. It would be required to so modify said profile that the face of the carrier would be kept in rolling contact with the ironing sector and the creasing roll, during its co-acting therewith. If the oscillating carrier of the defendant's machine was fixed and rigid in its outer position, and did not oscillate toward and away from the axis of revolution, it would not co-act with the defendant's tucker plate, but would so bend or break said tucker plate as to render it inoperative.

Q. 31. I call your attention to the fact that the Walker Model-Room Machine, as shown in the third column of defendant's drawing, No. 9, contains the combination of a rotating conveyer; an oscillating carrier having its forward end pivoted to the conveyer; and mechanism to oscillate the carrier radially of the conveyer, as you have more elaborately explained in your last answer. Now, please to state in what letters patent of the United States, that combination first appeared in paper bag machinery?

A. I have carefully examined the prior art of paper bag machinery, as set forth in the United States patents to fix, as far as possible, the time of the introduction into the art, of the inwardly and outwardly oscillating folding beds or carriers revolving about a fixed axis of support, as in the Walker Model-Room Machine referred to. And while I find numerous folding beds, revolving in one circle about a fixed axis, as in that of Lorenz & Claussen patent, No. 534, 512, the Stilwell patent, No. 417,346, the Lorenz & Honiss patent, No. 333,647, etc., back to the Cross patent, No. 240,972, of May 3, 1881; I find no earlier record of an inwardly and outwardly oscillating carrier, revolving about a fixed axis, than that disclosed in the Claussen patent, No. 598,497, of February 8, 1898.

Q. 32. Please now to particularly examine that Claussen patent No. 598,497, and state whatever you know relevant to the return of the movement of the tucker plate 75, from its position in figs. 15 and 16 of that patent, where it has completed its work upon one paper bag blank, back to its position in figures 7 and 8, of that patent, so that it may do its work upon another paper bag blank?

A. In the Claussen patent No. 598,497, there is no provision made in the cylinder for the return movement of the tucker plate 75, after it has performed its function of assisting in the opening of a tucked paper tube and folding the same down into a diamond form. But a mechanical engineer skilled in the art of building such a machine, according to said patent, would naturally provide room for the return movement of said tucker plate, by making a recess in the conveyer at a point adjacent to the numeral 55, in figure 4 of the drawings of said patent, and a like recess diameterally opposite thereto, near the numeral 57, in the same figure. Edward C. Claussen, in his deposition, testified that in the building of the first machine in accordance with the drawings of this patent, such recesses were provided in the conveyer, and in fact they were provided in the first working drawings that were made of such a machine before the machine was built.

Q. 33. Please to specify by their numbers, those of the claims of the Claussen patent No. 598,497, with which the Walker Model-Room Machine conforms?

A. The Walker Model-Room Machine conforms to claim 1, claim 2, claim 3, claim 4, claim 5, claim 6, claim 7, claim 8, claim 9, claim 10, claim 11 and claim 12 of the Claussen patent, No. 598,497; and I find no other claim of said patent, to which the Walker Model-Room Machine conforms.

Q. 34. Please now to look at the Claussen & Mortson patent, No. 635,090, of October 17, 1899, and state what

contribution, if any, taken out of the inventions of that patent, you find in the Walker Model-Room Machine?

A. The contributions from the Claussen & Mortson patent, that I find in the Walker Model-Room Machine, are as follows:

First.—That portion of the tucker plate extending in a direction opposite to its defining edge, and the hook mounted thereon. Second. The yoke-shaped front clip and the diamond forming fingers mounted thereon. Third.—The general plan of the rear flap folding mechanism, but differing somewhat in construction and mode of operation. Other than these, I find no contributions from the Claussen & Mortson patent, that are not found in the Claussen patent, No. 598,497, in the Walker Model-Room Machine.

Q. 35. I call your attention to the fact that the tucker plate of the Walker Model Room Machine turns on a stationary axis midway between its edges, and not otherwise moving; and I ask you to state where a tucker plate thus turning on a stationary axis midway between its edges, originated in the art of paper bag machinery?

A. Of the various tucker plates which have appeared in the prior art of paper bag machinery, as set forth in United States patents, the earliest that I find is that shown in Lorenz & Honiss patent, No. 337,965; and this tucker plate has a rising and falling movement only, in a plane substantially parallel to the travel of the bag blank. In Lorenz & Honiss patent, No. 337,966, is found a tucker plate vibrating upon a fixed axis co-incident with its defining edge. In Lorenz & Honiss patent, No. 361,951, is found the rising and falling tucker plate, like that of Lorenz & Honiss patent, No. 337,965. And again the same, in Lorenz & Claussen, No. 410,841, and Lorenz & Honiss, No. 410,842. In Patterson, No. 446,839, is found a tucker plate oscillating upon a pivot remote from its forming edge, and which performs similar functions to the rising

and falling tucker plate of Lorenz and Honniss, 337,965. In Crowell No. 510,410, is found a tucker plate turning upon a pivot co-incident with its defining edge. And in the Crist patent, No. 543,571, is a tucker plate also turning upon a pivot, opposite to its defining edge. In the Liddell patent, No. 558,969, we have the same. In the Claussen patent, No. 598,497, we find a tucker plate turning upon fixed trunnions remote from its defining edge, while in the Claussen & Mortson patent, No. 635,090, we find a tucker plate differing from all the preceding in that it turns upon a fixed axis midway of its edges and not otherwise moving; which features are the features of the tucker plate of the Walker Model-Room Machine.

Q. 36. Please now to compare the Liddell patent, No. 558,969, with the Walker Model Room Machine; and state whether the cylinder C, of the Liddell patent, could be substituted for the rotating conveyer and its oscillating carriers of that machine, so that the Liddell cylinder C would co-operate with the tucker plate of the Walker Model-Room Machine in opening out one end of a tucked paper tube, and folding it down into a diamond form?

A. The cylinder C, of the Liddell patent, No. 558,969, is not interchangable with the rotary conveyer and oscillating carrier of the Walker Model-Room Machine. Assuming that the Liddell machine was in existence, and its cylinder substituted for the conveyer and oscillating carrier in the Walker Model-Room Machine, said cylinder would not co-operate with the tucker plate of said machine, but would so bend or break said tucker plate as to render it inoperable. Furthermore, if, on the contrary, the rotary conveyer and oscillating carriers of the Walker Model-Room Machine were substituted for the cylinder C of the Liddell machine, they would fail to co-operate with the former plate of the Liddell machine; as said former plate would go through its motion so remote from the operating surface of the oscillating conveyer, as to be in-

operative. It will, therefore, appear that the revolving conveyer and oscillating carrier of the Walker Model-Room Machine and the cylinder of the Liddell machine, do not perform the same function in substantially the same way.

Q. 37. Please now to compare the forming plate E, of the Liddell patent, No. 558,969, with the tucker plate of the Walker Model-Room Machine, and state whether those two plates are interchangable, so that that tucker plate might be used in the Liddell machine, or so that the forming plate E, of the Liddell machine might be used in the Walker Model-Room Machine?

Objected to as immaterial.

A. If the tucker plate of the Walker Model-Room Machine and the actuating mechanism thereof, were applied to the Liddell machine, the cylinder of said machine and the tucker plate of the Walker Model-Room Machine would not co-act; as said tucker plate vibrating upon a fixed axis located midway of its rear and defining edges, would either penetrate the cylinder of the Liddell machine, or be so bent or broken in the attempt, as to render said tucker plate inoperable. Neither would the side nippers of the tucker plate of the Walker Model-Room Machine find means in the Liddell machine for their operation. Conversely, assuming that the Liddell folding plate was procurable, and its actuating mechanism so designed as to cause it to co-act with the Liddell cylinder, and said folding plate and its operating mechanism applied to the Walker Model-Room Machine; said Liddell folding plate would fail to co-act with the oscillating carrier of the Walker Model-Room Machine, to effect the unfolding of the forward end of a tucked paper tube into a diamond form; as the said folding plate would go through its motion so far from the working surface of said oscillating carrier, as to be inoperative. Also, the forming fingers of the Liddell forming plate would find no means in the

Walker Model-Room Machine for their operation. It is therefore to be seen, that the tucker plate of the Walker Model-Room Machine, and the Liddell forming plate, do not perform the same function in substantially the same way.

Adjourned until Monday, January 19, 1903, at 11 o'clock A. M.

Monday, January 19, 1903, 11 o'clock A. M. Met pursuant to adjournment, counsel present as before.

Q. 38. Please to compare the side folding fingers H, H, of the Liddell forming plate, and also the side forming fingers G, G, of the Liddell cylinder, on the one hand, with the bevel-edged side clips which work in connection with the tucker plate, and also the bevel-edged side clips which work upon the oscillating carrier of the Walker Model-Room Machine; and state whether those instrumentalities of Liddell and those instrumentalities in the Walker Model-Room Machine, are substantially alike, or are substantially different, in construction and mode of operation?

Objected to as immaterial and irrelevant.

A. Referring to the defendant's drawing, No. 11, and to the drawings of the Liddell patent, I will first compare the side clips pertaining to the respective folding beds thereof. In defendant's drawing, No. 11, the side clips of the Walker Model-Room Machine are shown at 67, and as they are both alike, I will describe only one. That part of the clip which co-acts directly with the folding bed, to clamp the lower ply of the bag tuck thereto, consists of a bevel-edged plate-like portion, having extending rearwardly therefrom, a cylindrical part adjustably clamped in the upper end of a carrying arm, which arm is pivotally supported between horns 69, 69, projecting outwardly and downwardly from the under side of the oscillating carrier. The clip is closed and held in a closed position by means

of a spring, not shown, in defendant's drawing 11, but fully shown in figure 4 of the third column of defendant's drawing, No. 8, where it is marked J2. The said clip 67 is opened by means of the cam roll 67a, pivotally supported upon the lower end of the clip arm, engaging with the stationary cam 23, or 24, rigidly fixed to the frame of the machine. The description made of one side clip is entirely applicable to the other, and their means for operation are entirely separate and independent of one another, with the exception of the spring J2, which acts to close both side clips. The said side clips have their pivotal shafts in a plane parallel to the working face of the carrier, and said clips operate in a plane substantially at right angles to said working surface of the carrier. They therefore operate not only to indidate in a general way, the positions at which the diamond folds are to be made, but they also so clamp and hold the lower ply of the bag plank, as to hold it against shifting on the folding bed, and define the folds thereof, in a positive and efficient manner.

The side folding fingers of the Liddell cylinder, are constructed and operated as follows :

The fingers G, G, are pivoted at one end of each, respectively, upon and normal to, the periphery of the cylinder C, and out of the line of the path of the bag tube. From hubs on their pivot ends, are stems extending through the rim of the cylinder, to which outer ends of said stems are fixed arms g, g, which arms are linked together at their outer ends by the link G′. Attached to one of the arms g, g, is an arm G2, which engages with a stationary cam, I′, to cause the fingers G, G, to swing inwardly at predetermined times.

As the fingers G, G, are pivoted normal to the face of the cylinder C, and are operated parallel to a tangent to the surface of the circumference of the cylinder, but some appreciable distance therefrom, they operate to indicate, in

a general way only, where the diamond forming should take place, and do not co-act with the cylinder to clamp the side folds of the lower ply of the bag blank thereto. It will therefore be seen that the side forming fingers of the oscillating carrier of the Walker Model-Room Machine, pivoted to clamp said bag blank onto the oscillating carrier, are substantially different in construction and mode of operation from the side forming fingers of the Liddell cylinder, operating in a plane parallel to a tangent to the circumference of the cylinder, and perform different functions in a markedly different way.

Referring again to the Defendant's Drawing, No. 11, and to the bevel-edged side forming fingers 62, 62, operating in connection with the oscillating tucker plate thereof, and also to figure 4, of the third column of Defendant's Drawing, No. 8, I will now describe the construction and mode of operation of these fingers:

Referring particularly to view A, figure 4, in the 3rd column of Defendant's Drawing, No. 8, the bevel-edged side forming fingers, indicated in the drawing, by 61, and 62, are mounted upon oscillating shafts 59, and 60, turning upon axes parallel to the working edges of said bevel-edged fingers. At the rear ends of said oscillating shafts, are segment gears engaging with similar segment gears on the shaft 54, running transversely to the mechanism. At the outer end of shaft 54, is a double-ended cam arm 10, a horn on one end of which engages with the revolving cam 12, which, through said arm 10, operates to close the side forming fingers; and a horn on the other end of said arm 10, engages with the stationary cam 11, to hold said side fingers closed, after they have been closed by the action of said cam 12. Referring now to Defendant's Drawing, No. 11, said side forming fingers are opened after being liberated by the cam 11, by the action of the spring 80, on shaft 54. Said side forming fingers 62, vibrating in a plane substantially at right angles with the plane of the working

face of the tucker plate, are operable not only to define in a general way, the places where the diamond folds should be made; but are effective to so clamp and hold the upper plys of the tucks of the bag tube, against the face of tucker plate, as to clearly define and form the folds of the diamond.

Referring now to the drawings of the Liddell patent, particularly figures 2, 3, and 4, I will explain the construction and mode of operation of the side forming fingers of the former plate thereof. Said side forming fingers H, H, are mounted upon the forming plate E, and pivoted thereto, at one end of each forming fingers, respectively, out of the path of the bag blank. From hubs at the pivot ends of said forming fingers H, H, shafts project through said forming plate, and have attached to their outer ends respectively, arms h, h, which arms are linked together by the connecting rod, H', in such a manner as to cause them to work simultaneously, but in opposite directions. Attached to one of the arms, h, h, is an arm H2, adapted to engage with the cam I, and planned to operate to close at proper times, the side forming fingers H, H. Said fingers are opened by means of the spring J, operating on the arm H2. Said side forming fingers being operated in a plane parallel to the face of the forming plate, indicate, in a general way only, the location of the diamond folds; and as they do not definitely clamp or hold the bag blank, to the forming plate, they fail to specifically define the folds of the diamond as to the said forming plate. It will therefore be seen that the diamond side forming fingers of the Walker Model-Room Machine operating in a plane at right angles to the working surface of said tucker plate, and operative to not only define in a general way, the folds of the bag blank, but to so clamp and hold said bag blank as to clearly define and form said folds, are substantially different in their construction and mode of operation, from the side forming fingers of

the Liddell tucker plate operating in a plane parallel to said tucker plate, and indicating in a general way only the folding of the bag blank thereon.

Q. 39. I call your attention to claim 1, of the Liddell patent, and to the last element of that claim, which is specified therein as "means to move the bag tube with the cylinder"; and I call your attention to the same element, specified in the same words at the end of claim 2, of that patent; and I ask you to state what device in figure 1 of the second column of Defendant's Drawing, No. 8, and what device in figures 1, 2, 5, 6, 7 and 8 of the Liddell patent, appears to be the "means to move the bag tube with the cylinder" which is thus specified as the last element of claim 1, and also the last element of claim 2, of the Liddell patent?

A. In figure 1, of the middle column of Defendant's Drawing, No. 8, and in figures 1, 2, 5, 6, 7, and 8, of the Liddell patent, the only means shown to move the bag tube with the cylinder, is the front clip indicated by c.

Q. 40. Please to state where, if anywhere, or at least state a few places, in the paper bag machine patents prior to the Liddell patent, wherein such a front clip is shown clasping the forward end of a paper tube to a cylinder, so as to enable the cylinder to move the bag tube along with itself, as it revolves?

Objected to as immaterial.

A. In the Lorenz & Claussen patent, No. 534,512, is shown a front clip indicated in the drawings of that patent, as 29, that is used as means to cause the bag tube to travel with the cylinder.

Q. 41. I call your attention to the fact that no "means to move the bag tube with the cylinder" is mentioned in claim 7, of the Liddell patent. And I ask you to state whether that element is implied in that claim, by reason of its necessity to the utility of the cylinder, on the one hand; or whether, on the other hand, there is an absence

of such implication growing out of the absence of such necessity?

Objected to as incompetent.

A. Claim 7, of the Liddell patent, would be inoperative without means to move the bag tube with the cylinder. I do not consider that the "means to move the bag tube with the cylinder" are implied in claim 7, of the Liddell patent. My understanding of the claims of a patent are, that they shall state in specific terms, all that is covered by such claims, respectively, and that no elements that are specifically left out, are specifically implied.

Q 42. Now please to explain what instrumentalities, in the Walker Model-Room Machine operate, upon the forward end of the paper bag blank, at the location where the Liddell front clip c, presses upon that place; and in so doing, please to point out all the mechanisms which, in the Walker Model-Room Machine, operate upon the upper side of the lower ply of the forward end of the paper bag blank, while that blank is being folded into the diamond form?

Objected to as leading, and immaterial.

A. In the Walker Model-Room Machine, as set forth in the Defendant's Drawing, No. 11, the double front clip 61, conforms substantially in its operation to the front clip c, of the Liddell patent, which has been shown to be old in the art. Mounted upon the yoke-shaped frame of the clip 61, are a pair of diamond forming fingers 70 and 71, which enter the mouth of the bag blank and assist in the formation of the folds of the forward part of the diamond, and which also assist, at a certain stage, in moving the bag tube with the carrier. The side clips 67, are so trunnioned, as to operate to clamp the lower ply of the bag blank, against the face of the folding bed, and as they perform this function before the bag blank has been liberated by the feed-rolls, said fingers, 67, not only assist in moving the bag blank with the carrier, but are important factors in

locating the bag blank on the folding bed with precision. Before said fingers 67, and front clip 61, have released their hold upon the bag blank; the bag blank retainers 180, 180, clamp the lower ply of the side tucks of the bag tube, against the oscillating carrier, and hold the same securely in position until such time as all the mechanisms co-acting with the said carrier, have performed their functions.

Q. 43. You have referred to Defendant's Drawing, No. 11; and I now ask you to state in a general way, at first, what that drawing represents?

A. Defendant's Drawing, No. 11, is a construction drawing of the rotary conveyer, with its oscillating carriers, and the tucker plate, with their operating mechanisms, respectively, of the Walker Model-Room Machine.

Mr. Walker offers in evidence the drawing mentioned in the last answer, and requests that it be marked "Defendant's Drawing, No. 11, Charles E. Smith, Notary Public," and it is accordingly so marked.

Complainant's counsel objects to the same as immaterial, irrelevant and incompetent.

Complainant's counsel asks Mr. Walker whether he offers this drawing in evidence as a correct and accurate illustration of the parts there shown, in one of defendant's machines.

Mr. Walker states that the drawing in question is correct and accurate, as far as it goes; but that the Walker Model-Room Machine is so complex, that it is impossible to make any one drawing correctly and accurately illustrate all the parts indicated in Defendant's Drawing, No. 11.

Q. 43½. Please to compare the front hook 82b, of the Walker Model-Room Machine, with the front hook E′, of the Liddell patent, and with any corresponding hook in the prior art, and state whatever you have to say about their respective forms and efficiencies?

Complainant's counsel objects to any and all testimony as to the machine in this office referred to as "Walker Model-Room Machine," on the ground that it is referring to matters not in evidence before the court, so that the court has not an opportunity to itself examine the machine about which the witnesses have testified; but complainant's counsel, in view of the character of the machine as heretofore spread upon the record, will not press this objection, if Mr. Walker will supplement his agreement of Friday, December 12, 1902, by an additional agreement to produce that machine in the same condition that it now is, and has been since that agreement was made, at the hearing of this cause, as complainant's counsel recognizes the propriety in Mr. Walker's desiring to retain control of that machine, until that time.

Mr. Walker declines to agree to produce the Walker Model-Room Machine at the hearing; because it weighs about two tons, and is so massive and hard to move, that it may be impossible to get the machine into the court-room, or even to elevate it to the court-room floor. The machine is only one of fifty-nine or sixty machines of the Continental Paper Bag Company, complained of in this case, and there seems to be no better technical necessity for producing one of them at the hearing, than for producing all of them. It frequently occurs in patent cases that secondary evidence is received of the character of defendant's machinery, without producing that machinery in court; and such reception of secondary evidence is absolutely necessary in many patent cases, where the defendant's machines or other apparatus, are so massive that they cannot practically be transported from place to place and taken into court-rooms.

Complainant's counsel replies to the foregoing, and states to the Court, that if Mr. Walker were desirous that the Court should see this machine, Mr. Walker could easily see that this machine, although it does weigh two

tons, could be elevated to the court-room, since this machine has been elevated twenty-five stories, to Mr. Walker's office. As to its being massive, complainant's counsel states that it now occupies a portion of a room approximately eight feet wide by twenty feet long, and therefore the machine is not so massive that it could not be introduced into the court-room. Thirdly, the machine could be taken apart if too massive or heavy to be transported, as it is, and then re-assembled in the court-room.

In view, however, of Mr. Walker's unwillingness that the Court should see this machine, complainant's counsel must object to any and all testimony concerning the same, as incompetent and improper; and in order not to burden the record by entering repeated objections of this kind, he states that he now, once and for all, enters this objection.

Mr. Walker states that the machine in question was elevated twenty-five stories, in the Park Row building, New York, by means of a powerful elevator in that building, which is operated by a powerful special mechanism for heavy safes, and other structures, and that it would be entirely unsafe, if not impossible, to lift the Walker Model-Room Machine in any ordinary elevator raised by wire ropes. And though the machine can be taken apart to some extent, its massive frame is one piece of cast iron, and cannot be taken apart.

Mr. Walker states that he is not unwilling that the Court should see the machine, but on the contrary much desires that inspection to be made, and also that the Court should see all of the machines of the Continental Paper Bag Company, and examine them all as fully as possible. To this end, Mr. Walker hopes that it may be possible to have the Walker Model-Room Machine present at the hearing; but he cannot at present agree to accomplish that result, because that result may not be possible of accomplishment.

A. In figure 2, of the third column of defendant's drawing, No. 8, the front finger of the Walker Model-Room Machine is shown at 82b, and in defendant's drawing, No. 11, the same finger is shown under the same indicator character. Said front finger extends from the extreme front edge of the tucker plate 82, across its center of support, and nearly to its rear or defining edge 82a. The said hook at its point, and for about one-quarter of its length therefrom, stands away from said tucker plate, to allow the forward end of the upper ply of the paper bag blank to enter over it with ease. From this point, and throughout the remainder of its length, said finger lies much closer to the face of said tucker plate 82, and is thereby efficient to retain the upper ply of the forward end of the bag blank, against said tucker plate.

The finger E′ of the Liddell patent, No. 558,969, is crude in design, and inefficient in operation. First, the operating end thereof is so remote from the face of the forming plate, E, as to render it inefficient to open the bellows-side folds of the paper bag blank, in time to permit the free entrance of the fingers G and H therein, as set forth in the specification of the Liddell patent. Second, the said finger E′ is so short that it would not retain its hold on the paper bag blank a sufficient time to open the same and to assist in refolding it into a diamond form; but, on the contrary, in all probability, would allow the bag blank to slip off, thereby forming the diamond inaccurately. In the prior art, as shown in the Cross patent, No. 222,464, is disclosed a front finger mounted on a folding plate, which front finger is indicated at k3 in figure 9 of said patent. The front finger 83b of the defendant's machine is better designed, and more efficient than the finger shown in the Cross patent; but the finger shown in the Cross patent is much superior to and more efficient than the front finger E′ of the Liddell patent.

Q. 44. I now call your attention to the fact that claim 2

of the Liddell patent specifies as one of its elements "a finger moving with the forming plate"; and I ask you to state what finger shown in the drawings of the Liddell patent is referred to by that language in claim 2 of that patent?

A. The finger E' shown in the drawings of the Liddell patent is the finger indicated in claim 2 of said patent as "a finger moving with the forming plate."

Q. 45. I now call your attention to the fact that claim 2 of the Liddell patent contains the following language: "operating means for the forming plate"; and also contains the following language: "power devices for returning the forming plate to its original position." Please to state whether these two sets of words refer to the same mechanism shown in the drawings of the Liddell patent; or refer to different mechanisms shown in those drawings?

Objected to on the ground that th question does not quote all of the words appearing in the claim appertaining to the parts mentioned, since the claim claims "operating means for the forming plate, adapted to cause the said plate to oscillate about its rear edge upon the surface of the cylinder, during the rotary movement of said cylinder, for the purpose of opening and forming the bottom of the bag tube," and the other phrase in this claim reads in whole, as follows, "power devices for returning the forming plate to its original position."

A. In general, they refer to the same mechanism.

Q. 46. Now, please to specify, by reference to defendant's drawing, No. 8, which figure of that drawing represents that mechanism?

A. Figure 3, of the middle column of that drawing.

Q. 47. I now call your attention to the fact that claim 7, of the Liddell patent, contains the same words as claim 2, in respect of "operating means for the forming plate"; while claim 7 differs from claim 2, in using the words "connecting mechanism for timing the movements of the

rotating cylinder and the forming plate," instead of the words "power devices for returning the forming plate to *its original position*"; *and I* ask you whether all three of these sets of words, namely, "operating means for the forming plate," and "power devices for returning the forming plate to its original position," and "connecting mechanism for timing the movements of the rotating cylinder and the forming plate" refer to the same mechanism, in the drawings of the Liddell patent, or refer to different mechanisms in those drawings, as the case may be?

Same objection as objection to Q. 45.

A. In general, they refer to the same mechanism; which is the mechanism shown in figure 3, of the middle column of defendant's drawing, No. 8.

Q. 48. You have explained heretofore, in this deposition, that a rotating cylinder provided with one or more pairs of side folding fingers, adapted to be moved toward or from each other, like that mechanism in the Liddell patent, existed in the prior art, as shown in figure 1, of the first column of defendant's drawing, No. 8. And you have also explained that a forming plate provided with side forming fingers adapted to be moved toward or from each other, and means for operating said fingers at definite times during the formative action of the bag tube, existed in the prior art, as shown in figures 2 and 4 of the first column of defendant's drawing, No. 8. Now, I ask you to state where, if anywhere, in the prior art, these two sets of mechanisms were combined by co-relating mechanism in one machine?

Objected to as being a conclusion on the part of Mr. Walker, to what the witness has testified.

A. I have been unable to find any instance in the prior art, where these two sets of mechanisms are combined by co-relating mechanism in the same machine.

Q. 49. Now please to state what opinion you have

obtained of the value, or want of value, as the case may be, which characterizes the Liddell co-relating mechanism, shown in figure 3 of the middle column of defendant's drawing, No. 8, and explained in the Liddell patent as being the mechanism by which he co-relates the rotating cylinder, and side folding fingers below the paper bag blank, with the forming plate and side forming fingers above the paper bag blank, so as to make those two sets of mechanism co-operate, in opening out one end of a tucked paper tube into a diamond form?

A. The mechanism set forth in figure 3 of the middle column of defendant's drawing, No. 8, is of a low order of engineering, and contains a multiplicity of elements, which as they are used in sequence as elements in a train, would fail to efficiently and continuously operate to perform the functions set forth in the claims of the Liddell patent. This mechanism was more fully analyzed, and its elements commented upon earlier in this deposition. The mechanism is lacking in at least one element, to wit: means for keeping the cam end of arm k, in contact with the periphery of its cam. Furthermore, the natural and inevitable accumulation of back-lash, caused by the use of this mechanism, would prove very detrimental to its efficient action.

Q. 50. State whether the problem of co-relating a continuous cylinder, like that of the Liddell patent, with an oscillating forming plate like that of the Liddell patent, on the one hand; and the problem of co-relating a rotating conveyer having a radially oscillating carrier, like that of the Walker Model-Room Machine, with an oscillating tucker plate like that of the Walker Model-Room Machine, on the other hand; was the same problem, or was a substantially different problem?

Objected to as immaterial.

A. The elements of the two mechanisms are so different in their construction and mode of operation, that the co-

relating of their principal features, respectively, would present a very different problem, to be approached from a different standpoint, and solved by different means.

Q. 51. Please now to compare the co-relating mechanism shown in figure 3, of the middle column of defendant's drawing, No. 8, with the co relating mechanism shown in figure 3, of the third column of that drawing; and state whether those two co-relating mechanisms, as they exist in the Liddell patent, and in the Walker Model-Room Machine respectively, perform the same functions in substantially the same way, on the one hand; or whether on the other hand, they perform unlike functions in unlike ways?

A. The mechanism set forth in figure 3, of the middle column of defendant's drawing, No 8, consists, as explained in detail earlier, of a train of gearing, a portion of which is carried upon an oscillating arm, and cams to operate said train of gearing and said arm, to cause the forming plate E, of the Liddell patent, to vibrate through a complicated path. This mechanism as stated, consists of a multiplicity of elements, and having an intricate co-action.

In figure 3, of the third column of the defendant's drawing No. 8, is shown a cam, an oscillating sector arm, and a pinion, which mechanism is the means employed in the Walker Model-Room Machine, to cause the tucker plate 82 to oscillate about its fixed trunnions at pre-determined times. The work done by the said mechanism is of great simplicity, and is accomplished in a simple, direct, and efficient manner; differing in a marked degree both in method and result from the mechanism set forth in figure 3 of the middle column of said defendant's drawing, No. 8. It will, therefore, appear that the means employed in the Walker Model-Room Machine as set forth in figure 3 of the third column of said defendant's drawing, No. 8, performs a different function and in a

remarkably different way, from that of the mechanism in the Liddell patent, set forth in figure 3, of the middle column of said defendant's drawing No. 8.

Q. 52. Your testimony in respect of the construction and character of any machine of the defendant, the Continental Paper Bag Company, has thus far been confined to the Walker Model-Room Machine. But I now ask you to state the character of the self-opening square paper bag machines, which you examined in the factory of the Continental Paper Bag Company, in Rumford Falls, Maine, as stated in your answer to Q. 4; so far as those machines differed from the Walker Model-Room Machine. To this end please to state what were the sizes of those Rumford Falls self-opening square paper bag machines, and how many of those machines you saw of each type; specifying the sizes, by the sizes of the paper bags they were respectively adapted to make?

A. By consulting the memorandum which I made at the time of my examination of the machines at the factory of the Continental Paper Bag Company, in Rumford Falls; I note that there were four machines of one size, two of which were for making quarter pound bags, and two for making half-pound bags. There were four machines for making one pound, and one and one-half pound bags. Nine machines for making two-pound bags. Four machines for making three-pound bags. Eight machines for making four pound bags. And Seven machines for making five-pound bags. Machines for making six and seven pound bags. Ten machines for making eight and ten pound bags. Two machines for making twelve pound bags. Two machines for making fourteen and sixteen pound bags. And one machine for making twenty pound, twenty-five pound, thirty pound and thirty-five pound bags. There were fifty-seven self-opening square paper bag ma-

chines in all, at the Rumford Falls factory when I visited it in November, 1902.

Q. 53. Please to state how many of these fifty-seven machines, when you saw them in November, 1902, had the tucker plate frame 300, carrying the tucker plate 82, and the diagonally journalled side clips 62, of defendant's drawing, No. 11 ?

A. I do not remember the exact number of machines thus equipped ; but there were not more than three or four at most.

Q. 54. Now, please to show in some way, how the tucker plates and their side clips, were constructed and mounted on the others of the fifty-seven machines ; and make this showing, if convenient, by reference to the drawings of some patent in the record ?

A. The tucker plates and their side clips of most of the machines at the factory of the Continental Paper Bag Company, for making the self-opening square paper bags, were like, in general, that set forth in figures 18 and 19 of the Claussen & Mortson patent No. 635,090, but differed more or less in minor details of design and mode of operation.

Q. 55. Please to look at defendant's drawing No. 11, and at the two parts which are marked 500 thereon ; and state what those two parts are in the Walker Model-Room Machine ?

A. The parts marked 500 in the defendant's Drawing, No. 11, represent a pair of spring tables, forming parts of the tucker plate of the Walker Model-Room Machine; and their function is to so yiel,dunder the action of the bevel-edged side slips 62, when said clips press down upon them, to clamp the bag tube thereto ; as to hold positively in position said bag tube,and to compensate for any inequalities in said tube. Said spring tables 500, also are efficient to ease the general action of the tucker plate mechanism, in that they absorb the blows of the bevel-edged side clips

62, thereby giving a cushioning effect, instead of furnishing a non-yielding anvil as in the non-yielding solid forming plate of the Liddell patent.

Adjourned until Tuesday, January 20, 1903, at 11 o'clock A. M.

Tuesday, January 20, 1903, 11 o'clock A. M. Met pursuant to adjournment; counsel present as before.

Q. 56. Please to now closely examine again the third column of Defendant's Drawing, No. 9, and state whether it conforms in all respects to all of the fifty-seven self-opening square paper bag machines which you saw in the factory of the Continental Paper Bag Company, and also to the Walker Model-Room Machine; as far as the four figures of that column purport to represent the defendant's machine?

A. As far as the parts are shown in the third column of Defendant's Drawing, No. 9, the figures of that column conform to the fifty-seven machines and also to the Walker Model-Room Machine.

Q. 57. Now please to state precisely in what respect or respects Defendant's Drawing, No. 11, conforms, and in what respect or respects it differs from the fifty-seven self-opening square paper bag machines in the factory of the Continental Paper Bag Company, in Rumford Falls, Maine?

A. It conforms in all respects, except in respect to the tucker plate 82, and the appurtenances and operating mechanism thereof.

Q. 58. You have stated that a few of the fifty-seven machines at Rumford Falls conform also to the Walker Model-Room Machine in respect of the tucker plate 82, and the appurtenances and operating mechanism thereof. And I now ask you to give an account of the tucker plate on each of the others of those fifty-seven machines, by

stating what difference exists between those tucker plates and the tucker plate of the Walker Model-Room Machine?

A. The tucker-plate of the Walker Model-Room Machine is divided into sections numbered respectively 82 and 500,500; whereas, the tucker plates of the machines inquired of, have their tucker plates integral, of one piece, and are not divided into sections, as is the tucker plate of the Walker Model-Room Machine.

Q. 59. Now please to state what devices were used on the others of the fifty-seven machines, in place of the bevel-edged side clips 62 of the Walker Model-Room Machine, and please to explain, by reference to the Claussen & Mortson patent, or otherwise, how those devices were caused to operate in performing the function of entering the tucks of the paper tube, and holding the upper plys of those tucks against the tucker plate, while the tucker plate was turning upon its axis?

A. On the machines inquired about, the bevel-edged side nippers 103 and 104 of the Claussen & Mortson patent, No. 635,090, were used in the place of the bevel-edged side clips 62, 62, of the Walker Model-Room Machine. These bevel-edged side nippers are operated in the manner set forth in the Claussen & Mortson patent, which briefly is as follows:

Said bevel-edged side nippers 103 and 104 are pivoted on the sleeves on the tucker plate trunnions respectively, which sleeves are adapted and operated to move longitudinally of said trunnions and inwardly and outwardly as to the bag blank. Suitable springs 118 and 119, carried in said sleeves 107 and 108, operate to open and hold open at proper times, the bevel-edged side nippers 103 and 104. Said side nippers are closed upon the upper ply of the tucks of the bag blank respectively, by the arms on their outer ends respectively, engaging with the stops 116 and 117 respectively, of the tucker plate. This closing action

takes place as the bevel-edged side nippers are thrust inwardly into the path of the bag blank by the levers 110, 110, hung from the upper part of the main frame of the machine. In a portion of the machines referred to, these actuating levers conform in position and method of operation with those of the Claussen patent, No. 598,497, as shown at 87, 87, in figures 3 and 4 of that patent.

Q. 60. What difference, if any, exists among any of the self-opening square paper bag machines of the Continental Paper Bag Company, in respect of their relation, or want of relation, to the Liddell patent No. 558,969?

A. There is no such difference existing among any of those machines.

Q. 61. Now please to compare all the self-opening square paper bag machines of the Continental Paper Bag Company, including the Walker Model-Room Machine, and the fifty seven machines which you saw in the factory of that Company on the one hand, with the Liddell patent No. 558,969 on the other hand; and please to state and set forth a comprehensive summing up of that comparison?

A. All of the machines of the Continental Paper Bag Company specified in the question, including the Walker Model-Room Machine, have a rotating conveyer, oscillating carriers with side clips and front clips respectively, which have been fully described in connection with several of the defendant's drawings, and their sources of origin traced, and their mode of operation, and the co-relation of their movements fully set forth. It has also been shown that the construction and mode of operation of these parts are substantially different, in entirety and in detail, from the construction and mode of operation of the cylinder and its appurtenances of the Liddell patent. Furthermore, in connection with the said defendant's drawings, the construction of the oscillating tucker plate, having a front hook and working in connection with diagonal side fingers, of

the defendant's machines has been fully described, and their origin traced to their several sources, and the means for operating them, and for co-relating the movements of the said oscillating tucker plate, and said fingers and said nippers, fully set forth. Also, there is shown in defendant's drawing, No. 11, the means employed for co-relating the movements of the defendant's rotary conveyer, and oscillating carrier, and oscillating tucker plate, and it has been fully shown in connection with said Defendant's Drawing, No. 11, and the other Defendant's Drawings, referred to, that these means are substantially different in construction and operation, both as an entirety and in detail, from the Liddell connecting mechanism, for timing the movement of the Liddell rotating cylinder, and the Liddell forming plate. It will therefore be seen, that the defendant's rotary conveyor, oscillating carriers having side clips and front clips, respectively, oscillating tucker plate, having a front hook and working in connection with diagonal side nippers, and defendant's means for operating said tucker plate, and defendant's means for operating said nippers, and defendant's means for co-relating the movements of the rotary conveyor, oscillating carriers, and oscillating tucker plate, constitute a combination which is substantially different, as an entirety and in detail, and in construction, mode of operation, and merit, from the combination of claim 1, claim 2, or claim 7, of the Liddell patent, No. 558,969, and from the Liddell combination of all the elements in those three claims.

Q. 62. Please look at the drawing I now show, marked Defendant's Drawing No. 12, and state what it purports to represent?

A. Figures 1 and 2, of defendant's drawing, No. 12, represent the satchel-bottom paper bag, such as the patent, No. 222,464, to Cross, of December 9, 1879, and patent, No. 240,972, to Cross of May 3, 1881, and patent, No. 510,410, to Crowell of September 12, 1893, and patent

No. 543,571, to Crist of July 30, 1895, show machines designed to make. Figures 3 and 4 of defendant's drawing, No. 12, show a self-opening square paper bag, such as made by the defendant's machines, and substantially such as made by numerous machines in the prior art, beginning with the Leinbach, Wolle & Brunner patent, No. 242,661, of June 7, 1881.

Mr. Walker offers in evidence the drawing, specified in the last question and answer, and requests that it be marked, "Defendant's Drawing, No. 12, Charles E. Smith, Notary Public," and it is accordingly so marked.

Cross examination by Mr. Francis T. Chambers, Counsel for the Complainants:

X-Q. 63. Do I correctly understand, that your familiarity with paper bag machinery, such as it is, has been acquired by you since the early part of November, 1902, and with special reference to your testimony in this case?

A. My general knowledge of paper bag machinery began nearly twenty years ago; but I have made a special study of the subject, since the early part of November, 1902?

X-Q. 64. What did you have to do with the Leinbach, Wolle & Brunner machine, when you were with Pratt & Whitney?

A. I had nothing definitely to do with that machine, but saw more or less of it at different times.

X-Q. 65. But personally you were not concerned with this machine, or with how it operated, or with what was done with it?

A. I was not.

X-Q. 66. Have you ever seen any other operating bag machines, other than those of the Continental Paper Bag Company?

A. I have. The only other ones that I have seen in

operation, were the early ones of the Lorenz & Honiss design.

X-Q. 67. Where did you see those, and what, if anything, did you have to do with them?

A. I saw the first machine built by Lorenz & Honiss under their patent, No. 331,722, at the factory of the Pratt & Whitney Company in Hartford, Connecticut, in 1884. As a mechanical engineer, I was much interested in its construction, mode of operation and product, and examined it both in operation and when it was idle. Later I saw other machines, made under various patents of Lorenz & Honiss, but I am not at this time able to identify them mentally in detail.

X-Q. 68. I understand that, other than a casual professional interest, you had nothing to do with the construction and operation of those machines. Is that correct?

A. Yes.

X-Q. 69. And I understand also, that the forming and deliverance of your opinions in this suit, has been your first active connection with the paper bag making business. Is that right?

A. Your understanding is in the main, correct; but I have had considerable experience in the designing and constructing of paper handling machinery of analogous types, particularly in machinery for making paper envelopes.

X-Q. 70. Prior to beginning your deposition in this case, how much time did you spend here in Mr. Walker's office, in association with Mr. Walker, and with the machine in Mr. Walker's Model-Room?

A. Prior to my deposition in this case, I spent but a few hours with Mr. Walker; but six weeks or more with the machine. That is to say, in the room with it.

X-Q. 71. You have produced a considerable number of drawings in your deposition, many of them of what I may call an argumentative kind. Were these drawings

originated by you, or were they submitted to you by some one else?

A. If you mean by "originated" made, I did not orginate any of them. But directed of my own volition the making of a portion of them. Others were made without my direction, and submitted to me.

Adjourned until Wednesday, January 21, 1903, at 11 o'clock A. M.

Wednesday, January 21, 1903, 11 o'clock A. M. Met pursuant to adjournment; counsel present as before.

X-Q. 72. Did the conception of these drawings originate with you, or was it suggested to you by others?

A. Their conception originated with me.

X-Q. 73. What is the nature of your employment with Mr. Francis H. Richards? I mean what kind of work are you in the habit of doing in that establishment?

A. My work in the office of Francis H. Richards is of a varied character, chiefly executive. It further embraces supervision of the designing of mechanisms and machines, as outlined by Mr. Richards or by our clients, or by both. Also the preparing and writing of accurate descriptions of mechanisms and inventions, for record and patent use; also for the use of the draftsmen and others in drawing and building various structures.

X-Q. 74. If I understand you correctly, your work is largely of an inventive character; is that correct?

A. No, I do not consider that my work is in this field; but rather in the adjacent field of developing the inventions of others, and putting them in practical and commercial condition.

X-Q. 75. And when doing work of this kind, whatever original or inventive thoughts you put into the development of such machines, you are accustomed to credit to the clients. Is that the case?

A. Not exactly. Most of the work I have in hand is proceeded with in consultation with Mr. Richards and with our several clients; and the originating and inventing I have left to them, while I exercise the engineering skill necessary to carry out, in as practical a way as is consistent with their work, the matters in hand.

X-Q. 76. That is, if I understand you, it is the understood condition of your employment, that either Mr. Richards or the individual client appears as the inventor and patentee, and takes the credit of any originative work which you may have done on the job? Don't understand me as criticising this in any way; it is, I believe, perfectly proper. I am only trying to fix the general nature of your employment, and the nature and customs of Mr. Richards' concern.

A. There is no understanding to this effect, of which I am aware. I am not an inventor. There has never been a patent issued in my name in this country or any other, to the best of my knowledge and belief. It consumes all of the time and energy I have at my disposal, to put the ideas that others have originated, into practical shape.

X-Q. 77. In view of your origination of the so-called "Modified Crist 543,571" designs, of the middle column of Defendant's Drawing, No. 7, and of the so-called "Modified L. & C. 534,512" designs, of Defendant's Drawing, No. 6; I think you are too modest in disclaiming the qualities of an inventor. But we will pass this; and refer to the subject matter of your answer to Q. 11, which relates to the Liddell patent in suit; and in which you say that a machine built in accordance with that patent would be "inefficient" to properly produce a perfectly formed square bottom paper bag, for six specified reasons; the first of these reasons being what you refer to as an improper profile, illustrated in the drawings of the cams K and K', and improper ratio between the gears M' and N. But I will ask you in the first place, if you have yourself de-

termined as a fact, that the path of the edge W, of the former plate E, would be as represented in Defendant's Drawing, No. 10, to which you refer in your answer?

A. I have personally traced through the operation of the mechanism set forth in Defendant's Drawing, No. 10, in sufficient detail to convince myself that the path of the point W, as set forth in said drawing, is substantially correct.

X-Q. 78. Had you done this at the time you gave your answer to Q. 11?

A. It was done prior to that time.

X-Q. 79. How long did you take to ascertain that fact?

A. I went over the matter in detail at several different times, and studied the action of the parts, very carefully; but I am unable to say just how much time I expended on it. I should say that it was in the neighborhood of one hour.

X-Q. 80. Did you go over this with Mr. King or anyone else; or did you avail yourself of mechanical or other appliances, such as Mr. King appears to have utilized, in getting up Defendant's Drawing, No. 10?

A. I utilized various mechanical means in the study of this drawing; and also spent some time over it in connection with Mr. King.

X-Q. 81. Did the idea of making the alleged variation of the cams of the Liddell patent, from their true outline, the basis of criticism of the patent, originate with you, or was it suggested to you by others?

Mr. Walker objects to this question, as misleading, or at least ambiguous enough to make it practically misleading.

A. I don't understand the question, as put.

X-Q. 82. What I want to know, is whether the idea of making the alleged malformation of the cams, the basis of an attack upon the operativeness of the Liddell machine, was your own idea, or whether you were simply following

someone's else suggestion when you gave color to this idea in your deposition?

Mr. Walker objects to this question as being out of conformity with the testimony which it assumes to represent; that testimony consisting simply in saying that the cams K and K′ are not of the proper profile to impart through the arm F, and the train of gears M′, M, M, and N, the proper movement to the edge W, of the former plate E; and Mr. Walker suggests to complainant's counsel that he ask the witness whether he discovered this fact originally, by examining the Liddell patent, on the one hand; or whether, on the other hand, some person called his attention to the fact, before he had himself examined the Liddell patent upon the point.

Complainant's counsel requests Mr. Walker to refrain, as far as in him lies, from interference with this cross examination.

A. I did not discover the interferences set forth in Defendant's Drawing, No. 10; as that drawing was submitted to me before I had entirely completed my investigations of the Liddell patent.

X-Q. 83. Do you think if this idea had not been suggested to you, that you would ever, of your own instance, have originated the idea of making the alleged departure of the cams in the Liddell drawings from true outline, the basis of an attack upon the operativeness of the patent in suit?

A. Most decidedly, yes, as I finally analyzed the patent and its mechanisms, to the best of my ability, to bring out all the points of those mechanisms; and if some one else had not made this investigation, I would have done so.

X-Q. 84. Yet you know perfectly well, do you not, that there would not be the least practical difficulty in providing a machine, constructed in accordance with the Liddell

patent, with proper cams to impart the desired and described movements to the plate E?

A. According to my knowledge and experience, it would involve considerable difficulty, and consume considerable time, to so provide the Liddell machine; and furthermore, I seriously question as to whether it is possible to make cams that would be operable for that purpose.

X-Q. 85. I don't know what you may have in view in making your last answer; but the point which I have had particularly in view, has been the matter of the outline of the cams. Am I to understand that you think it would be a matter of much, or any, practical difficulty, to provide cams in the Liddell machine, which would have the proper outline, to give the desired movements to the plate E?

Mr. Walker objects to this question as being a substantial repetition of X-Q. 84, which question was answered responsively, fully and positively; and Mr. Walker suggests to complainant's counsel, that he pass to some other point, because the defendant's time for taking testimony is so limited that none of it ought to be wasted by repeating any question which has been fully answered. And Mr. Walker states to complainant's counsel that this witness has been produced for cross examination, and not for the purpose of enabling complainant's counsel to insert in the record his own views of the questions involved, or to attempt to convince the witness that the witness is in error in his testimony.

Complainant's counsel suggests to Mr. Walker that if he will be less interruptive, a great deal of time will be saved; and to avoid misleading Mr. Walker in thinking that he can, by interruptions, or otherwise, regulate the course of this cross examination, counsel further states that he does not desire any instructions from Mr. Walker

as to how he shall cross examine this witness, and intends to cross examine absolutely in his own way, and as briefly as Mr. Walker will make it possible for him to do.

Mr. Walker calls the attention of the Court to the fact that twenty-three cross questions have thus far been put to this witness, and that Mr. Walker has not interrupted the cross examination in any way, except in objecting to three of those twenty-three questions, and in suggesting, as he had a right to do, to complainant's counsel the ground of the objections interposed, and in suggesting how the examination might be conducted in an unobjectionable way. Mr. Walker notifies Mr. Chambers that he will not be permitted to cross examine this witnesss absolutely in his own way, unless that way conforms to the law of evidence; because there are means known to that law, which are invokable against outrageous abuses of the right of cross-examination.

A. I believe I understood your X-Q. 84, and in answering X-Q. 85, I have nothing to add to my former answer, that, I think, would make it any fuller or clearer.

X-Q. 86. It would then, in your opinion, be a matter of considerable practical difficulty to devise cam outlines which would give those desired movements? I want a categorical answer to this question, if you can give me one.

A. I believe it would.

X-Q. 87. Do you think it would require anything more than the intelligence of a skilled mechanic to provide the correct cam outlines for this Liddell machine?

A. While it might be possible for a skilled mechanic to lay out a theoretic cam outline, or outlines, for the purpose set forth in the Liddell patent; I believe that outline, or outlines, would be physically impracticable, if not inoperable.

X-Q. 88. Please explain the reason which leads to your conclusion, as expressed in your last answer?

A. The reason of the conclusion expressed in my last

answer, is that I believe that the profile of either one or both of the cams mentioned, would have such abrupt or sharp depressions in their peripheries, as to fail to co-act with the parts provided therefor.

X-Q. 89. Have you ever undertaken to design or construct a model or machine which would be operative, in accordance with the general operative conception of the Liddell patent?

A. I have not.

X-Q. 90. Have you ever attempted to lay out cams for the Liddell machine, which would be what you refer to in answer to X-Q. 87, as theoretically, of the outline or outlines, for the purpose set forth in the Liddell patent?

A. I have not.

X-Q. 91. Then in questioning the operativeness of the theoretically operated cams, you have in your mind no very clear idea as to what the outline of those cams would be, is it not so?

A. From investigations of the patent, and in connection therewith, I have formed a fairly clear idea in my mind, as to the nature of a portion of the periphery of those cams.

X-Q. 92. Could you, so that we may get on common ground, indicate by a sketch about what the outlines of the theoretically operated cams would be, as they present themselves to you?

A. I think I can explain by means of the drawings, of the Liddell patent, and without making special sketches, the points I have in mind. These points refer particularly to the cam, K′, and my belief, based on investigation referred to, is that the depression near the letter K, in figure 1, and the depression with which the horn of the arm F′, is engaged, in figure 1, of that patent, would be so deep and sharp-sided, that the arm F′ would be unable to lift out of them, after having entered either one of them, and would therefore, be inoperative. As to the cam K, I be-

1206

lieve that the rise shown near F′, in figure 1, of the patent, would be so steep as to be ineffective to operate the plunger k.

X-Q. 93. Do I understand correctly, that you not only think these difficulties would occur in framing theoretically operative cams, but that the ordinary skill of the trained mechanic would be insufficient to overcome them?

A. As I stated, I believe that it would be possible for a good mechanic to make cams with these theoretic outlines; but that it would be necessary for him to depart from these theoretic outlines, to make a mechanism that would work; and in departing from said theoretic outlines, he would fail to accomplish the result sought.

X-Q. 94. If I correctly understand your last answer, it is equivalent to the answer, Yes, to my question X-Q. 93. Is that right?

Mr. Walker objects to this question as an absurd attempt to confuse, what the witness has made perfectly plain.

A. You are substantially correct in your understanding.

X-Q. 95. In pointing out the different reasons for the supposed inefficiency in the Liddell machine, in your answer to Q. 11, you mentioned in the first of your scheduled particulars, not only the lack of proper outline in the cams, but some defect in what you refer to as the ratio of the gears M′ and N. Will you please explain what you conceive this defect to be?

A. The defect referred to, in the ratio of the gears M′ and N, is that the gear N, is too large in relation to M′, to enable the point W, of the tucker plate E, to traverse the path which it is stated in the Liddell patent, to traverse, by means of the cams K and K′, and their appurtenances.

X-Q. 96. Do you mean that, without changing the ratio of the gears M′ and N, no cams could be provided in the

place of the cams K and K′, which would give to the plate E, the desired motion?

A. I believe that no cams which were practicable, could be so provided.

X-Q. 97. And this, for the reason set out in answer to X-Qs. 93 and 94?

Mr. Walker objects to this question, as ambiguous and confusing; the reasons stated in answers to X-Q. 93 and X-Q. 94, appearing on their face to be applicable only to the outlines of the cams, and not appearing on their face to have any relevancy, to the proportions of the gears. Mr. Chambers is invited to notice that in answer to X-Q. 96, the witness expressed a particular opinion, and Mr. Chambers is invited to ask him plainly, his reasons for that opinion, and not try to mix the matter up with another subject. And Mr. Walker instructs the witness to give his reasons for his answer to X-Q. 96, entirely independent of his answers to X-Q. 93 and X-Q. 94. And Mr. Walker submits to the Court, that this instruction is fully justified by the confusing way in which complainant's counsel is conducting this cross-examination.

Complainant's counsel protests against the absolutely inexcusable intention of Mr. Walker in the cross-examination of this witness, and against the effort which Mr. Walker seems to have persistently in view to lead the witness, and to imbue him with the idea that cross-examining counsel is in some way endeavoring to mislead or trick him. Plaintiff's counsel believes that the absolute good faith of this cross-examination is apparent on its face, and further believes that the witness is disposed to be frank and explicit in his answers, and will answer as to properly inform counsel and the court as to his views and reasons, if he is permitted by Mr. Walker to do so.

A. The reason for my belief that no cams which were practicable, could be provided without change in the ratio

of the gears, M′ and N, is deduced from a careful and exhaustive study of the requirements.

X-Q. 98. If I correctly understand you, the only reasons for the impracticability of the cams are those you have explained in X-Qs. 93 and 94? My understanding is that the theoretical cams to which those questions related, were assumed by you on the basis of the other assumption, that the ratio of the gears M′ and N, should remain as shown in the patent drawings? And I therefore understand that the impracticability of preserving the ratio between these gears, reduces itself to the same single defect already pointed out in connection with the cams? Am I, or am I not correct in so understanding?

Mr. Walker objects to this question because it is complex and confused, and because much of it has no foundation whatever, in anything that the witness has said; and the witness is advised that he should not undertake to answer the question, unless he is perfectly sure that he understands its significance in every respect.

A. I fail to find any reason stated in my answer to X-Qs. 93 and 94, as to the impracticability of the cams mentioned. My explanations as to the impracticability of the theoretical cams, needed to cause the presser-plate of the Liddell machine to perform its functions, as set forth in that patent, were based upon the balance of the machine being as shown in the drawings of that patent. As to the last part of your question, your understanding is incorrect.

X-Q. 99. What, if any other, defect in the Liddell machine, would be due to preserving the gear ratio shown in the drawings of the patent, other than the defective cam forms, which you have explained?

This question is objected to as ambiguous and confusing, and as misrepresenting the testimony which the witness has given; and Mr. Walker suggests to Mr. Chambers that he should plainly ask the witness to state what evil

results in the Liddell scheme, from giving the same diameter to the gears M′ and N, and should refrain from confusing that point with other matters, and thus reducing the cross examination to a succession of verbal traps set with great deliberation, for the purpose, if possible, of leading the witness into some error.

Plaintiff's counsel submits to the Court, that Mr. Walker's course, in connection with this examination, is a virtual denial of the right to cross examine, and absolutely without color of justification, and only explicable on the assumption, either that he distrusts the capacity of this witness, or is unwilling to have his witness testify to facts.

Mr. Walker states to the Court that he understands this to be the first expert deposition of any length that the witness ever gave ; and Mr. Walker states that he himself defended, from 1887 to 1895, another paper bag suit which was prosecuted by complainant's counsel, Mr. Chambers, during all those years, and that that experience of eight years made Mr. Walker fairly acquainted with the methods pursued by Mr. Chambers in cross-examining witnesses, and that those methods are the most astute and cunning, which Mr. Walker has encountered during twenty-five years, practicing patent law. For these reasons, Mr. Walker does distrust the capacity of this witness to infallibly detect all the traps which Mr. Chambers may lay for him, though he has full confidence in the capacity of this witness, to fully and fairly answer every fair question that is put to him on cross-examination, and Mr. Walker is not only willing, but desirous, that the witness shall testify to every fact involved in this suit, as far as that fact is known to the witness.

Mr. Chambers has no desire to inject personalities into this record, but simply submits to the court, the great impropriety of Mr. Walker's above statement made in the hearing of the witness.

A. There would be no other important defect than that mentioned in the question.

X-Q. 100. Would it be practicable, in your opinion, by changing the proportions of the gears M′ and N, to overcome the difficulty, which you think would exist in the cam outlines, if the gears were maintained in their illustrated ratio?

A. I do not understand what you mean by "illustrated ratio."

Mr. Chambers states that by "illustrated ratio," he refers to that illustrated in the patent.

Mr. Walker asks Mr. Chambers to explain whether "the cam outlines" referred to in the question, are the cam outlines shown in figure 1 of the Liddell patent, or are the theoretical cam outlines which the witness has stated might be substituted for those shown in figure 1 of the patent, though they would be too steep, in his judgment, to be operable.

Mr. Chambers states that he has reference, and thinks his question is perfectly clear on that point, to what the witness has referred to, as the theoretical cam outlines.

A. A change in the ratio of the gears M′ and N would not be sufficient to entirely obviate the difficulties in the theoretic outlines of the cams K and K′.

X-Q. 102. The effect of reducing the diameter of the gear N as compared with that of the gear M′, would be to reduce the eccentricity of the cam K, would it not?

Objected to as ambiguous and confusing, it not being apparent how a change in the gears would operate to produce a change in the cam, and it being apparent that merely to change the diameter of the gear N, would not have any effect upon the character of the cam K, although it might enable the cam K, to be altered.

Plaintiff's counsel again protests against Mr. Walker's unjustifiable interruptions, and more especially against Mr. Walker's attempt to give evidence for which he has

not been qualified in the case. Mr. Chambers is cross-examining this witness, or rather trying to do so, on the assumption that he is a thoroughly skilled mechanic and engineer who has made, perhaps, some mistakes in his direct examination. It is important to show on what lines the witness' mind has worked, and what conditions he has considered in arriving at the conclusions stated by him, as to the mechanical defects of the Liddell machine. And if Mr. Walker will cease to imagine things, with regard to the underlying motives of the cross examination, complainant's counsel believes that the witness, if left to himself, would make his position perfectly clear and understandable. If there is anything in any of Mr. Chambers' questions which the witness does not fully understand, Mr. Chambers now says to the witness that he desires him to make sure that his answers shall not be misdirected, either by inquiring as to counsel's meaning, or by inserting in his answer, a statement as to his understanding of the question, in either or both ways, preventing any possible misapplication of such answer as he may give.

A. Other parts of the machine, remaining as they are; some measure of such reduction in eccentricity of the cam K′ would result from the reduction of the size of the gear N, in relation to the size of the gear M′.

X-Q. 103. But, if I correctly understand you, you do not think that this reduction in eccentricity would be sufficient to overcome the defect in the construction of the cam K, which you have pointed out—namely, that its point would be unduly sharp?

A. The inter-relations between the cams, arms and gears provided for the operation of the Liddell forming plate, are so dependent upon one another, that it is difficult, and in some cases impossible, to answer abstract questions as to pairs of co-acting elements therein. X-Q. 103 is a question of this nature.

X-Q. 104. Would you consider the matter of varying

the gear ratio of the Liddell machine as one which would involve anything more than mechanical skill and judgment?

A. Will complainant's counsel please state what object he has in view in such variation.

Complainant's counsel states that he personally has no particular object in view, but simply wants the witness' judgment as to whether it would involve more than mechanical skill and judgment to vary the gear ratio, with, of course, proper and corresponding variation in the theoretical cam arms; or, in other words, whether, if we assume that some one or more difficulties with regard to cam outlines would be incident to the gear ratio shown in the patent, it would not be a simple and obvious solution of such difficulty to change the gear ratio, and make corresponding changes in the cam outlines.

Adjourned until Thursday, January 22, 1903, at 11 o'clock A. M.

Thursday, January 22, 1903, 11 o'clock A. M. Met pursuant to adjournment; counsel present, as before.

The witness proceeds to answer X-Q. 104, as follows:

A. It would be obvious to a mechanic skilled in the art, who had made a proper study of this problem, that a change in the gear ratio, and that changes in the cam profiles, would be necessary to cause the forming plate of the Liddell machine, to perform its functions as set forth in the Liddell patent; but it would be neither simple nor obvious, as to what the ratio of the gears should be, or as to what the profiles of the cams should be, to attain this result. Furthermore, changes in the gear ratio and cam outlines would probably involve changes in other parts of the mechanism, to enable said gears and cams to perform their desired functions.

X-Q. 105. Assuming that the movements of the oscil-

lating plate E, of the Liddell machine, with relation to the conveyer, in connection with which this plate operates to open the diamond fold, are settled and determined upon; and assuming also, that it is determined to use cams, one to operate the oscillating arm F, and another to oscillate the plate E, pivoted on the end of the arm F, and through a train of gears journaled on the said arm F; would it or would it not be, in your judgment, an ordinary skilled mechanic's job to determine the ratio of the gears, and the conformation of the cams?

A. In my judgment, it would be beyond the skill of an ordinary skilled mechanic to proportion the ratio of the gears, and to lay out the profiles of the cams, in such manner as to cause the forming plate of the Liddell patent, to travel as set forth in that patent. It would require the ability of a better man.

X Q. 106. Could you do it?

A. I believe I could, if allowed to make such other changes in the mechanism, as the specified changes would probably involve.

X-Q. 107. Let us try to get our minds on the same proposition. I have specified no changes. I have simply put before you a hypothetical proposition, which is in substance, whether a skilled mechanic left untrammeled as to the gear ratio and cam outlines, but given the relative movements of the carrier and oscillating plate, would be able to provide gears of such ratio, and cams of such outlines, as would cause the plate to make the determined movements; and you have replied that it would take a better man than the ordinary skilled mechanic to do this. Does this answer still stand in view of my explanation of my question?

A. It does.

X-Q. 108. You have referred to other changes which might be made necessary, in providing, as you think you could do, proper cams and proper gears. What did you

1914

have in mind, as probably necessary in the way of such other changes?

The question is objected to as immaterial; because the witness has testified that the necessary changes would be outside the ability of an ordinary skilled mechanic; and because it is not the duty of the witness, to furnish the complainant with the fruits of invention, or of extraordinary expert ability, in the work of so altering the mechanism of the Liddell patent, as to make it operative; and because this case stands on the Liddell patent, and cannot be bolstered up, by proving how an abler man than Mr. Liddell, could make a machine succeed, which was a failure as it was contrived by Mr. Liddell.

Plaintiff's counsel proposes to argue this case at the proper time. They also propose to show by this witness, as far as he is able to explain himself, and as far as he is permitted by defendant's counsel to testify, what ground he has for impeaching the operative utility of the Liddell patent. The present question is one simply seeking an explanation from the witness of an assertion made in his answer, and is so obviously proper, that the interruption to the cross examination, by the rambling and inconsequent so-called objection, is absolutely inexcusable, and simply another evidence of what appears to be the policy of defendant's counsel; namely; that of practically preventing the orderly and decent cross examination of this witness, by what in congressional practice, is known as filibustering. Plaintiff's counsel recognize that they are practically helpless under these tactics, and propose to save as much time as possible by ignoring the interruptions of defendant's counsel, no matter how unjustifiable and irritating they may be; but they desire now to respectfully submit to the court, that these tactics should weigh, and weigh very heavily, against the acceptance of this witness' deposition, or any confidence being placed in his expressions of opinion.

Mr. Walker calls the attention of the court to the fact that he has objected to less than one-quarter of the questions which have been put on cross examination, and Mr. Walker submits to the court that the objections interposed, were all well taken, and that a much larger number of objections might properly have been made, than have been made thus far in the cross examination of this witness; and Mr. Walker suggests that it was unprofessional for plaintiff's counsel to insert in the record such statements as those contained in this deposition in response to the objection to X-Q. 82, and in response to the objection to X-Q. 85, and in response to the objection to X-Q. 97, and in response to the objection to X-Q. 99, and in response to the objection to X-Q. 102, and in response to the objection to X-Q. 108; and Mr. Walker notifies complainant' counsel that no amount of misrepresentation and abuse inserted by complainant's counsel in the record, will divert Mr. Walker from interposing proper objections at proper times, to improper questions.

A. The other changes to which I referred, were: that in the ratio of the arms, F and F′, set forth in my answer to Q. 11; and to change in the shape of one or both of those arms, particularly.

X-Q. 109. Do you mean that with full liberty to change the cam outlines, and of the gear ratios, it would still be necessary to change the shape of the arms F and F′?

A. It would at least be necessary to change the shape of one of them.

X-Q. 110. Which and why?

A. The arm F′. Because it is impossible for the horn of said arm to follow the profile of the cam K′, as shown in the Liddell patent; and changes would be necessary in said arm, to enable it to co-act with a properly designed cam.

X-Q. 111. Do you not think, Mr. Stone, that it is a

1216

rather frivolous objection to the operativeness of the Liddell machine, to raise any question based on the shape of this arm F′, because even if it is true that some change in shape would prove to be necessary, when what you think would be a proper cam were supplied ; would it not be the most simple and obvious thing in the world, to make a proper change in the shape of this arm ?

A. I do not consider it frivolous, as the change involves a change in the ratios of the arms, F and F′, which should be considered conjointly with the cam profiles, and involves a dual problem; nor would the change in the arm be simple and obvious. It is considered a well-nigh inexcusable blunder in a mechanical engineer to design machinery in which there are marked interferences, and it should have been within the ability of an ordinary draftsman, to have avoided the interference between the cam K′ and the arm provided to co-act therewith, as shown in the drawings of the Liddell patent.

X-Q. 112. Your answer seems to me to embody a marked contradiction. You say it would not be a simple and obvious matter, to so alter the arm F′ as to avoid interference; and yet it would be an inexcusable blunder for a draftsman to so form the arm as to interfere. If the latter of your assertions is true, would it not be what might fairly be called a simple and obvious matter to make such change in the shape of the arm, as might prove to be necessary ?

Objected to as misleading to the court, in that it plainly misrepresents the answer to X-Q. 111.

A. I did not make either of the statements that you attribute to me in your X-Q. 112; nor do I consider that my answer to X-Q. 111, is in any way contradictory, either in itself, or to any previous answers that I have made.

X-Q. 113. I infer from your answers, with regard to the arms F and F′, that you have found, or have in some way satisfied yourself, that the cam K′ in its rotation, would at

some point or points, strike against the shaft of the arm F′, so that the cam contacting point would be lifted from contact with the cam. Am I correct in so understanding?

A. That is the interference to which I referred in the last part of my answer to X-Q. 111; and I have earlier referred to that interference as a minor matter, constructively, and that it would have been within the ability of an ordinary draftsman to have avoided it; and would have been within the ability of an ordinary skilled mechanic to have corrected it.

X-Q. 114. And is it not also true, that to find this defect in the Liddell drawings, you have to assume that the shank of the arm F′, was in the same plane with its cams-contacting point, and with the cam, although the patent drawings are not such as to make this a necessary conclusion?

A. I consider that there was nothing assumed in this matter, and that the patent drawings plainly set forth such construction. I have made a good many patent drawings, and a great many engineering drawings, and have laid out a good many hundred intricate cams with their co-acting arms, and I feel quite competent to read drawings of such devices.

X-Q. 115. The drawings of the patent are compatible with a construction in which the cam contacting point of the arm F′ is not in the same plane with the shank of that arm, are they not?

A. They are compatible with this construction, but do not show it.

X-Q. 116. And if this construction, which as you state, is compatible with the drawings, were employed, interference between the cam shank and the cam, could be avoided, on any hypothesis as to the shape of the cam, is it not so?

A. That is quite true.

X-Q. 117. Referring now to the second numbered section of your answer to Q. 11, in which you note that the

1218

patent drawings do not show any means for holding the cam roll secured to the plunger K, in contact with the cam K, and note certain disastrous defects in the operation of the machine which would result from the absence of such means, I would like to ask you if it is not perfectly obvious to anyone having competent mechanical skill, that some means for keeping the cam roll and cam in contact, must be provided ?

A. It would be obvious to a skilled mechanic that some means should be provided for holding the roll, and the plunger k, against its co-acting cam ; and while it would be within his skill to apply the necessary means, it would not be obvious just how or where to apply those means ; or what specific means to use ; but it would be quite within his ability to both devise and apply such means.

X-Q. 116½. Referring now to the third numbered section in your answer to Q. 11, in which you refer to an improper interference between the arm H2 of the Liddell patent, and the cam I, I will ask you first, assuming that such an interference exists, whether it would not be easily within the skill of a mechanic to provide a cam which would perform the function of the cam I, and would not improperly interfere with the arm H2 ?

A. It would not be easily within the skill of a mechanic to provide such a cam ; but on the contrary, would involve some difficulty.

X-Q. 117½. Of course we might differ very much as to the meaning of "easily" as used in the last question and answer ; and I will therefore ask you to state whether or not the provision of a cam, which would perform the functions of the cam I, in the Liddell machine, would require anything more than mechanical skill and judgment ?

A. After some consideration, I do not have in mind a cam that, substituted for the cam I, in the Liddell patent, would perform the functions of said cam I, and yet not interfere with the return movement of the arm H2. I there

fore believe that it would require considerable mechanical skill and judgment to provide such a cam.

X-Q. 118. (Question repeated.)

A. I would further state, in answer to the repeated question, that I would believe it would not require anything more than mechanical skill and judgment.

X-Q. 119. In the third numbered section of your answer to Q. 11, besides criticising the shape of the cam I, you state that no adequate means are shown for returning the plate E to its receiving position. Is this because of the lack of illustration of some means to keep the cam roller k in contact with its cam, or have you any other assumed defect of the machine in mind?

A. I had in mind the inability of the mechanism to return the forming plate to its original position, after arm H2 had collided with the end of the cam I, shown near the indicator character F, in figure 2.

X-Q. 120. Then with the provision of a properly formed cam, this defect would be eliminated?

A. If I understand you to mean by a "properly formed cam" to refer only to the working profile of that cam, I cannot conceive of such a cam.

X-Q. 121. You have admitted that it is within mechanical skill to avoid the defect with regard to the operation of the cam I and arm H2, which you think would exist in the illustrated construction; and by a properly formed cam, I mean a cam in which this assumed defect in construction has been overcome. Please answer my question with that understanding?

A. It would.

X-Q. 122. Referring now to the fourth numbered section in your answer to Q. 11, in which you criticise the use of gears on the arm F, of Liddell's machine, as illustrated in his patent drawings, I understand that you have no doubt that such gears as are illustrated, could be used to

transmit the proper motions to the plate E? Am I correct in so understanding you?

A. You are not. I have stated at length, in answer to a number of questions, that the ratio of these gears was not suitable to transmit the proper motion to the Liddell forming plate.

X-Q. 123. What you say now, has relation to the composite question of gears and cams. But what you say in the part of your answer to Q. 11, to which I am now referring, has relation, I think, simply to the question of the gear train, apart from the instrumentality used to impart motion to the train. I have understood you as, in effect, expressing the opinion, that the gear train is a practicable means for imparting the desired motion to the plate E, though not, you think, by any means, the best means. Is that correct?

A. Your understanding is not correct, in that in the answer referred to, I did not state that the gears would operate or probably operate to transmit the proper motion; but simply stated that they would probably operate to transmit motion.

X-Q. 124. This is a little outside of the line I am trying to follow, but do you mean, Mr. Stone, to seriously take the position that it is impossible to transmit proper motion to the plate E, through the gear train, shown in connection with the arm F, and entirely aside from the question as to what means should be employed to impart motion to the gears, and through them to the plate?

A. Not at all. The only position that I meant to take in the matter was that the question, as put, did not quote my testimony as given. The gear train referred to, would doubtless be able to transmit the proper motion to the plate E.

X-Q. 125. Modern gear-cutting makes it quite practicable to avoid such back-lash as would make it imprac-

ticable for such a train of gears to impart the proper motion to the plate?

A. Undoubtedly, when such gears were new.

X-Q. 126. In the part of your answer to Q. 11, to which I am now referring, you note the presence in Liddell's machine, as shown in his patent drawings, of the eyes E^7, and horns A', constituting a device which would, to some extent at least, compensate the back-lash, if it existed, or was developed by the use of the machine; and you state that if the machine were properly designed, such compensatory appliances would be unnecessary. I should understand, from this, that you had in mind the use of other devices than the gear train illustrated in the patent, to impart the proper motion to the plate E, and that you thought such other devices to be superior to the gear train, for this purpose. Am I correct in so understanding?

A. You are.

X-Q. 127. As a matter of fact, it is within mechanical skill and judgment, to provide many means for communicating proper motion to the plate E, pivoted on an oscillating arm, such as F, is it not so?

A. I do not consider that there are "many" means for transmitting such motion in a practical manner. There might be a good many means that would be theoretically operative, however.

X-Q. 128. And the selection of the best of such means, would be merely a matter of good mechanical judgment, would it not?

A. It would be a matter of high mechanical judgment.

X-Q. 129. If that is the case, I suppose you have in mind some two or more such appliances, as to which a nice question of discrimination would arise? Is that right?

A. I have in mind one or or two partially developed

schemes, but have not given them sufficient consideration to warrant me in stating that they were even good.

X-Q. 130. Referring to the fifth numbered section of your answer to Q. 11, wherein you criticise the deficiency of the hook E′, as shown in the drawings of Liddell's patent; is it not true that even assuming the defects of the illustrated construction to be as pointed out by you, that it would be the merest matter of mechanical skill, to give to this hook or finger, such shape and proportion, as would make it quite sure that the bag would not slip off the hook, during the formation of the diamond?

A. I would not so characterize it. If it would have been "the merest matter" to have so done, I am quite at a loss to understand why the inventor of the Liddell patent did not so do; and while there were much better front hooks to be found in the prior art, which he was free to use, it would have taken more or less investigation and judgment to select a desirable one.

X-Q. 131. Am I correct in understanding that in expressing the opinion that the hook E′ shown in the patent, is too short to retain its hold on the paper, you were testifying from mere inspection of the drawings, without having experimented to definitely ascertain that this finger is inefficient to hold the paper in a machine such as Liddell illustrated?

A. My opinion is based both on inspection of the drawings of the Liddell patent, and on inspection and experimenting with other hooks for this purpose, as on the Walker Model-Room Machine, and on machines in the defendant's factory at Rumford Falls, Maine.

X-Q. 132. You tried some short hooks on these defendant's machines?

A. I did.

X-Q. 133. And these short hooks on the defendant's operating plate, did not keep their hold on the paper? Is that right?

A. Not with accuracy and continuity.

X-Q. 134. That is, if I understand, sometimes they would, and sometimes they would not?

A. That is right.

X-Q. 135. And the conditions with regard to the oscillating plate machine of the Liddell patent, and the oscillating plate machines which the defendant is using, are sufficiently the same to enable you to judge from the behavior of the hooks in defendant's machines, how similar hooks in the Liddell machine would behave?

A. Their actions in relation to the action of the front hooks are similar enough to enable me to judge of such front hook action.

X-Q. 136. Do you realize, Mr. Stone, that the holding power of the hooks, or rather the liability of the paper to slip from under them, would vary very much with the character of the paper used?

A. Undoubtedly.

X-Q. 137. And you know enough of the art, do you not, to realize that while a short hook might efficiently hold the end of a tube made of heavy stiff paper, such for instance as are employed for large flour sacks, a longer hook would obviously be necessary where the paper employed was of a light, flimsy and flexible character?

A. I believe that a short hook could not properly hold either heavy or thin paper, as, while in the case of the heavy paper, the stiffness thereof would tend to enable the hook to hold it easier than as if it were soft and flimsy; on the other hand, the power required to fold such heavy paper would be a strong factor in dragging the paper out from under the hook.

X-Q. 138. Do you mean to be understood as asserting that the heavy paper would require just as long a hook as the thin paper?

A. I do not. But I think it would be desirable.

X-Q. 139. Assuming that you are right in saying that

the hook in Liddell's patent is unduly short, is it seriously your opinion that anyone skilled in the art of paper bag machine construction, would be misled by the drawings of the patent, and would, in constructing a machine in general accordance with the patent, put in a hook or finger which was too short?

A. I would not expect a man skilled in the art of paper bag machinery, to build a machine in general accordance with the Liddell patent, except at somebody else's expense; and that any mechanic, as soon as he had discovered, by experiment, the inefficiencies of the Liddell hook, would either find one ready made that was better, or experiment until he had reached the desired ends.

X-Q. 140. I think you can make a better answer to my question than you have given me, even if it is not quite so smart. Will you please try again?

A. I believe a man skilled in the art of paper bag machinery, in building any paper bag machine, would use a better hook than, shown in the Liddell patent.

X-Q. 141. You say, in the fifth section of your answer to Q. 11, that the hook E′, would be inefficient to hold the upper ply of the bag tube against the forming plate. Is it your impression that it, the hook, was intended to hold the paper against the forming plate?

A. Not absolutely; but in close contiguity thereto.

X-Q. 142. And I infer, from the way you put the matter, in answer to Q. 11, that you think it would be better for the operation of the machine, if the hook was of such a character as to hold the paper against the forming plate? Am I right?

A. I did not mean to use the word "against" in its absolute sense; but meant to use it as indicating a position much nearer to the forming plate, than that in which the bag blank is, in figure 4 of the Liddell patent.

X-Q. 143. What is your opinion as to the advisability

of holding the upper edge of the tube close to, or at some distance away from, the face of the plate?

A. In my opinion it is conducive to better work to hold the upper ply of the bag blank near to the former plate.

X-Q 144. Assuming that a skilled mechanic in the art of constructing paper bag machines shared your view as to the desirability of pressing the paper close to the forming plate at the point where the hook engages it; was it not, in view of the known state of the art, an obvious expedient to use, in place of a stationary hook or finger, such as E′, in Liddell's patent, a clamping finger which would actually bite down on the paper, and grip it firmly to the plate?

A. I did not express the view that it was desirable to "press" the paper close to the forming plate; but if a skilled mechanic wished to do so he would find means to his hand for so doing in the prior art.

X-Q. 145. Referring now to the sixth numbered section of your answer to Q. 11, in which you criticize the Liddell patent in respect of the forming fingers G, G, and H, H; I would like you to re-examine the drawings of the patent, and to state whether it is in fact entirely clear to you that the showing of these drawings is incompatible with a construction in which the fingers G, G, would actually grip the paper against the cylinder or carrier, in connection with which they work?

A. As the drawings of this patent show considerable space between the fingers referred to, and the cylinder, I think any gripping of the paper to said cylinder is incompatible with the showing.

Adjourned until Friday, January 23, 1903, at 11 o'clock A. M.

Friday, January 23, 1903, 11 o'clock A. M. Met pursuant to adjournment; counsel present as before.

Counsel for the defendant hereby notifies complainant's counsel, that since the adjournment, yesterday defendant's counsel has learned a fact relevant to the Liddell patent, No. 558,969, of which he never had any previous knowledge, or means of knowledge; and in justice to complainant, defendant's counsel will now state that fact on the record, in order to give complainant's counsel the earliest possible notice thereof. The fact, thus newly discovered, is as follows:

The co-relating mechanism of the Liddell patent, which is shown in figure 3, of the middle column, of Defendant's Drawing, No. 8, was never invented, contrived, suggested, planned, or otherwise produced by William Liddell. It was produced without his knowledge, co-operation, consent, or approval, by a draftsman in the employ of Rudolph M. Hunter in Philadelphia, Pennsylvania, about the beginning of the year 1896. In the latter part of the year 1895, William Liddell was taken or sent by some representative of the Eastern Paper Bag Company, to Rudolph M. Hunter, with a view to a supposed paper bag machine (which had been at least partly contrived by William Liddell) being made the subject of an application for a patent in the name of William Liddell, on behalf of the Eastern Paper Bag Company, which, at that time, had a contract with Mr. Liddell for the ownership of such inventions in paper bag machinery as he might produce, or might have produced. Rudolph M. Hunter paid little or no personal attention to the matter, but sent Mr. Liddell to a draftsman in another part of the City of Philadelphia to prepare the drawings for his proposed application. Mr. Liddell furnished that draftsman with some sketches or drawings which he had himself made previously. That draftsman did not follow the sketches or drawings of Mr. Liddell, or the directions which

Mr. Liddell had given him, when he made the three sheets of drawings which afterward became the drawings of the Liddell patent, No. 558,969. Instead of doing that, that draftsman himself contrived the co-relating mechanism shown in figure 3, of the middle column of Defendant's Drawing, No. 8, and shown in figure 1, of the Liddell patent, and Mr. Liddell never approved that co-relating mechanism, and never believed that it would perform any useful function in paper bag machinery.

On, or about January 7, 1896, some sort of a specification and some sort of drawings were shown to Mr. Liddell, as having been prepared to be used in prosecuting the application which was afterward filed in February, 1896, for the Liddell patent, No. 558.969. But those drawings, thus shown Mr. Liddell, were never signed by him, and were not signed by anybody on his behalf, till long after they were last seen by him on or about January 7, 1896. On or about January 7, 1896, Mr. Liddell was induced to sign some specification or other, to go with the unsigned drawings, and to sign and swear to a formal oath to go with that specification. Never, after that signing, did Mr. Liddell do or say anything about the case, and he never knew anything that was done after that time, relevant to the application for the Liddell patent, No. 558,969, until after that patent was granted on April 28, 1896, when he happened to see a reference thereto in the *Scientific American*. The application papers for the Liddell patent, No. 558,969, were never completed until several weeks after Mr. Liddell last saw them, which last seeing occurred on or about January 7, 1896. On or about January 25, 1896 Mr. Hunter sent those application papers to the Patent Office but they were still incomplete, and the Patent Office did not file them, because they were incomplete. Thereupon, all the drawings were returned as incomplete by the Patent Office, to Mr. Hunter, and Mr. Hunter kept them in his possession about a week more,

and returned them to the Patent Office on or about February 5, 1896, in a condition which was at last as complete as those drawings ever became ; and upon the reception of those drawings on February 6, 1896, in that condition, they were placed with the specification which Mr. Hunter had sent to the Patent Office about ten days before, and the whole application, being at last apparently complete, was filed in the Patent Office as Serial No. 578,291, on February 6, 1896.

Now having laid these newly discovered facts before complainant's counsel, defendant's counsel gives notice that he will, with due diligence, take the proper steps to secure permission to amend the defendant's answer, so as to make these facts technically admissible in evidence ; and will also apply to the Court for an extension of time in which to take evidence on behalf of the defendant, in order that these newly discovered facts may be regularly introduced in evidence.

X-Q. 146. It is, I understand, your opinion, as expressed in answer to Q. 11, that it would be impracticable in a paper bag machine, such as Liddell's, to have the fingers G, G, thrown into the tucks of the tube, without gripping them to the cylinder or carrier. That is, a machine in which such fingers did not grip, could not be successfully operated to manufacture paper bags. Is that correct ?

A. That is substantially correct.

X-Q. 147. In expressing this opinion, do you have in mind, the fact that the front end of the tubular blank is gripped to the carrier by the finger shown at c ?

A. I do.

X-Q. 148. You also express your opinion as to the inefficiency of the fingers H, H, for the same reason, namely, that they do not grip the paper to the oscillating forming plate. Is the anticipated mischief by reason of the non-

gripping of the paper equally serious, as to these fingers, and as to the fingers G, G?

A. I consider it so.

X-Q. 149. And if I understand you, you consider it necessary that the blank should be tightly gripped and held, by both such fingers, in order to make a practical operative machine? Is that the case?

A. I think in most cases, and in the employment of most such papers as are used in paper bag manufacture, that such gripping would be necessary to produce sufficient uniformity of product to be merchantable.

X-Q. 150. Do you think, Mr. Stone, that your knowledge and experience in the matter of building and operating paper bag machines, is sufficient to enable you to form an opinion on this point?

A. I do. If my opinion had been nebulous or unfounded on experience and observation, I would not have expressed it.

X-Q. 151. It has been testified in this case, by a witness for the defendant, that a paper bag machine built in substantial accordance with the patent to Leinbach and others No. 327,280, of September 29, 1885, operated to make the diamond fold and paper bags from the diamond folded blanks, with considerable success. Now, it is true, is it not, that none of the fingers operating to distend the bellows-fold in this machine, make a pinching contact with the paper?

Objected to as immaterial, because the combination of parts shown in the patent, No. 327,280, are substantially unlike the combination of parts shown in the Liddell patent, for opening out one end of a tucked paper tube, and folding it into a diamond form.

The suggestion to the witness embodied in the above so-called objection, is earnestly protested against by plaintiff's counsel.

Mr. Walker submits to the court that the above protest is absurd.

A. The fingers referred to in the patent, No. 327,280, have a much more intimate contact with the paper than the fingers G, G, and H, H, of the Liddell patent, and their action and operation are quite different therefrom. I do not consider them parallel cases. They would, however, I believe have, during portions of their operation, more or less of a pinching contact on the paper.

X-Q. 152. Please look also at the patent to Lorenz & Honiss, No. 331,722, of December 1, 1885, and state whether the fold distending fingers constructed and operating, as shown in that patent, make a pinching contact with the paper?

Same objection as to X-Q. 151.

A. The fingers referred to make just about the same amount of pinching contact with the paper, as the fingers in patent, No. 327,280.

X-Q. 153. Where do you find any pinching contact to take place in these fingers?

Same objection.

A. The action of the arms 163 and 164, in operating the wires 158 and 159, would tend to press downward, against the paper bag blank, the fingers referred to.

X-Q. 154. Examine that patent a little more carefully, and state if you are not entirely wrong in what you have stated in your last answer?

A. I see no reason for modifying my answer to the previous question.

X-Q. 155. If you are satisfied to let this stand as your final judgment on the matter, I am satisfied to drop the matter; but I shall probably use what I think to be a very marked error on your part, as the basis of an impeachment of your value as an expert, in the matter of such machinery. I will therefore ask you, if you care to do so, to still

further examine the patent, and to state whether your former answers should be modified or not?

Mr. Walker objects to this attempt to intimidate the witness; and Mr. Walker states that he, himself solicited the Patent No. 331,722, and has thoroughly understood the machine of that patent for more than eighteen years, and that the answer to X-Q. 153 is known to Mr. Walker to be correct.

Plaintiff's counsel states that he needs no further evidence from Mr. Walker, of his lack of familiarity with the art, and will be quite satisfied if he can establish the fact that the witness is as incompetent to properly advise the Court.

Mr. Walker states to the Court, that the art of self-opening square paper bag machines prior to the Liddell Patent, No. 558,969, as that art is disclosed in the nineteen prior patents which have been offered in evidence, has been the subject of very careful study by Mr. Walker, while that art was developing during the last twenty years; and that a large proportion of those prior patents, including the Patent No. 331,722, are Mr. Walker's own personal and professional product in respect of the description contained therein, of the mechanisms shown in the drawings thereof; and Mr. Walker expresses the opinion that the last statement of plaintiff's counsel, has no foundation whatever except a boyish desire on his part to insult defendant's counsel, and also to insult the accomplished gentleman who is testifying as an expert, for the defendant, in this case.

And Mr. Walker ventures to point out to Mr. Chambers, in the Stillwell patent, No. 407,794, some figures marked K^5, in figures 37, 38, 39 and 40 of that patent, which *are* analogous to the fingers G, of the Liddell patent, in not appearing to press down upon the paper, between them and the cylinder, when in position to do their work; and that if Mr. Chambers wants to vindicate the operativeness

of the Liddell fingers, G, by comparing them with some prior patent, he can do so in a more rational way by comparing them with similar fingers in the prior art, than he can by comparing them with the materially different combination of the Lorenz & Honiss patent, No. 331,722.

Mr. Walker regrets the necessity of inserting the foregoing statements in the record, but he confesses that there are limits to his patience, and that the arrogant insolence of Mr. Chambers, has now become unbearable.

Mr. Chambers submits that his remarks heretofore made are excusable, if not justified, in view of Mr. Walker's intrusion on the cross examination, and insisting on testifying himself, as well as his refusal to let his witness be tested, by well-approved methods of cross examination. Whether Mr. Walker's competency as an expert be as he himself puts it to be, or not, there is certainly no place for the intrusion of his opinions in the deposition of this witness, who has undertaken to give his opinions, not only as a skilled and experienced mechanical engineer, but also on questions which plaintiff's counsel thinks could only be properly handled by a mechanical engineer having special knowledge and experience in the construction and operation of paper bag machinery, and Mr. Chambers proposes, if permitted, to test the competency of the witness with regard to questions peculiarly applicable to paper bag machinery.

Mr. Walker calls the attention of the Court to the fact that Mr. Chambers has thus far put ninety-three cross-questions to this witness, and that Mr. Walker has not intervened in the cross examination, except to object to fifteen of those questions, which is a very much smaller proportion of objections than those made by complainant's counsel when Mr. Walker was cross examining complainant's expert ; and Mr. Walker hereby denounces as being out of conformity with the truth, the charge which Mr. Chambers has made that Mr. Walker refuses to let this

witness be tested by well-approved methods of cross-examination.

A. I can see no reason for in any way changing my answer to X-Q. 153, as it is perfectly obvious to me as an engineer that the action would be as stated.

X-Q. 156. Do you happen to be informed as to whether or not in paper bag machinery, utilizing distending fingers, which enter the tucks of bellows folded tubes, and co-operate to distend these tubes, to assist in forming a diamond fold, the fingers always actually grip the paper to a co-acting surface?

Objected to as ambiguous, and likely to be understood by the witness, and by the Court, in two different ways, respectively.

A. To the best of my knowledge and belief, such fingers do not always so grip the paper.

X-Q. 157. Please state what you know of such constructions, where the fingers do not work with a gripping action on the paper?

A. In the Lorenz & Honiss patent, No. 361,951, and in the Lorenz & Claussen patent, No. 410,841, the side forming fingers 132, and 133, respectively, I think have no gripping action on the paper. Also among others, in the Claussen & Mortson patent, No. 411,544 the side fingers 124, 125, 126, and 127, have no such gripping action. I have not gone through the whole art in citing these; but have selected such as came to my mind.

X-Q. 158. The patents with which you are familiar, show also many instances wherein the distending fingers actually grip and hold the paper while acting upon it, do they not?

A. They do.

X-Q. 159. Can you specify what were common and usual constructions to secure a gripping action in the fingers, in those patents which show such gripping action?

A. One construction that has been used, in a number of

cases, is to pivot such fingers, so that they will act in a plane substantially at right angles to the surface to be gripped upon. Another construction, is to have the fingers operated upon by means to throw them down upon the tucks to be clamped, by supplementary devices; as in the wire fingers of the Leinbach, Wolle & Brunner patent, No. 327,280, and others. A third means is shown in figure 3, of the Lorenz & Claussen patent, No. 534,512, to consist of giving a slight inward inclination to the axis of fingers, otherwise much like those of the Liddell patent, No. 558,969; so that, as those fingers move into the tucks, they also move slightly downward upon the paper, and hold the paper positively to the surface of the cylinder below. Still another type is shown in the Lorenz & Honiss patent, No. 410,842, in which co-acting fingers work as a pair of nippers to grip the paper, and then turn it over through a segment of a circle.

Adjourned until Saturday, January 24, 1903, at 11 o'clock A. M.

Saturday, January 24, 1903, 11 o'clock A. M. Met pursuant to adjournment; counsel present as above.

X-Q. 160. It appears that you are aware that both non-gripping fingers and gripping fingers, were common in the art prior to Liddell's patent, and in view of this fact, and of the fact that the patent is addressed to those skilled in the art; do you not think that the representation of fingers in that patent was sufficient to indicate, to the class of readers to which it was addressed, that they should use whatever class of gripping fingers their experience and judgment indicated to them, as being most advisable?

A. I think that the representation in the patent does not indicate, either in the drawings or specification, any latitude in this matter; but I also think it quite within the

ability of an engineer skilled in the art, to provide this machine with either gripping or non-gripping fingers.

X-Q. 161. Does the specification of this Liddell patent embody any statement or direction as to whether gripping or non-gripping fingers should be used?

A. I think the implication is clear, in that patent, that there was no intention on the part of the inventor, to have the fingers, G, G, and H, H, grip the paper. My reasons for this point of view as to the drawings, have been set forth in answer to a number of questions; and in the specification of said patent, I find no statements describing them as having a gripping action, but simply as being thrust into positions to allow of the paper being folded over them.

X-Q. 162. As a matter of fact the specification does not state either that the fingers grip, or do not grip, is it not so?

A. Quite so, according to my understanding of it.

X-Q. 163. I have tried to go into all the alleged defects in the Liddell design, which are referred to by you in answer to Q. 11, and to give you a full opportunity of explaining your reasons for criticising that design, as you do in Q. 11. Is there anything more which you desire to say, or which should be said, on this point, to put the court fully in position of your point of view?

A. I believe I have nothing to add.

X-Q. 164. In your answer to Q. 12, you state that it is within human ability to so proportion the cams, arms and gears of the Liddell patent, as to cause the edge W, of the forming plate E, to travel in a line concentric with the cylinder C. But you say that this would require the skill of an expert draftsman, and would require some considerable time to do. And then in answer to Q. 13, you say, and the statement seems not to be directly responsive to the question, that in your judgment, all the objections made as to the construction and operation of Liddell's patent,

could not be eliminated without additional invention; but most of them probably could. Was this last statement intended to qualify your answer to Q. 12, or did it refer to some other feature of the machine than those specifically referred to in your answer to Q. 12?

A. In the statement referred to in reference to additional invention, I had in mind, a mechanism for co-relating the movements of the Liddell forming plate, and the Liddell cylinder, of greater efficiency and better design than that shown in the patent; and while, as I have stated, I think some mechanism which was better than the Liddell mechanism might be provided, without additional invention, I believe that the mechanism of the required efficiency for long continuous use, would require invention.

X-Q. 165. In answer to Q. 13, you institute a comparison between some sort of a revised Liddell machine, and the machine shown in the drawings of the Lorenz & Honiss patent, No. 361,951. Did you ever see a machine constructed in accordance with the drawings of that patent?

A. According to the best of my remembrance, I have not seen such a machine; and if I ever saw it, it was some years ago.

X-Q. 166. In answer to Q. 18, you institute a comparison as to efficiency between some kind of a Liddell machine you have in mind, and some twenty-one other machines as shown in the drawings of various patents enumerated in your answer. Have you ever seen machines built in accordance with those patents or any of them?

A. I have seen machines built in accordance with the first four patents mentioned, namely, No. 242,661, No. 327,280, No. 331,722 and No. 333,647; but do not know that I have seen machines built in accordance with any of the others.

X-Q. 167. Can you state, as a matter of distinct recol-

lection, that you saw those machines built in accordance with those four patents?

A. I cannot state that the machines referred to, corresponded in all particulars to the patents mentioned; as I never compared the machines and patents. But, according to the best of my knowledge, belief and remembrance, they corresponded substantially therewith.

X-Q. 168. How long ago did you see those machines?

A. I believe I last saw them in 1884 or 1885.

X-Q. 169. And if I recollect, your examination of them was simply one of curiosity, but you had no business connection with their construction or operation. Is that correct?

A. I had no business connection with their construction or operation; but my examination of them had a much deeper basis than curiosity, as they were a marked innovation, and the knowledge I was able to gain from them was not only interesting, but of value to me.

X-Q. 170. I understand, however, that you do not claim in your answer to Q 18 to have in mind the exact construction of these four machines, and that what you do have in mind, in connection with this comparison, is the construction shown in the patent drawings, both as to these four, and the other seventeen machines?

Mr. Walker objects to this question, because it is out of strict conformity to the testimony of the witness, in speaking of "four machines;" the fact being that the witness testified in reply to X-Q. 166, that he had seen machines built in accordance with four patents specified in that answer; but did not testify in that place, or in any place, what was the number of the machines which he had seen built in accordance with those four patents.

This objection is protested against as instructive and leading to the witness, the witness being present while it was dictated by counsel; and plaintiff's counsel requests Mr. Walker in the future, to place his objections upon the

record, in such manner, that they will not be heard by, or read by the witness, prior to answering the cross questions.

Mr. Walker hereby denies the request of plaintiff's counsel, and claims that he has a right to expose all the traps, one after the other, which plaintiff's counsel has laid, and is laying, and may hereafter lay, for the witness.

A. The comparison made in answer to Q. 18, was based on the construction shown in the drawings of the patents referred to, in the light of my general engineering knowledge, and of my specific knowledge of paper bag machinery.

X-Q. 171. In instituting the comparison between the various machines of the different patents, and the Liddell machine, you had in mind, did you confine yourself to the operation of the exact mechanism shown in the various patent drawings, with reference to the shape, sufficiency, operativeness, etc., of the cams illustrated; and the exact proportions, arrangements, etc., of the gears or other mechanical devices by which motion is transmitted from cams to operative parts?

A. I did not analyze all the drawings of all the patents mentioned to fully prove whether the mechanisms would operate as set forth; but after a careful study of the machines shown in the patents, as to their construction and mode of operation, and the detection of no errors therein, that could not be cured by good engineering skill, I made the comparisons.

X-Q. 172. Do you suppose, Mr. Stone, that a single one of these machines illustrated in the drawings of the twenty-one patents, could be built from the drawings of the patents alone, and without in some way changing or modifying the outlines of cams illustrated, or supplying cams indicated and not illustrated; and if so built, would be practically operative machines?

A. No engineer would attempt to build a machine of the class of those mentioned, from patent drawings; but I

nevertheless believe, that in many of the patents referred to, the operativeness of the machines set forth is complete, to an extent sufficient to enable an engineer capable of building such machines to supply all needed drawings therefrom.

X-Q. 173. Question repeated.

A. I believe that not a single one of the machines illustrated in the patents referred to, could be built without at least some modification in some cam outlines; and in case cams were indicated, and not outlined, such outlines would necessarily have to be supplied.

X-Q. 174. The comparison made by you in answer to Q. 18, is a comparison, then, between the Liddell machine with some hypothetical alterations and corrections, mentally supplied by you, and the twenty-one other machines also modified and corrected hypothetically; is that a fair statement?

A. Substantially so.

X-Q. 175. But in no one case have you actually and definitely planned the machine; that is, you have not in any case, actually worked out, and put in tangible form, the alterations and corrections which must necessarily be made; is that true?

A. Your understanding is correct.

X-Q. 176. In answer to Q. 20, you institute a comparison as to efficiency and other qualities affecting the value of the machines, between the defendant's machine, as shown in the sample machine in Mr. Walker's model-room, and machines made in accordance with the Lorenz & Honiss patent, No. 361,951, and with the Stilwell patents, No. 407,794 and No. 417,346. What you say as to the machines in question, is deduced by you from examination of the patents, and not from personal familiarity with the construction and operation of the machines; is it not so?

A. As far as the Lorenz & Honiss and Stilwell ma-

chines are concerned, my deductions were made from the patents of those machines.

X-Q. 177. Referring next to your answer to Q. 22, in which you produce and explain Defendant's Drawing, No. 5, do you think that the two columns of figures, one marked "L. & H. 337,966," and the other marked "Liddell, 558,969," are calculated to give a fair impression of the relative operations of the two machines, shown in the patents bearing the numbers indicated?

Objected to as immaterial, because Defendant's Drawing, No. 5, and the testimony connected therewith, does not purport to relate to "the relative operations of the two machines" shown in the patents bearing the numbers indicated, but the purport of Defendant's Drawing, No 5, is precisely explained in the answer to Q. 22, and Mr. Chambers is entitled to cross examine the witness upon the testimony which he gave upon the subject of that drawing, and he is asked not to occupy time in setting up a man of straw and then knocking him down.

Mr. Chambers submits to the Court that the above interruption of the cross examination is absolutely inexcusable and without color of justification. He protests, as he has repeatedly had occasion to protest, against Mr. Walker's insistance in replying to cross-questions by way of objection, and so instructing his witness, as to what Mr. Walker desires his answer to be; and he submits to the Court that this is simply another and striking instance of Mr. Walker's lack of confidence in his witness, a lack of confidence which Mr. Chambers thinks must also be felt by the Court in view of Mr. Walker's answers.

Mr. Walker calls the attention of the Court to the fact that he has objected to only two cross-questions to-day, though it is now nearly four hours since to-day's cross-examination began, nearly three hours of which were occupied by questions and answers, and not more than three minutes by Mr. Walker's two objections. And Mr.

Walker states to the court that his objection to X-Q. 177 was not made for the purpose of instructing the witness how to answer, because he would not dare to instruct the accomplished gentleman who is on the witness stand how to answer any question, even if he desired so to do; and because the witness understands the facts of this case far better than counsel on either side understands them, and cannot be helped by anybody in answering the questions put to him. Mr. Walker's motive in objecting to X-Q. 177 was simply and only to prevent Mr. Chambers from succeeding in a transparent attempt to mislead the court, which attempt, though transparent to defendant's counsel, by reason of his acquaintance with the case, might not be detected by the judge.

A. I think that the figures shown in Defendant's Drawing, No. 5, show so little of the operations of the machines referred to that they are not a basis for forming any impressions of such operations; but in so far as such operations are shown, I consider the drawing calculated to give a fair impression.

X-Q. 178. Would not a natural inference be from this sheet of drawings, that in both cases the oscillatory plate shown in dotted lines, moved in exactly the same way, and through exactly the same path, with the two machines? And would not this be a mistaken impression, if entertained?

Objected to as misleading, because the second column of figures in Defendant' Drawing, No. 5, appears on its face to be identical with sheet 3 of the drawings of the Liddell patent, No. 558,969, and because if the drawings of sheet 3 of the Liddell patent, and the copy thereof in the second column of Defendant's Drawing, No. 5, would make a mistaken impression, that mistaken impression would result from the fault of the Liddell patent, and would not result from any fault in Defendant's Drawing, No. 5. So far as the question inquires whether the first

column of Defendant's Drawing, No. 5, is adapted to make a misleading impression, the question is not objected to.

Mr. Chambers renews the protest noted by him to Mr. Walker's similar disorderly conduct with reference to X-Q. 177.

A. No man competent to read and comprehend Defendant's Drawing, No. 5, would draw the inference set forth in the question. But if such an inference were drawn by any one, such inference would be a mistaken one.

X-Q. 179. To my eye, the parallel and almost perfect identity of the drawings in the two columns in Defendant's Drawing, No. 5, seems manifest. Now you admit, I understand, that the drawings of this exhibit "are not a basis for forming any impressions of such operations" (the operation of the two machines in question) and that any inference drawn from the sheet of drawings "that the oscillatory plate shown in dotted lines moves in exactly the same way, and through exactly the same path with the two machines" would be a wrong inference. Why, then, Mr. Stone, did you prepare this sheet of drawings, marked Defendant's Drawing, No. 5?

This question is objected to as misleading, and in support of the objection the attention of the Court is called to Q. 22, and the answer to that question

Mr. Chambers' protest repeated.

A. You are right as to the close parallelism and substantial identity of the two columns of figures in Defendant's Drawing, No. 5. This drawing does not purport to show the paths of the forming plates respectively, in space, but to show those paths in relation to their bag blanks, respectively only. Furthermore, any man who was capable of reading and understanding Defendant's Drawing, No. 5, would naturally and obviously have recourse to the drawings of the patents referred to. Personally, I did not prepare this sheet of drawings referred to.

X-Q. 180. Do you mean that this sheet of drawings was not planned and devised by you?

A. It was not.

X-Q. 181. And as far as you are concerned, I understand you to entirely disclaim any intention of misleading the Court by making and introducing this drawing? Am I correct?

A. I disclaim any intention of misleading the Court in this matter, or any other.

Now that the question has been answered, so that Mr. Chambers cannot make his standing objection, Mr. Walker objects to X-Q. 181, as an attempt by inuendo to leave the impression upon whoever reads this part of the deposition, that Defendant's Drawing, No. 5, is misleading; which attempt, itself, is denounced as wilfully misleading, in view of Q. 22, and the answer to that question, which question and which answer plainly show that Defendant's Drawing, No. 5, was introduced for the sole purpose of comparing the several manipulations which take place, according to figures 5, 6 and 7, of the Liddell patent, No. 558,969, in the operation of opening out one end of a tucked paper tube, like that shown in figure 5, of that patent, through the form shown in figure 6, and through the more advanced form shown in figure 7, into the diamond form shown in figure 8; with the several manipulations which take place upon the bag tube, in doing the same work according to the Lorenz & Honiss patent, No. 337,966, of March 16, 1886; and which purpose did not include, and did not purport to include, any comparison of "the relative operations of the two machines shown in the patents bearing the numbers indicated" in Defendant's Drawing, No. 5.

Mr. Walker further states to the Court that Defendant's Drawing, No. 5, was planned by himself, and that it is exactly what it purports to be in the evidence of this witness; and that the inuendos of Mr. Chambers in re-

spect of the purpose, purport, and effect of that drawing, are totally destitute of foundation, in fact and in reason, and are justly resented by counsel for the defendant.

X-Q. 182. Did you design and plan the drawing marked Defendant's Drawing, No. 6, which was produced and shown you as part of Q. 23, and which you speak of in your answer to that question?

A. I did not.

X-Q. 183. Then the elaborate scheme pictorially represented in this drawing, and verbally developed by you in you answer to Q. 23, was not original with you, but was conveyed to your mind, by some other or others, is it not so?

A. Defendant's Drawing, No. 6, was not originated by me, but was submitted to me by defendant's counsel.

Adjourned until Monday, January 26, 1903, at 11 o'clock A. M.

Monday, January 26, 1903, 11 o'clock, A. M. Met pursuant to adjournment; counsel present as before.

X-Q. 184. Have you, or has any one else, as far as you know, ever planned or worked out a scheme of mechanism embodying in a machine, or machine design, the devices partly indicated in the middle column of Defendant's Drawing, No. 6?

A. I have not, and I know of no one having made a machine or machine design in accordance with the mechanism shown in the middle column of Defendant's Drawing, No. 6.

X-Q. 185. I infer from your answer to Q. 23, that, in your judgment, no invention would be required to provide the necessary cams, and connecting devices which would make the scheme shown in the middle column of Defendant's Drawing, No. 6, an operative paper bag machine? Am I correct?

A. In my judgment, no invention would be required in so doing, as the necessary cams and operative mechanisms are either wholly at hand, or nearly so, in the patents from which the middle column of figures in Defendant's Drawing, No. 6, was made up.

X-Q. 186. Do you mean to be understood as asserting, that either of the three patents you have referred to in this answer, or all of them together, show such cams and connecting devices as could be applied to make the device of the middle column of Defendant's Drawing, No. 6, an operative machine?

A. I did not so assert; but did state that if not all were to be found there, nearly all were; and I believe that such other parts and connections as were needed, to make this hypothetical machine operative, would require no invention in their making.

X-Q. 187. You have no doubt of your ability to design and build such a machine, without exercising other than your professional skill?

A. I believe it is within the ability of my professional skill to embody the scheme of the middle column of Defendant's Drawing No. 6, in an operative paper bag machine.

X-Q. 188. Now suppose, Mr. Stone, that Mr. Walker in preparing this drawing, had gone somewhat further with the planning of the machine, and had shown, for instance, a cam which, on careful investigation, should be found would not give the proper movements to some of the operative parts of the machine. Would such an error, in the more complete drawings, have led you to doubt whether your professional skill would enable you to construct an operative machine?

A. It would not in itself have led me to such doubt.

X-Q. 189. And supposing Mr. Walker had shown some gears or other mechanical devices for transmitting motion to the operative parts, which you did not think

well adapted for that purpose. Would that fact have led you to doubt whether your mechanical skill was sufficient to construct an operative machine, embodying Mr. Walker's fundamental conception?

A. The hypothesis which you propose is so vague that I hardly know how to answer it. As I have stated, I believe it would not be beyond my mechanical skill to supply such devices as I find in the three patents mentioned, or to make such changes in them, as would make an operative machine. As to any mechanisms that Mr. Walker might have devised and inserted in such drawings, they are beyond my conception or imagination.

X-Q. 190. I don't wonder that in view of the mechanical schemes which Mr. Walker has developed in the drawings put in evidence in this case, that you feel some hesitancy in expressing your ability to understand what he might do next. But all that I asked you to do would, I think, be easy; that is, just to assume that Mr. Walker had made a mistake. And I understand the substance of your answer to be that no matter how wide the conceivable area of blunders on Mr. Walker's part might be, still no blunder that he might make in the connecting mechanism, would cause you to doubt your ability to overlook it, and provide an efficient connecting devise to give the proper motion to the parts. Is that substantially correct?

A. I would not contract to overlook any possible engineering errors, that might be made in the case referred to; but I believe I have sufficient engineering judgment to at least throw them away, and use such as would be efficient.

X-Q. 191. The fact that Mr. Walker in that part of Defendant's Drawing, No. 6, which originated with him, did not clearly indicate what kind of grippers or fingers were employed, and did not indicate any mechanism for operating these fingers or grippers, did not cause you to doubt your ability to supply, from the state of the art,

and your engineering skill, proper grippers or fingers, and proper mechanical devices for operating them?

A. As far as I have observed, it does not yet appear in the testimony, what part, if any, of Defendant's Drawing, No. 6, was originated by Mr. Walker; but the indication as to the grippers or fingers employed, in the middle column of said drawing, is sufficiently clear to enable me to supply, from the patents cited, proper grippers or fingers and proper mechanical devices for operating them.

X-Q. 192. Now suppose, Mr. Stone, that the Liddell patent had never been brought to your attention, but that you were familiar with the general state of the art, prior to the date of that patent; and suppose the figures of the third column of Defendant's Drawing, No. 6, were submitted to you as showing the operative parts and mode of operation of a paper bag machine; do you think it would have required more than your mechanical skill and experience to have embodied the design of that third column in an operating paper bag machine?

Question objected to as immaterial.

A. I believe I could devise means from the prior art, to cause the mechanism shown in the last column of Defendant's Drawing, No. 6, to get through the motions therein shown, to unfold the end of a tucked paper tube, and fold it down into a diamond form. But I have not, as stated several times before, gone fully enough into the several possible means for co-relating the movements of the parts, to feel sure that I could make a machine which was commercially operative.

X-Q. 193. And of course you have not gone at all into the possible means for co-relating those movements of the operative parts which distinguish Mr. Walker's design, as shown in the middle column of Defendant's Drawing, No. 6, from prior devices in the art?

Objected to as misleading.

A. I have investigated at some length, co-relating means for the movements of the parts shown in the middle column of Defendant's Drawing, No. 6.

X-Q. 194. Question repeated.

Mr. Walker objects to X-Q. 193, as being misleading and ambiguous, if it is thought by Mr. Chambers to have any meaning to which the answer thereto, is not fully responsive.

A. I do not know how to make my answer clearer to the question, as I understand it.

X-Q. 195. I understand you to conceive that Mr. Walker, in the middle column of Defendant's Drawing, No. 6, has borrowed the forming plate, marked 67, in that drawing, from the forming plate similarly marked in the Lorenz & Honiss patent, No. 337,966; and has borrowed rolls 12, and 11 and the tucker plate 50, from the parts similiarly marked in the Lorenz & Claussen patent, No. 534,512. But you do not find in the prior art, any such combination and co-action of the tucker plate 50, and former plate 67, as Mr. Walker's drawing presents, do you?

A. I cannot testify as to Mr. Walker's borrowings, in relation to Defendant's Drawing, No. 6. But I have testified, in my direct examination, as to the origin of the parts shown in the middle column of said drawing. I do not find in the prior art, a combination and co-action of the folding-plate 50, and the tucker plate 67, shown in the middle column of Defendant's Drawing, No. 6.

X-Q. 195½. And of course you do not find in the prior art, the combination and co-action shown in Mr. Walker's drawing, between the forming plate 67, tucker 50, and the rolls 11 and 12?

A. It is not clear to me to what you refer as "Mr. Walker's Drawing."

X-Q. 196. I refer to the middle column of Defendant's Drawing, No. 6, which you tell me, was not planned by

you ; but was turned over to you by Mr. Walker. Until we find someone who is willing to father this foundling, I should continue to refer to it as an offspring of Mr. Walker. With that understanding, please answer my last question.

Mr. Walker objects to X-Q. 195, as misleading ; because it assumes the existence of a "combination and co-action" between four parts therein specified, but which have not yet been said by anybody to co-act.

The above statement is objected to as suggestive and leading to the witness.

A. I do not find in the prior art, the combination and co-action between the forming plate 67, tucker 50, and the rolls 11 and 12, shown in the middle column of Defendant's Drawing, No. 6.

X-Q. 197. Now, am I to understand that when in answer to X-Q. 193, you stated that you had investigated at some length, the co-relating means for the movement of the parts shown in the middle of Defendant's Drawing, No. 6, you had reference to such means as would be necessary to give effect to the new combinations and co-actions referred to in X-Q. 195 and 196, and the answers thereto ?

Objected to as misleading.

A. In the answer referred to, I had reference to such means as would include means necessary to give effect to the combinations and co-actions which you mentioned.

X-Q. 198. If you have ever made any tangible representation of such means, will you produce it ?

A. I have not made such tangible representation.

X-Q. 199. In your answer to Q. 23, you state, in substance, that the machine invented by Mr. Walker, as shown in the middle column of Defendant's Drawing, No. 6, shows devices which conform in every respect to the language of claims 1, 2, and 7, of the Liddell patent. Now in saying this, did you mean to be understood as asserting that the Walker design was in fact and in substance, iden-

tical with the Liddell invention, referred to, in the first, second, and seventh claims of his patent ?

Objected to as misleading ; because the witness has not said or intimated that Mr. Walker ever invented any machine, as shown in the middle column of Defendant's Drawing, No. 6.

The question embodied in the last sentence is objected to ; because it calls upon the witness to construe claims 1, 2, and 7, of the Liddell patent, on cross examination ; whereas, on direct examination, he did not undertake to construe any claim of any patent ; but only to compare the exact language of claims 1, 2, and 7, of the Liddell patent, with certain other structures, including that shown in the middle column of Defendant's Drawing, No. 6.

The above remarks objected as leading and suggestive to the witness.

A. I did not mean to be understood as asserting, nor did I assert, that the mechanism set forth in the middle column of Defendant's Drawing, No. 6, was in fact, and in substance, identical with the Liddell invention, as set forth in claims 1, 2, and 7, of the Liddell patent No. 558,969.

X-Q. 200. Your 24th answer relates largely to a certain drawing, marked Defendant's Drawing, No. 7. Was this drawing conceived and planned by you ?

A. It was not.

X-Q. 201. By whom was it brought to your attention ?

A. It was brought to my attention by the defendant's counsel.

X-Q. 202. I wish you would look at the first and second column of this pictorial argument of Mr. Walker's, and state whether on calm reflection, you do not think that the comparative showing of the Crist machine and Mr. Walker's so-called Modified Crist Machine, is evidently calculated to mislead and confuse any one examining the

drawings, and particularly one who is not a mechanical expert?

A. I think that the comparative showing of the first and second columns of Defendant's Drawing, No. 7, is not calculated, nor does it lie in that drawing, to mislead and confuse any one capable of reading and understanding that drawing.

X-Q. 203. Is it apparent upon examining this drawing, that the Crist machine is one intended to act only on a plain untucked tube; while Mr. Walker's machine is one devised to act upon a bellows-folded tube?

A. Neither of these features are plain upon examination of this drawing; as the drawing was not planned to set forth the whole exposition of the subject in hand, but was to be read in the light of, and in connection with the answer to Q. 24 and the various patents referred to in that answer.

X-Q. 204. If any one was misled by an examination of the Defendant's Drawing, No. 7, into entertaining the idea that the plates indicated at T, T, in the first column, were in any way similar to, or performed the functions of, the former plate E, of the Liddell patent, they would be entirely mistaken, would they not?

A. They would not.

X-Q. 205. If that is your opinion, let us investigate a little the points of similarity and dissimilarity. In the first place, the plates T, of the Crist patent, are much narrower than the plates E, of Liddell's patent, and sufficiently narrow to be withdrawn from the inside of the diamond fold after it is formed. Is this not so?

Mr. Walker asks Mr. Chambers to state whether this question implies that the satchel-bottom paper bag made by the Crist machine is to have the same capacity and perimeter, when opened, as the square-bottom paper bag made by the Liddell machine, on the one hand; or whether, on the other hand, the two paper bags contem-

plated are to have the same width when they are collapsed upon their completion in the two machines respectively; because this point must be known before anybody can tell whether the plates T, of the Crist patent, are to be narrower than the plate E, of the Liddell patent.

Mr. Chambers states to the witness in view of the above inquiry, that his question does not refer to the question of size, as measured by inches; but to the breadth of the plates T and E, as compared with the breadth of the tube in connection with which they operate.

A. In the Crist patent, the plates T are narrower in relation to the bag tube on which they operate, than the plate E, of the Liddell patent, is in relation to its bag tube; and the plates T, of the Crist patent, are sufficiently narrow to be withdrawn from the inside of such a diamond fold, as it assists in making, and as is shown in figure 12, of the Crist patent, No. 543,571.

X-Q. 206. In the operation of the Crist machine, the plates T enter the mouth of the bag blank fed to the cylindrical carriage, in connection with which they work. Is it not so?

A. One after another, on successive bag blanks, yes.

X-Q. 207. And the plate E, of the Liddell machine, and the plate 67, of Mr. Walker's machine, shown in the middle column of Defendant's Drawing, No. 7, never enter the mouth of the tube; but, on the contrary, act upon and above or on the outside of the upper ply of the tube. Is it not so?

A. That is quite true.

X-Q. 208. And if anybody got a different impression from Defendant's Drawing, No. 7, they would be deceived, would they not?

A. Self-deceived, I think.

X-Q. 209. The plates T, of the Crist machine, do not act as defining plates, to determine the position of the cross fold of the diamond, do they?

A. They do.

X-Q. 210. Think about this a little, and if you are of the same opinion, explain in what manner, they so act?

A. In opening up from the position shown in figure 7, to that in figure 8, of the Crist patent, No. 543,571, the action is quite decidedly to define the cross-fold of the bag tube, in connection with its partial definition, made by a creaser in the roller P, before reaching this point.

X-Q. 211. As a matter of fact, the cross-fold in the Crist machine, is defined and the paper creased on the proper line for the fold, by the creasing-bar k, on the roll P before the blank is fed to position over the plate T, and the plate T, then simply pushes back the upper ply of the paper tube, which, by reason of its preliminary creasing, folds over upon itself on the line determined by the creaser. Is it not so?

A. I do not consider that the "preliminary creasing" by the creasing-bar k, defines the cross-fold, but that this result is finally accomplished by the plate T, at or near the line indicated by the creasing-bar k.

X-Q 212. Yet it is a fact, is it not, that the edge of the plate T, of the Crist machine, does not lie over the part of the paper, where the cross-fold is to be formed; but on the contrary, lies, while working, entirely on the under side or inside of the ply of paper which is turned over in forming the cross-fold?

Objected to as immaterial.

A. It is a fact that the edge of the plate, T, of the Crist machine, is at all times behind the paper acted upon, and pushes that paper ahead of it in its action thereon.

X-Q. 213. And by contrast with the Crist plates, T, the plate E, of the Liddell machine, and the plate 67, of the Walker Machine of Drawing, No. 7, act entirely on the upper surface of the upper ply of the tube, and provide, in their edges. a straight edge over and about which, the

upper ply of the paper is turned to form the cross-fold. Is it not so?

A. You are quite right.

X-Q. 214. Do you think that this difference between the representation of the Crist machine, and the Walker middle column machine, would be obvious to one examining the drawing, No. 7.

Objected to as immaterial unless the supposed examination is to be had in connection with the answer of the witness to Q. 24 of this deposition, where the whole subject is fully explained.

The above statement objected to as instructive to the witness, and adapted to confuse his mind with respect to the subject matter of the question.

A. I believe that the difference referred to, between the first and second columns of Defendant's Drawing No. 7, would be entirely obvious to any one capable of comprehending Defendant's Drawing No. 7; as a person of such capability would obviously read it in connection with the answer to Q. 24, and in connection with the patents referred to therein.

X-Q. 215. That is, in substance, if a man was told that the plates, T, T, were narrow, and did not extend across the blanks, while the plates 67, were broad, and did extend entirely across the blanks; and if he were told that the narrow plates, T, in the operation of the machine entered the blank, and acted against the under side of the upper ply of the paper, while the plate 67, of the middle column, never entered the blank, but acted entirely on the outside thereof; and if he were told that the plates T, did not afford a defining edge for the paper to fold over, while the plate 67, did; and if he were told that the Crist machine was one for acting on an untucked tube, while the Walker machine of the middle column of Defendant's Drawing, No. 7, was designed to act upon a tucked tube; then he would not be misled by the apparent similarity on the face

of the drawings, of the parts enumerated and contrasted? Is that, in substance, what you mean?

This question is objected to because it does not specify what kind of a "man" it contemplates; and because some men there are who could never understand Defendant's Drawing, No. 7, no matter how much they were told; and because there may be other men so skilled in reading paper bag machine drawings, that they would understand the first column, and also the second column, of Defendant's Drawing, No. 7, with little or no explanation from anybody. Mr. Chambers is invited to specify whether the "man" referred to in the question is a man skilled in reading paper bag machine drawings, or whether he is a man who never saw any mechanical drawing in his life, or whether he is some other kind of a man.

Mr. Chambers protests against the above intrusion of Mr. Walker, as having no assignable purpose except instructing his witness.

A. I cannot sanction the description set forth in the question, as it is not in accord with my understanding of the mechanism set forth in the first and second columns of Defendant's Drawing, No. 7; but I do believe that no man capable of understanding this drawing, would be misled thereby, as I have stated several times before, in answer to several previous questions.

X-Q. 216. I thought we had agreed that no man was capable of understanding this drawing, unless it was explained to him. Do you mean to say, now, that this drawing apart from the explanation which you have given of it in your direct testimony, or some similiar explanation, is in all of its parts, one which would be clearly understood by even an expert in paper bag machinery; so understood that he would fully comprehend all the real differences which exist between the Crist machine, partially represented

in the first column, and the Walker machine as represented in the second column?

Objected to as immaterial.

A. Defendant's Drawing, No. 7, taken by itself, is not self-explanatory; but any expert in paper bag machinery would have no difficulty whatever, in understanding it fully, and in comprehending all the real differences which exist between the first and second columns therein; for if the details of the machines referred to, were not clear and vivid in his mind, he would immediately refer to the patents noted, for additional light. I would have no apprehensions whatever in entrusting Defendant's Drawing, No. 7, to the understanding of such a man.

X-Q. 217. In your answer to X-Q. 215, you say you cannot sanction the description set forth in the question, as it is not in accord with your understanding of the mechanism set forth in the first and second columns of Defendant's Drawing, No. 7. Wherein do you think this description to be erroneous?

A. The reference to "narrow" plates T, T, and "broad" plates 67, is erroneous and misleading, in that the figures in the first and second columns of Defendant's Drawing, No. 7, being of the same scale, would have these plates substantially the same width.

X-Q. 218. I do not think you mean to quibble; but I think you ought to have understood that my question in the point you criticise, referred to the relative breadth of the plates, with reference to the tubes upon which they act. What I meant to convey in my question, was that the plates T, of the Crist machine did not extend entirely across the blanks, while the plate 67, of Mr. Walker's middle column, is intended to indicate a plate which does extend entirely across the blank, and affords a straight edge over which the cross-fold is formed, throughout its entire length. With this understanding, you would not disagree with my statement, would you?

This question is objected to as ambiguous, when taken in connection with X-Q. 215, back to which it relates, and as likely to be misunderstood by the witness, or by the Court or both ; and Mr. Walker invites Mr. Chambers to make his questions plain enough in their signification, to obviate the danger of misunderstanding.

Mr. Chambers states that his question is, he thinks, perfectly clear, and he desires to have the witness' answer to it.

Mr. Walker calls the attention of the court to the following criticism, of the question, in point of clearness or ambiguity.

What purports to be X-Q. 218, is mainly composed of a combination of statements, and the only interrogatory in that matter, is contained in the last sentence, which reads : "With this understanding, you would not disagree with my statement, would you?" The ambiguity resides in the doubt as to what "statement" is referred to, by the words "my statement"; which doubt cannot be solved without ascertaining whether it refers to one of the statements in X-Q. 218, or whether it refers to one of the statements in X-Q. 215, or whether it refers to all of the statements in X-Q. 215. It is therefore respectfully suggested to Mr. Chambers to plainly ask this witness some question that is complete and clear within itself, so that whether the answer is in the affirmative or in the negative, it can afterward be known what it is that is affirmed or is denied, as the case may be.

Mr. Walker has evidently overlooked X-Q. 217, and the answer thereto, but as there is no reason to believe that the witness has also overlooked that question and answer, Mr. Chambers desires that his last question be answered.

Mr. Walker still objects to X-Q. 218, as ambiguous, because although the witness may think that he understands it, and may answer accordingly the court may mis-

understand it, or may understand it differently; and may therefore, be misled by the answer.

A. I think that the explanation contained in X-Qs. 215, and 218, would not be necessary to a comprehensive understanding of columns 1, and 2, of Defendant's Drawing, No. 7, but that with the patents specified above the first two columns of that drawing, the drawing could be understood by a man sufficiently skilled in the art to understand the drawings of those patents.

X-Q. 219. Are you not under the impression that more than one patent is specified at the head of the first and second columns of drawing, No. 7, and have you not indeed, been testifying largely under the impression that the Lorenz & Honiss patent, No. 337,966, was referred to on that exhibit drawing?

Adjourned until Tuesday, January 27, 1903, at 11 o'clock A. M.

Tuesday, January 27, 1903, 11 o'clock A. M. Met pursuant to adjournment; counsel present as before.

A. You are quite right in X-Q. 219. In answer to X-Q. 218, and X-Q. 216, I had momentarily in mind, that the Lorenz and Honiss patent, No. 337,966, appeared by number on Defendant's Drawing, No. 7, as that patent was so fully referred to in my explanation of Defendant's Drawing, No. 7, in answer to Q. 24. I did not, however, have this conception in mind, in answering any of the other questions. In view of the correction of this momentary misconception of mine, I believe that an explanation such as is set forth in X-Q. 215, and X-Q. 218, would be necessary for a full understanding of the first and second columns of Defendant's Drawing, No. 7, by a man unskilled in the art of paper bag machinery. But I still believe that to a man skilled in that art, the first and second columns of said drawing, would be sufficiently indicative of their

source of origin, to enable him to trace that source of origin, and clearly understand the first and second columns of said Defendant's Drawing, No. 7.

X-Q. 220. Did you plan the Defendant's Drawings, Nos. 1, 2, and 4?

A. I did not.

X-Q. 221. Speaking of Defendant's Drawing, No. 1, in answer to Q. 25, you say that after the gripping fingers on the oscillating plate E, were withdrawn, and the front gripper C, released, "the blank would be transferred to other mechanism as indicated in the Liddell patent." Did you mean by this, that the transfer would or could be made by the same mechanism illustrated in the Liddell patent?

A. I had in mind, in that statement, only the general scheme of transference, as outlined in the Liddell patent, which patent does not go into the details of such transference and further manipulation very fully.

In the answer referred to, I did not intend to imply any condemnation or approval of that transference mechanism.

X-Q. 222. As a matter of fact, the transferring devices of the Liddell patent, would remove the blank from the carrier cylinder at the same speed with which the cylinder moves; while in case of a machine embodying the construction of Defendant's Drawing, No. 1, the blank would have to be removed at a greatly accelerated speed, is it not so?

A. It would certainly be desirable to remove the blank from the mechanism of Defendant's Drawing, No. 1, at a speed greater than that of the periphery of the cylinder, and I see nothing prejudicial to this increased speed of removal in the drawings of the Liddell patent, in so far as they relate to the removal of previously severed bag blanks.

X-Q. 223. (Question repeated.)

A. It is not, to my mind, clearly shown in the drawings of the Liddell patent, that the transferring devices would

remove the blank from the carrier cylinder at the same speed with which the cylinder moves; this part of those drawings being shown in the barest outline only. I do think, however, that it was the obvious intention so to remove. In the mechanism set forth in Defendant's Drawing, No. 1, I think that the blank would not have to be removed at a greatly accelerated speed; but believe it would be desirable so to remove.

X-Q. 224. Referring now to the Defendant's Drawing, No. 8, which is spoken of at great length in your answer to Q. 27, please tell me whether you planned and directed the making of this drawing, or whether, like the others, it was planned and prepared by others, and if so, by whom?

A. I partially planned and directed the making of this drawing. The drawing partially planned and made, was submitted to me by defendant's counsel, when I added some features to it.

X-Q. 225. What are the features you added to the drawing prepared by Mr. Walker?

A. Defendant's Drawing, No. 8, was submitted to me in a partially made condition; I added cams in view A, of figure 4, of the first column; some details to figure 3, of the middle column; and some details to figure 1, of the third column. Other than these, and reference characters, I do not know that I contributed to this drawing.

X-Q. 226. The first column of this drawing is entitled "Prior Art"; and in your answer to Q. 27, you have compared the figures of this column, sometimes with the figures of the middle column, which is supposed to represent parts of the Liddell machine, with a view of showing that such individual parts of the Liddell machine were not new; and sometimes with the figures of the third column, purporting to represent parts of the defendant's machine, with a view of showing that such parts were more or less like parts shown in the prior art column. Now, please state whether, in your judgment, and according to your

knowledge, the first column of this Defendant's Drawing, No. 8, is in any sense a full exposition of the prior art in its bearings, either upon the Liddell patent, or upon the defendant's machine?

A. In my judgment, the first column of the Defendant's Drawing, No. 8, is certainly not a full exposition of the prior art, either as related to the Liddell machine, or the defendant's machine, or both, or to other paper bag machines. The purport of that drawing is to compare or contrast, as the case may be, details of the prior art with details of the Liddell machine, and the defendant's machine.

X-Q. 227. In your answer to Q. 27, you say with reference to the first figure of the third column of Defendant's Drawing, No. 8, "it will be seen that but a small portion of defendant's conveyer conforms to the periphery of the cylinder." And you further say "And it will presently be shown that such conformity is in no way essential to the proper performance of the functions of said carrier." Now, as a matter of fact, the carrier does conform to the surface of the cylinder at all times, except when it is operated upon by the depressed portion of the cam shown at 59, in the drawing; is it not so?

A. It does so conform, except when operated upon by the depressed portion of the cam 59.

X-Q. 228. Please look at the Walker Model-Room Machine, and make an estimate as to the relative portions of the traveling carriage in which it conforms, or substantiallyconforms to the surface of the cylinder, and in which it substantially diverges therefrom; and state also, about what the maximum divergence from the surface of the cylinder is?

A. The oscillating carrier of the Walker Model-Room Machine is in substantial coincidence with the periphery of the conveyer or cylinder, during about nine-tenths of

one whole revolution of the cylinder; but said oscillating carrier is traveling idly in space during about two-thirds of such complete revolution of the cylinder. Said oscillating carrier is out of conformity to the periphery of the cylinder, about one-tenth of the whole revolution of the cylinder, and during all of the time of its coaction with the tucker plate. The maximum divergence of said oscillating carrier from conformity with the periphery of the cylinder, is slightly more than one-quarter of an inch, at its rear end.

X-Q. 229. What is approximately the divergence of the carrier from the surface of the cylinder, on the line where the side grippers engage the paper on the carrier?

A. One-eighth of an inch, or slightly more.

X-Q. 230. Now take the Defendant's Exhibit, Claussen Exhibit No. 3, and state, assuming that the cylindrical carrier is of the same diameter as in the defendant's machine, about how far the grippers on the carriage in the machine, of Claussen Exhibit, would diverge from the surface of the cylinder?

A. About two inches.

X-Q. 231. That is, the divergence of the grippers from the face of the cylinder, is only about one-sixteenth in the defendant's machine, as compared with the machine of Claussen Exhibit No. 3?

A. The divergence of that part of the oscillating conveyer of the defendant's machine, which co-acts with the side grippers, is only about one-sixteenth as much as that set forth in the free-hand drawing, made to no exact scale, in Claussen Exhibit No. 3.

X-Q. 232. It is true, is it not, that the speed with which the blank moves is determined by the distance from the center of the cylindrical carrier of the part of the carriage to which the rear portion of the blank is held? That is to say, for illustration, if the rearmost point of the blank engaged to the carriage, is that engaged by the side

grippers, the speed of forward feed will vary as the carriage moves to or from the center of the cylinder ?

A. That would depend upon what part of the bag blank was considered. The forward end, that held by the front gripper, would travel at substantially the same speed as the conveyer or cylinder ; but that part of the blank held by the side grippers, would vary in its speed with the oscillation of the carrier, as would also, more or less, such portions of the blank as are in the rear of the side grippers.

X-Q. 233. The arrangement of the defendant's machine is such that there is in fact no variation in the speed of the blank as a whole, due to the in and out movement of the carrier, and because at the time the carriage moves in and out, the rear portion of the blank, is supported on the surface of the carrier cylinder, and therefore, moves with the same speed as the front end of the blank, is it not so ?

A. In the Walker Model-Room Machine, there is a quite appreciable variation in the speed of the blank as a whole, due to the oscillatory movement of the carrier.

X-Q. 234. But whatever slack occurs from this cause, is almost immediately taken up by the portion of the cylinder in the rear of the carrier coming in contact with the paper? Is it not so ?

A. As I observe the action of the Walker Model-Room Machine; I do not see that there is any slack in the blank taken up by the portion of the cylinder in the rear of the carrier.

X.Q. 235. We have seen that by contrasting the Claussen Exhibit, No. 3, to the Walker Model-Room Machine, Mr. Claussen has reduced the vibration of the carrier at the point where the grippers engage the paper, from about two inches, to about one-eighth of an inch. Now, so far as the distention of the paper tube is concerned, would it not have been perfectly feasible for Mr. Claussen to

have omitted all vibration of his carrier, while still retaining a fixed axis of oscillation for his forming or tucker plate?

A. In view of the free and sketchy construction of the Claussen Exhibit, No. 3, I cannot see the basis for so specific a deduction as to the vibration of the oscillating carriers of this Exhibit, and the Walker Model-Room Machine, respectively. It is, nevertheless, plain to me that there is an obvious and marked reduction in the oscillation of the carrier of the Walker Model-Room Machine from that set forth in the Claussen Exhibit, No. 3. It would not, in my judgment, have been feasible to omit all oscillation of the carrier in its co-action with the tucker plate of the Walker Model-Room Machine, in the opening out of the mouth of the tucked paper tube.

X-Q. 236. That is, you think Claussen, in the Walker Model-Room Machine has conformed the motion of his carrier just as closely to a circular path as it is possible for him to do? Is that the case?

A. I believe that Claussen could have made the carrier of the Walker Model-Room Machine conform permanently to the periphery of the cylinder or conveyer, if he had provided suitable means to co-act therewith; but that some oscillation is necessary to enable the carrier of the Walker Model-Room Machine to co-act with the tucker plate of that machine, and that said carrier has as little oscillation as is practicable, in its co-action with said tucker plate.

X-Q. 237. In your answer to Q. 27, you make a comparison between what you are pleased to call the aggregation of Figure 3, of the middle column of Drawing No. 8, and the mechanism for vibrating the tucker plate in the defendant's machine. Now in order to enable the working edge of the tucker or forming plate in Liddell's machine, to follow a point on the surface of the cylindrical carrier; Liddell shows mechanism not only for oscillating his carrier, but also for vibrating the pivot about which it

oscillates; and in order to maintain a similar co-acting point in his (the defendant's machine) Mr. Claussen has provided mechanism for vibrating the portion of the cylinder or carrier in connection with which the tucker or forming plate acts. For a fair comparison as to complexity in the two machines, do you not think that the mechanism for vibrating what has been called the carrier in the defendant's machine, should be included with the mechanism for vibrating the tucker or forming plate?

A. I think it would make a fairer comparison, as to complexity, in the mechanism shown in Defendant's Drawing, No. 8, if Figure 3, of the third column of that drawing had shown the mechanism for vibrating the defendant's oscillating carrier; but only as to such complexity. And even with such addition to Figure 3, of the third column of Defendant's Drawing, No. 8, said figure would still have a marked advantage in simplicity and directness of action over Figure 3, of the middle column of said Defendant's Drawing, No. 8; as the addition to Figure 3, of the third column thereof, would include, at most, not more than two or three additional elements, and those of simple construction and direct action.

X-Q. 238. Taking into consideration both the mechanism for oscillating the tucker or forming plate, and that for oscillating the carrier, in the Walker Model-Room Machine, how would the complexity of the said defendant's machine, compare with the mechanism for oscillating the tucker or forming plate shown in the subordinate patent to Liddell, No. 564,288, of July 21, 1896, a copy of which I now show you?

Mr. Walker objects to this question, because it erroneously denominates the Liddell patent, No. 564,288, as being subordinate to the Liddell patent, No. 558,969; whereas, it appears upon the faces of the two patents, that the Liddell patent, No. 564,288, was applied for sixteen days before the Liddell patent, No. 558,969, was applied

for, and because the Supreme Court of the United States decided, in the case of the Barbed Wire Patent, 143 U. S., 281, that where a plurality of approximating original patents have been granted to one inventor, the patent which was applied for last, even if granted first, will be treated as the junior patent; since the dates of applications, and not the dates of the patents, control in determining the legal effect to be given to two patents issued at different dates, to the same inventor, and the order in which those two patents are to be considered as occupying in the art.

Mr. Chambers states that he believes Mr. Walker to be in error, both as to the facts and the law applicable thereto, but will reserve his remarks until the argument of the case, if Mr. Walker's objection then seems to be material.

A. I think their complexity would be about the same.

X-Q. 239. Have you heretofore made yourself familiar with this Liddell patent, of July 21, 1896?

A. I have heretofore made myself fairly familiar with the Liddell patent, No. 564,288, of July 21, 1896.

X-Q. 240. And did you have this knowledge when you gave your direct testimony in this case?

A. I did.

X-Q. 241. Referring now to the Defendant's Drawing, No. 9, about which you are mainly concerned in your answer to Q. 28, please state whether this drawing was originated and planned by you or by some other, and if the latter, by whom?

A. In the main, this drawing was not originated and planned by me, but was submitted to me, by the defendant's counsel. I added some few details to the middle column thereof, and the various reference characters.

X-Q. 242. Have you ascertained whether the measurements and proportions of the first column of Defendant's Drawing, No. 9, conform to either the Claussen Exhibits, Nos. 1, 5, or 3?

A. I have not measured these up with tools; but I have compared them very closely and critically, and believe they conform substantially to such exhibits as they have been set forth to conform with.

X-Q. 243. With which of the Claussen originals do they in fact conform according to your belief?

A. The figures in the first column of Defendant's Drawing, No. 9, according to my belief, conform substantially with, or are legitimately deducible from, Claussen Exhibit, No. 3.

X-Q, 244. In your answer to Q. 28, you said these figures of the first column corresponded with Claussen Exhibit, No. 3, in every particular save two, which you specify. Now, are you not mistaken in this, and is it not a fact, that the drawings of the first column of Defendant's Drawing, No. 9, show the recess in the carrier cylinder so placed and of such size, that the tucker or forming plate P can and does pass into it, and is thus enabled to make its oscillatory movement; while in the Claussen Exhibit, No. 3, the recess is so placed that the tucker P, could not pass into the recess, but on the contrary abuts against the face of the cylinder?

A. There is, in the first column of Defendant's Drawing, No. 9, and the Claussen Exhibit, No. 3, a slight difference in the action of the tucker plate P, which you mention, and which I failed to note in my answer to Q. 28. There is also a slight interference between the tucker plate P and the cylinder of the Claussen Exhibit, No. 3, which heretofore escaped my attention, and which does not appear in the first column of Defendant's Drawing, No. 9.

X-Q. 245. In fact, the slight difference which escaped your attention, is one which would prevent the machine of the Claussen drawing from operating, is it not?

A. Undoubtedly, until the recess in the cylinder was slightly enlarged.

X-Q. 246. You do not find in any of the Claussen Draw-

ings, referred to in Q. 28, any provision made for operative means, capable of co-acting with the tucker or forming plate, and supporting the blank on the under side, while it is being acted upon by said tucker, do you?

The question is objected to as ambiguous, because it is uncertain whether it calls for co-relating mechanism, between the tucker plate above the paper and the carrier under the paper on the one hand; or whether on the other hand, it is confined to the parts which touch the paper, and does not include mechanism for co-relating the motions of those parts.

A. In the Claussen Exhibit, No. 3, I consider that the oscillating carrier 6a, and the heel of the opening in the cylinder 6, co-act with the tucker plate to support said blank on its under side, during the operation of the tucker plate on the upper side. I think figure 4, of the Claussen Exhibit, No. 2, substantiates this view.

X-Q. 247. How do you reconcile this last answer with the fact that Claussen Exhibit, No. 3, shows the tucker coming down on the surface of the cylinder, and not into the recess therein, while Claussen Exhibit, No. 1, shows absolutely no carriage of any kind operating in connection with the oscillating tucker?

A. In figure 4, of the Claussen Exhibit, No. 2 (which is a tracing from the Claussen Exhibit, No. 1), although there is neither a carrier shown under the forward end of the bag blank, nor supporting means at the back thereof, both of these means are clearly suggested by the position in which the bag blank is shown. As to the Claussen Exhibit, No. 3, I think the interference of the tucker plate P, and the cylinder 6, was overlooked, as this whole drawing is roughly made, and intended only to set forth the salient features of the invention, without going into the specific construction or design of the various details.

X-Q. 248. As as a matter of fact, you find in Claussen Exhibit, No. 5, and the tracing thereof (Claussen Exhibit,

No. 6), the same interference between the oscillating tucker and the cylinder, that is shown in Claussen Exhibit, No. 3, is it not so?

A. This pencil drawing is so crude in some respects, that it is rather difficult to read some of its features fairly; but there seems to be a similar interference in the sketch of the Claussen Exhibit, No. 5, between the tucker plate, and the faint outline of the cylinder.

X-Q. 249. Taking the Claussen Drawings, Nos. 5 and 3, as you find them, and not improving on or varying from Mr. Claussen's representation of his own conception, the drawings present in effect a mechanical problem, in that the machine obviously would not operate as shown, and two of its mechanical solutions would, I think, occur to any skilled mechanic, to wit; either to recess the carrier cylinder, to permit the passage of the tucker edge, or to give the tucker itself an additional motion, which would enable it to pass over the surface of the cylinder, in its oscillations. Do you not as a skilled mechanical engineer, agree with me in this matter?

A. I agree with you only partially; in that the two solutions suggested are not, by any means, in the same class. The former being simple and direct, and the latter complex and indirect.

X-Q. 250. But, apart from your opinion as to relative advantages of the two plans, I understand you to agree with me in thinking that they were both obvious?

A. I would not characterize the second one as obvious. As I cannot imagine a man capable of designing the machine set forth in Claussen Exhibit, No. 3, as floundering to the extent of ignoring the first solution, which appears to be obvious, and taking up the second suggested solution, with the marked changes it would probably involve.

X-Q. 251. The question I want you to consider and answer is simply this: Having planned the machine to the extent shown in the two Claussen Exhibits, and developed

the interference shown in both of them, was it not perfectly evident that there were two ways of avoiding that interference, one by removing the carrier cylinder at the point where it interfered, and the other by so manipulating the tucker that it could travel over the unmutilated cylinder. I wish you to dismiss from your mind the consideration of the relative advantages of these plans in a paper bag machine, and to answer the question simply from a mechanical point of view, and as a mechanical engineer, and not an expert in paper bag machinery?

This question is objected to as being identical in scope to X-Qs. 249 and 250, taken together, which questions were fully answered in the replies thereto, however unsatisfactory to Mr. Chambers those answers may have been.

The above statement objected to as an attempt by defendant's counsel to lead his witness, and prevent a responsive and intelligent answer thereto.

A. I consider the relative advantages of the plans as inherent in the proposition, and that as a mechanical engineer, I cannot give a fair answer to the question, divorced from such relative advantages. I believe that the second solution would not occur to a mechanical engineer in his connection, in view of the fact that the first solution is so obvious and full a solution. This, I think, is true whether the mechanical engineer was or was not an expert in paper-bag machinery.

X-Q. 252. I am then to understand, that you give it as your opinion, that had the problem of the Claussen drawing been presented to you, you would not have recognized that the interference could be avoided by giving the oscillating tucker such a motion as would enable it to follow the surface of the cylinder?

A. I think the proposition would not have presented itself to my mental recognition; as the other solution would have been so obvious to me as to preclude the necessity or desirability of any other solution.

X-Q. 253. It appears that the adoption of what you think is the obvious solution, by Mr. Claussen, was complicated by what he appears to have considered the need of providing some co-acting mechanism to support the blank immediately beneath, and while being operated on by the tucker, and the carriage 56 of the second column of the Defendant's Drawing, No. 9. Have you taken into consideration the need or desirability of such a device, in assuming that the plan of recessing the cylinder was obvious?

Mr. Walker asks Mr. Chambers to state *where* it is that the things appear, which are said in the first sentence of X-Q. 253. to appear.

Mr. Chambers states that this sufficiently appears in the Claussen patents, and the Claussen machine, in Mr. Walker's model-room.

Mr. Walker objects to the question, because the appearances suggested in the first sentence of X-Q. 253, are hypothetical appearances, and even as hypothetical appearances, they are not clearly described or defined in the question.

A. I have taken into consideration the need or desirability of such a device, in my consideration of the plan of recessing the cylinder; and I consider that that need or desirability would be attended to, as a subsequent problem in the development of this mechanism to its final form.

Adjourned until Thursday, January 29, 1903, at 11 o'clock A. M.

Thursday, January 29, 1903, 11 o'clock, A. M. Met pursuant to adjournment. Present, L. F. H. Betts, counsel for the complainant; and Albert H. Walker, counsel for the defendant; and Mr. Walker consents that the cross examination of the witness may be continued by Mr. Betts, though it has thus far been conducted by Mr. Chambers, as counsel for the complainant.

X-Q. 254. Will you please operate the specimen of defendant's machine, which is illustrated in the Walker Model-Room Machine; and produce before the Notary Public, the first twenty-five bag blanks which you make with that machine. In doing so, I shall be glad to have you use any paste or mucilage to close the parts together, if you think it advisable to do so?

A. The Walker Model-Room Machine is not in proper condition to be operated for the making of paper bag blanks or paper bags, for the following reasons:

It is not provided with pasting devices, without which a suitable tucked paper tube cannot be made. Also the bottom of the bag cannot be completed without the diamond pasting mechanism. And while these pasting operations could be done, after a fashion, by hand, they cannot be done satisfactorily in that manner. Furthermore, the Walker Model-Room Machine has not had its several parts finally adjusted for co-action, since it reached its present form, and its co-action has been still further deranged by handling and removal of parts for inspection, during its sojourn in Mr. Walker's model-room. In view of these facts, the machine is not properly attuned for the making of paper bags or paper bag blanks. The co-acting mechanisms for such a machine are in many cases so inter-dependent, that the whole machine requires considerable "tuning up" before it is in condition to properly perform its functions. I herewith present, however, a series of 57 paper bags made on the defendant's fifty-seven machines,

respectively, in the factory at Rumford Falls, Maine; and which bags I saw made there by said machines, which machines have been referred to a number of times in my deposition. The pencilled numbers on these fifty-seven bags refer to the factory numbers of the machines on which the bags, respectively, were made, there being one bag of the fifty-seven made on each machine of the fifty-seven.

Complainant's counsel objects to so much of the answer beginning with the words "I herewith present" as volunteered and irresponsive.

X-Q. 255. What parts of the Walker Model-Room Machine need to be finally adjusted for co-action?

A. The adjustment of the Walker Model-Room Machine, to put it properly in tune, would probably require a slight adjustment of a number of its parts; all of which I would not be able to specify without going through such adjustment in connection with the proper pasting devices.

X-Q. 256. What parts of this machine had you in mind when making your answer to X-Q. 254?

A. I had in mind, among others, the tube-making mechanism, and the diamond folding mechanism.

X-Q. 257. The Walker Model-Room Machine is provided with this tube-making mechanism, is it not?

A. The Walker Model-Room Machine is provided with a tube-making mechanism, with the exception of that part which does the pasting, which part is lacking in said machine.

X-Q. 258. Does the tube-making mechanism which is now provided upon the Walker Model-Room Machine need to be adjusted?

A. More or less, it does.

X Q. 259. Will you please operate this machine, and produce the first twenty-five bag blanks which are then made by this machine. You may adjust the tube-making mechanism and the diamond folding mechanism, if you

care to do so, and you may use paste in order to connect together by hand the different parts of the bag blanks?

Mr. Walker objects to the question, as not proper cross examination; and also because the Walker Model-Room Machine, has been proved by the testimony of this witness, to be not now adapted to produce the bag blanks called for by the question. And Mr. Walker instructs the witness to answer the question in the negative.

Complainants object to the instruction given the witness by Mr. Walker, and asks Mr. Walker by what right he interferes with the cross examination of this witness; and submits to the court that this is but another instance where Mr. Walker has not allowed complainant to fully and fairly cross examine the witness.

Mr. Walker states that he has never done or said anything toward disallowing the complainant to fully and fairly cross examine the witness. And Mr. Walker states that his right to instruct the witness not to attempt to operate the Walker Model-Room Machine, is based upon the fact that the witness in his direct examination, said nothing about having operated or attempted to operate that machine in the manufacture of paper bag blanks or paper bags; and upon the fact that a request to the witness on cross examination to do something in the future, and to report the result of that future doing, is not proper cross examination (cross examination necessarily always referring to the past); and upon the fact that the witness has testified that the Walker Model-Room machine is not now adapted and attuned to produce paper bag blanks or paper bags.

Mr. Walker states to the court that in order that the diamond forming mechanism of the Walker Model-Room Machine may produce diamond formed paper bag blanks; that mechanism must be supplied with tucked paper tubing, having its pasted seam held together with sufficient firmness to enable the diamond folding mechanism to

operate thereon ; and that that result requires a uniform application of paste of a proper character and consistency, and cannot be attained, with any certainty and uniformity, by applying paste or mucilage, with a brush or by hand, to the borders of the paper, which are to be held together. Furthermore, Mr. Walker states to the Court that the Walker Model-Room Machine was brought directly to the Walker Model-Room from the Garvin Machine-Shop, for the purpose of being examined and understood by counsel and experts on both sides in this suit, and not for the purpose of being used to make paper bags or paper bag blanks ; and that it is well known to those who have had practical experience in starting new paper bag machinery running, that such machinery, however perfect in itself, requires adjustment, so nice as to be analogous to the tuning of a piano, before it can produce its appointed product with its normal perfection ; and Mr. Walker states to Mr. Betts, if he has any inclination to doubt or deny this necessity of nice judgment, that Mr. Walker will immediately, with Mr. Betts' consent, telegraph to William H. Honiss, of Hartford, Connecticut, one of the experts of the Union Bag & Paper Company, who has had extensive experince in making such adjustments, to come to New York, tomorrow morning, and give a deposition on that subject.

Complainant's counsel again protests and objects to Mr. Walker testifying in this case, under the guise of a statement to the court, since Mr. Walker is not upon the witness-stand and subject to cross examination by complainant's counsel, and calls attention to the fact that the alleged facts stated in this testimony of Mr. Walker were not mentioned by the expert mechanical engineer, Mr. Stone, who is on the witness-stand, in his answer to X-Q. 254.

Complainant's counsel submits to the Court that the question is proper cross examination since, in the direct examination, the witness was asked by Mr. Walker, to

compare the Walker Model-Room Machine, with certain other machines, such as the Stilwell machines, the Lorenz & Honiss machines, the machine of the Liddell patent in suit, and to then state what, in his opinion, were the comparative merits of these machines ; and the purpose of this question is to verify the correctness of his testimony by an actual demonstration of the merits of the Walker Model-Room Machine, since complainant's counsel believes that that machine will not produce five merchantable blanks out of twenty-five. Complainant's counsel asks Mr. Walker whether he still adheres to his instruction to the witness.

Mr. Walker replies that in the direct examination, the questions which were put to the witness about the comparative merits of the Walker Model-Room Machine, and the Stilwell machine, and the Lorenz & Honiss machine, were purely theoretical questions, and neither they nor the answers thereto, purported to be based upon use of either of those machines by the witness. And Mr. Walker adds that the correctness or incorrectness of such testimony as the witness gave in respect of those comparative merits, cannot be demonstrated by the witness in pursuance of what he was requested to do in X-Q. 254 or in pursuance of what he was requested to do in X-Q. 259, because, as this witness has testified, that machine is not now in a condition to do its appointed work.

Mr. Walker states to the court, that the statements made by him in the fourth paragraph above this paragraph, are not in the nature of testimony, but are rather in the nature of pleading. And Mr. Walker suggests that those statements were not made by the witness in response to the questions put to him by Mr. Betts ; partly because those questions did not call for so full an explanation, and partly because the witness may not have known all the facts stated in that paragraph, not having had any experience in starting new paper bag machinery running com-

mercially, and not having stated himself to be an expert in adjusting or attuning such paper bag machinery for actual work.

Mr. Walker adds that since he made the statements in the said fourth paragraph above the last paragraph, he has telegraphed to William H. Honiss, of Hartford, Connecticut (who is one of the experts of the Union Bag & Paper Company, and who is known by Mr. Walker to have had very extensive experience in tuning and adjusting square bottom paper bag machinery), to come to New York to-morrow and testify on behalf of the defendant in this case; and that he fully expects Mr. Honiss to come, and to give full information upon the subject of adjusting self opening square paper bag machinery.

Mr. Walker further states to the court that there is no such thing as a "merchantable" diamond formed paper bag blank; and that such paper bag blanks are never sold in the market, and that no individual blank of that kind ever has an existence longer than a fraction of one second of time, in the manufacture of self-opening square paper bags; and that a diamond formed paper bag blank suitable for that purpose, must be made accurately, or the resulting bag will be imperfect; and that whatever diamond-formed paper bag blanks might be produced by the witness in response to X-Q. 254, or in response to X-Q. 259, in the Walker-Model-room machine, in its present condition, would probably all be so imperfect that that machine would not produce, in its present unadjusted condition, even one merchantable square bottom paper bag out of twenty-five, or out of twenty-five thousand.

And Mr. Walker submits to the court, that it was absurd for Mr. Betts to propose to demonstrate the inutility of the defendant's self-opening square paper bag machines, by asking this witness to try to run the Walker Model-Room machine in its present unadjusted condition; and that

it was particularly absurd to so propose, after this witness had produced a good merchantable self-opening square paper bag which he testified he himself saw made on each of the fifty-seven similar machines in the defendant's paper bag factory, making fifty-seven good merchantable bags in all, thus produced by the witness.

For the foregoing reasons, Mr. Walker submits to the court, that his instruction to the witness to answer X-Q. 259, in the negative, was a proper instruction; and Mr. Walker again instructs the witness that it is his duty to answer that question in the negative.

Complainant's counsel again objects to Mr. Walker testifying in this case under the guise of a "suggestion" or a statement to the court, since Mr. Walker is not upon the witness-stand, and not subject to cross examination by complainant's counsel. Complainant's counsel again objects to the statements of Mr. Walker being made in the hearing of the witness, since they are leading and indicative of the answers which Mr. Walker desires the witness to make, and the reasons which the witness should give for making this answer.

Complainant's counsel submits and objects to the consideration of the fifty-seven bags referred to by the witness, because they were not made in the presence of complainant's counsel or its experts, and since but a single bag is produced from a single machine, which is no test of the operativeness or utility of any one or all of said fifty-seven machines.

A. In compliance with the instructions of defendant's counsel, I answer X-Q. 259 in the negative.

X-Q. 260. I understand then, that you decline to operate the machine as called for in X-Q. 259? And that your sole reason for so doing, is because Mr. Walker instructs you not to do so?

Mr. Walker asks Mr. Betts to state what foundation he has for saying that he understands that the sole reason of

the witness for declining to operate the machine as called for in X-Q. 259, is because Mr. Walker instructs him not to do so; and on this point, Mr. Walker calls the attention of Mr. Betts to the fact that the witness has testified that the machine is not now in condition to properly perform its functions; and is not in proper condition to be operated, for the making of paper-bag blanks, or paper bags; and has stated in reply to X-Q. 254, a considerable number of particulars in which the Walker model-room machine is not now in proper condition to operate.

Complainant's counsel again objects to Mr. Walker's indicating to the witness by a statement within the hearing of the witness, the character of the answer which he desires shall be given to the present question. And complainant's counsel calls attention to the terms of X-Q. 259.

A. Your understanding is correct as to the fact of my declining to operate the Walker Model-Room Machine as called for in X-Q. 259; but Mr. Walker's instruction was not my sole reason for so doing, my other reasons being set forth, partially, in answer to X-Q. 254. In further answer to X-Q. 259, I state that the adjusting of the tube-making mechanism, and diamond-folding mechanism, is not the matter of a few moments; but that it would probably take some considerable time to make these adjustments, and such others as might be necessary or desirable.

X-Q. 261. How long would it take you to make these adjustments?

Question is objected to as not proper cross examination, because it refers to a department of experience and knowledge about which in the direct testimony, the witness was not called upon to make any statement, and did not make any statement; and because it does not appear that the witness ever had any such experience as might enable him to judge how long it would take him to adjust the Walker Model-Room Machine, and to supply it with the missing

tube-pasting apparatus and to do all this so accurately, as to enable that machine to be operated for the making of paper bag blanks or paper bags.

A. I do not know. I have not basis enough to answer the question, as I do not know how much preliminary investigation and subsequent work would be required to enable me to make the proper adjustments.

Complainant's counsel calls the attention of the Court to the fact that the objection of Mr. Walker made within the hearing of the witness bore fruit, in that the witness in his answer followed the suggestion of Mr. Walker, as to the character of the answer which the witness should give.

Mr. Walker calls the attention of the Court to the fact that the last statement of complainant's counsel constitutes an unfounded insult to the gentleman who is on the stand, in implying that that gentleman will testify to any statement that he thinks Mr. Walker wants to prove; and Mr. Walker suggests that the statements in the answer to X-Q. 261, are so obviously true, that no two gentlemen who are looking each other in the face, could say that they expected or could expect the witness to make a substantially different answer to X-Q. 261, even if that question had not been objected to within the hearing of the witness.

X-Q. 262. You were informed on Tuesday night, last, day before yesterday, by Mr. Chambers and myself, that the substance of X-Qs. 254 and 259, would be put to you this morning as a cross-question, were you not?

A. Such a statement was informally made within my hearing.

X-Q. 263. And between that time and this morning, did you make any attempt to adjust the Walker Model-Room Machine or to attune the same?

A. Between that time and this morning, I made some experiments with the Walker Model-Room Machine to determine its then condition, with a view to ascertaining how

much out of adjustment it was. I made one or two slight adjustments of the tube-folding mechanism, in the matter of the delivery of the paper from the roll to that mechanism. Other than this, I made no adjustments or attempts at adjustments on this machine.

X-Q 264. Is it your opinion, then, that only such blanks as are automatically pasted in a paper bag machine, are suitable for drawing into the diamond fold or form?

A. Not by any means. But that the automatically pasted blanks have a uniformity that is highly desirable, in enabling the machine to properly perform its functions.

X-Q. 265. Is it your opinion that a paper bag machine which was not provided with means for automatically pasting paper bag blanks would not uniformly produce suitable diamond folded or formed blanks?

A. It is my opinion that there are some types of paper bag machines that would produce suitable diamond folded bags of highly uniform character, without automatic pasting devices.

X-Q. 266. Have you any such machine in mind?

A. I have no specific machine in mind; but had in mind such machines as were provided with mechanism which would temporarily hold together such parts of the paper bag blank as are usually pasted.

Cross examination closed.

Re-direct examination by Mr. Walker:

R-D-Q. 267. Please to state the factory numbers of the fifty-seven self-opening square paper bag machines referred to in your answer to X-Q. 254?

Objected to as immaterial.

A. The factory numbers of the fifty-seven machines referred to, are from 72 to 130, inclusive, with the exception of No. 75 and No. 79.

R-D-Q. 268. In what way, if at all, were those fifty-seven numbers marked on those fifty-seven machines re-

spectively, when you saw those machines in the Rumford Falls factory?

A. These fifty-seven numbers were painted on the machines in white paint, and in such positions on the several machines, as to prominently appear; the height of the figures used, being about five inches.

R-D-Q. 269. About how high, from the floor, did the tallest of those fifty-seven machines reach?

A. I should say from seven to possibly eight feet.

R-D-Q. 270. What were the numbers of those of the fifty-seven machines which correspond in size with the Walker Model-Room Machine, in respect of the width of the tucked paper tube made in those machines, and delivered to the diamond-folding mechanism thereof, respectively?

Complainant's counsel objects to this question, if it is intended to lay a basis for proof as to the utility or commercial operativeness of any of defendant's machines, because neither complainant's counsel nor its experts have been given, or have had any opportunity to examine or see any of said machines other than the Walker Model-Room Machine.

A. Nos. 77, 78, 80 and 81, respectively.

R-D-Q. 271. What is the width of the tucked paper tube which those four machines make and use?

Same objection.

A. About three and one-half inches.

R-D-Q. 272. Please now to produce the fifty-seven paper bags which you presented when making your reply to X-Q. 254?

Objected to as immaterial and incompetent.

A. I herewith produce the fifty-seven paper bags asked for, and to which I referred in my answer to X-Q. 254.

R-D-Q. 273. I observe that the fifty-seven paper bags which you have produced, in response to the last question, are numbered 72 to 130, inclusive, except that there

is no bag numbered 75, and no bag numbered 79; and I ask you to state in whose handwriting are those numbers on those fifty-seven bags?

Same objection.

A. The numbers on those fifty-seven bags are in my own handwriting in pencil; and these bags were so numbered, as I went from machine to machine, gathering them at the paper bag factory of the Continental Paper Bag Company in Rumford Falls, Maine.

R-D-Q. 274. Please to estimate and state about how many self-opening square paper bags, like the fifty-seven which you have produced, were being manufactured per day on the fifty-seven machines to which you have referred, when you saw those machines running, in November, 1902?

Objected to as incompetent, and immaterial. No foundation has been laid for this question, nor does it appear that the witness has sufficient knowledge or information to make the estimate called for, since it does not appear that the witness is or ever has been an officer or an employee of the Continental Paper Bag Company in its factory at Rumford Falls where these machines were.

A. Based on my careful observation of the performance of these machines, which observation extended over several days; I estimate that these fifty-seven machines were producing in the neighborhood of two and one-half millions of bags per day.

R-D-Q. 275. Please to go through with the fifty-seven bags, and mark your initials W. M. S., under the number which you have already marked on each of those bags?

Complainant's counsel objects to this question as immaterial and incompetent. Attention is called to the fact that Mr. Walker has declined to agree to produce the Walker Model-Room Machine in Court, and he has instructed the witness not to operate the Walker Model-Room Machine, in the presence of complainant's counsel, to produce twenty-five resulting products of that machine,

and complainant's counsel objects to any testimony as to the merits or demerits, of any other machine which complainant's counsel has not been permitted to see, nor has his expert been permitted to see.

A. I have done so.

Mr. Walker offers in evidence the fifty-seven paper bags which have been produced by the witness, and marked with his initials, and requests that the whole of them be treated as one exhibit, and marked "Defendant's Exhibit, Assortment of Self-opening Square Paper Bags," and they are accordingly so marked.

Complainant's counsel objects to the offer of the foregoing exhibit, and to the exhibits themselves, as immaterial, irrelevant, incompetent, and liable to mislead; since as the records shows, there is but a single bag produced from any one machine, and complainant's counsel again objects to this apparent attempt to prove the merit of machines which neither complainant's counsel nor its experts have had an opportunity to examine, nor were these bags made in the presence of either of complainant's counsel or experts, especially in view of the fact that Mr. Walker has declined to allow the witness to operate the only machine which complainant's counsel and its experts have had an opportunity to examine, namely, the Walker Model-Room Machine.

R-D-Q. 276. Please to state whether the fifty-seven machines were all actually running making paper bags as you went from machine to machine, gathering up the fifty-seven paper bags which you produced in reply to R-D-Q. 272; or whether all of them were idle at that time; or whether some of them were running, and some of them were idle.

Same objections.

A. I did not gather all of these bags during any one tour of the fifty-seven machines; but I gathered the most of them during one tour of said machines. The fifty-seven

machines were not usually all running at one time, various machines being stopped for replenishing with paper or for other causes; but to the best of my memory and belief, the fifty-seven paper bags produced by me, were made in my presence at one time or another.

R-D-Q. 277. On what principle did you select those particular fifty-seven bags from the total output of the fifty-seven machines?

Complainant's counsel again objects to this question as immaterial and incompetent, and further objects to this question on the ground that it relates to the operation of machines which neither complainant's counsel nor any of its experts have had an opportunity to examine or see, or operate, or see operated, especially in view of the fact that Mr. Walker has instructed the witness not to operate the only machine which either complainant's counsel or its experts have had an opportunity to examine and operate, to wit; the Walker Model-Room Machine.

A. I selected the fifty-seven paper bags referred to, as representatives of the commercial product of the fifty-seven machines respectively.

R-D-Q. 278. I observe that some of the fifty-seven bags are less perfect than some others. For example, No. 104 appears to be more perfect than No. 105, though the two bags are of the same size; and for another example, No. 113 appears to be less perfect than No. 114, though those two bags are of the same size; for another example, No. 77 appears to be more geometrically exact in its folds than either Nos. 78, 80 or 81, though all four of those bags are of the same size; and I ask you to state how you account for these differences of perfection between the bags to which I call your attention?

Complainant's counsel makes the same objections as to the last question and for the same reason.

A. These variations from uniformity of product in machines of the same nominal size, is due to the care or lack

of care of the attendants thereof. The machines are sensitive to various differences in paper, paste and other things, and these slight variations in product occur sometimes on an individual machine, while the operator is giving attention to some other machine, and are corrected when its turn for inspection occurs.

R-D.Q. 279. How many operators were employed in running the fifty-seven self-opening square paper bag machines in the Rumford Falls factory, when you saw those machines, not including the boys or girls or other persons who simply may have taken the bags as they were delivered by the machines, and put those bags into bundles?

Objected to as incompetent and immaterial.

A. In the factory of the Continental Paper Bag Company at Rumford Falls, Maine, the fifty-seven machines for making self-opening square paper bags were arranged in three rows, and there was a general machine foreman for each of these rows. In addition to these, and working under them, there was one helper for each three or four machines, whose duty it was to supply the machines with paper and paste, keep the machines clean, and oiled, and in adjustment.

R-D-Q. 280. About how often was a roll of paper used up by No. 77 of those machines, for example; if you noted and now remember that point?

Same objections.

A. I cannot testify to this point in relation to any of the machines, although I saw a good many rolls of paper put into various machines, but I did not stand by any one machine with a view of noting its time of consumption of any one roll.

R-D-Q. 281. About what was the diameter of a new roll of paper when placed in machine No. 130, to begin a run of paper bags from that roll of paper?

Same objections.

A. From two and one-half, to three feet; as I remember it.

R-D-Q. 282. About what was the diameter of a new roll of paper, when placed in machine No. 72, to begin a run of paper bags from that roll of paper?

Same objections.

A. Not far from two and one-half in diameter. The diameter of the rolls of paper supplied to the various machines did not vary greatly, but varied as to their width.

R-D-Q. 283. What was your observation in respect of the continuity or otherwise with which those fifty-seven machines drew paper from those rolls, and manufactured that paper into self-opening square paper bags?

Complainant's counsel objects to the question as immaterial, irrelevant and incompetent, and as improper since neither complainant's counsel nor its experts have ever seen, or seen operated, or been permitted to operate, any or all of said fifty-seven machines; and this objection is especially pointed out to the Court in view of the fact that Mr. Walker has instructed the witness not to operate the only machine which complainant's counsel or its experts have had an opportunity to examine, and in which there is a roll of paper—to wit, the Walker Model-Room Machine.

A. My observation was that the fifty-seven machines referred to, drew paper from the rolls and manufactured it into self-opening square paper bags, in most instances with a high degree of continuity.

R-D-Q. 284. Suppose you had selected the fifty-seven bags with intention to select the most perfect specimens you could find, of the product of each of the fifty-seven machines. How would the fifty-seven bags have compared, in point of geometrical perfection or otherwise with the fifty-seven bags which you did select and have produced?

Same objections as to the last question, and also as leading and suggestive.

A. The fifty-seven bags selected and produced were not in every instance the most perfect specimens to be had from the several machines. By careful selection among a large number, I could have raised the average quality in this exhibit very materially.

Re-cross examination by Mr. Betts without waiving objections.

R-X-Q. 285. About how high from the floor did the smallest of the fifty-seven machines at Rumford Falls reach?

A. A. little over five feet.

R-X-Q. 286. Upon what did you base your estimate given in answer to R-D-Q. 274?

A. I based my estimate on there being about fifty machines out of the fifty-seven running continuously for ten hours per day.

R-X-Q. 287. How many bags did you estimate that one of these machines made per hour?

A. I estimated that these fifty machines would make an average of about seventy-five commercial bags per minute.

R-X-Q. 288. Were all of the fifty-seven machines, when you saw them at Rumford Falls, operated by power?

A. They were.

R-X-Q. 289. Are you aware of the fact, that the normal waste of the product of the machines of the Continental Paper Bag Company at its factory at Rumford Falls, Maine, is at least twenty per cent.?

Mr. Walker objects to this question because it assumes the existence of an alleged fact, and asks the witness whether he is aware of that fact, instead of asking him whether, as a matter of fact, the waste is twenty per cent., or more; and Mr. Betts is invited to ask the witness directly whether the waste is at least twenty per cent. instead of practically testifying on that subject himself.

Complainant's counsel objects to Mr. Walker's interruption of the cross-examination by his suggestion.

A. I am not aware that the normal waste of the product of the machines of the Continental Paper Bag Company, at its factory at Rumford Falls, Maine, is at least twenty per cent.

R-X-Q. 290. Did any of the officers or employees of the defendant company inform you what the normal waste of their machines was?

Objected to as calling for hearsay; and the witness is instructed not to answer the question for that reason.

Complainant's counsel protests and objects to Mr. Walker's preventing a full cross examination of this witness.

Mr. Walker calls the attention of the Court to the fact that the cross examination of this witness has now extended to about two hundred questions, and that only about twenty of those questions have been objected to, although a much larger number were objectionable according to the law of evidence; and Mr. Walker mentions that it is absurd to demand hearsay testimony from this witness on cross examination, particularly as the subject upon which that testimony is demanded, was not mentioned in the direct examination, or in the re-direct examination.

A. Under advice of counsel, I decline to answer the question.

Complainant's counsel gives notice that in the United States court room, in the Post Office building, City of New York, Borough of Manhattan, in the United States Circuit Court for the Southern District of New York, within whose jurisdiction the witness now is, he will bring on a motion at the opening of the Court, or as soon thereafter as counsel can be heard, upon Friday, January 30, 1903, which is the next motion day of this Court, for an order compelling the witness to answer this question; and requests that the notary certify the record to the Court for the

purpose of passing upon this motion; and complainant's counsel suspends the further examination of this witness until the Court has passed upon this motion.

Adjourned until Friday, January 30, 1903, at 11 o'clock A. M.

Friday, January 30, 1903, at 11 o'clock A. M. Met pursuant to adjournment, counsel present as before; and adjourned until Saturday, January 31, 1903, at 12:30 P. M.

Saturday, January 31, 1903, at 12:30 P. M. Met pursuant to adjournment, counsel present as before, and the witness Stone.

CHARLES E. SMITH, the Notary Public, having made the following certificate on Friday, January 30, 1903, namely:

"I, Charles E. Smith, Notary Public, having authority to act as such in Manhattan, New York, do hereby certify that evidence on behalf of the defendant, in the above-entitled case, has been taken before me in pursuance of a stipulation of the parties, at the office of Albert H. Walker, Floor 25, Park Row Building, Manhattan, New York, beginning on Monday, December 8, 1902, at 11 o'clock in the forenoon, and continuing thereafter by adjournment, from time to time, until and including Thursday, January 29, 1903.

And I further certify that among the depositions thus taken before me, is a deposition of Wilbur M. Stone, which was begun Tuesday, January 13, 1903, and is not yet completed, but comprises the annexed 176 typewritten pages.

And now, in pursuance of the request of complainant's counsel, I hereby certify the relevant record to the Court as above.

CHARLES E. SMITH,
Notary Public."

And now, the Honorable E. Henry Lacombe, having entered an order upon the noticed motion of complainant, as above set forth, this order is spread upon the record as follows:

The motion of the complainant for an order compelling the witness, Stone, to answer R-X-Q. 290, coming on to be heard, upon the certificate of the Notary Public, and the record of said witness' deposition, and the same having been orally presented to the Court, it is

ORDERED, that the objection of defendant's counsel to said question be, and the same hereby is, overruled, and that the witness answer the question.

E. H. LACOMBE,
U. S. C. J.

Cross examination of W. M. Stone resumed by Mr. Betts.

R-X-Q. 291. In pursuance of the foregoing order, I now repeat R-X-Q. 290, which reads as follows:

"Did any of the officers, or employees of the defendant Company inform you what the normal waste of their machines was?

A. They did not.

R-X-Q. 292. Since R-X-Q. 290 was put to you, on Thursday last, have you talked with Mr. Walker, defendant's counsel, concerning the substance of that question?

A. I have not talked with Mr. Walker on this subject; but made one statement to him in regard to it, to wit: that I had no information on the subject. Other than that, I said nothing to Mr. Walker on the subject; and he said nothing to me whatever on the subject.

R-X-Q. 293. When you visited the defendant's factory at Rumford Falls, you observed, did you not, that there were a large number of imperfect bags upon the floor near each machine, or boxes or barrels, in immediate vicinity thereto, which contained such imperfect bags?

A. I saw more or less imperfect bags that were discarded, but I would not characterize them as "a large number."

R-X-Q. 294. Are you aware of what the normal waste is of square bottom paper bags which are made by other Companies such as the Union Bag & Paper Company?

A. I am not.

Cross examination closed.

Mr. Walker states that the direct examination of this witness inadvertently omitted to inquire of him relevant to a certain construction shown in one of the prior art patents in evidence; which inadvertent omission was due to the great extent of the prior art, and due to the fact that Mr. Walker has been so overworked throughout the month of January, that though he was himself familiar with the construction in question, he did not remember, when closing the long direct examination, that he had not questioned the witness relevant thereto. For this reason, Mr. Walker asks permission to resume the direct examination on that particular topic.

Complainant's counsel replies that in his opinion, the proper practice is to recall the witness and ask him questions concerning this topic, and that he has no objection to this course being pursued, immediately; but does object to the direct examination being resumed in this deposition.

Mr. Walker states in his judgment, he has no right to resume the direct examination against the objection of complainant's counsel, and that he has no further question to ask this witness in this deposition.

Deposition closed.

WILBUR M. STONE.

UNITED STATES CIRCUIT COURT,

DISTRICT OF MAINE.

EASTERN PAPER BAG COMPANY

vs.

CONTINENTAL PAPER BAG COMPANY.

Evidence taken on behalf of the defendant, at the office of Albert H. Walker, Floor 25, Park Row Building, Manhattan, New York, beginning on Friday, January 30, 1903, at 11 o'clock in the forenoon, and continuing thereafter by adjournment from time to time; the said evidence being taken before Charles E. Smith, a Notary Public, having authority to act as such in Manhattan, New York; and being taken down by Grace Smith, a typewriter operator; and being thus taken before Charles E. Smith, by Grace Smith in pursuance of the stipulation of the parties which is prefixed to the complainant's evidence and which was made March 6, 1902.

Present: Charles E. Smith, the Notary Public; and L. F. H. Betts, counsel for the complainant; and Albert H. Walker, counsel for the defendant.

WILLIAM H. HONISS, a witness produced by the defendant's counsel, to testify as the defendant's witness, with the same effect as if he had been produced and directed to testify, by a subpœna, being duly sworn, testifies as follows, the direct examination being conducted by Mr. Walker:

Q. 1. Please state your name; residence; occupation; and where and when you were born?

A. Name, William H. Honiss; residence, Hartford, Connecticut; occupation, mechanical engineer and solicitor of patents. I was born in Rocky Hill, Connecticut, in 1858.

Q. 2. Please give an outline of your experience in mechanical engineering, and the other departments of your profession and occupation?

A. My training and experience in mechanical engineering began in 1874. From 1880 to 1883 I was employed by the Pratt & Whitney Company, of Hartford, Connecticut, as a tool-maker, draftsman and designer of machinery. From 1883 to 1887, I was engaged in the work of designing and superintending the construction of automatic paper bag machines, and the necessary machinery and special tools for manufacturing those paper bag machines. From 1887 to 1891, I was in England, and elsewhere in Europe, installing and exhibiting paper bag machines, and I spent several months in the Paris Exposition of 1889 in connection therewith.

In 1891 I returned to the United States, and established a mechanical engineering office in Hartford, Connecticut, which I have continued to the present time. In 1891 I also began the work of soliciting patents, and have continued that work ever since, in connection with my mechanical engineering office.

Q. 3. When, if ever, did I first take your expert testimony on behalf of some client in patent litigation; and when, if ever, did I last take such expert testimony from you?

A. The first occasion which I now recall, on which you took my testimony in connection with patent matters, was in 1883 or 1884; and the last occasion was during the month of December, 1902.

Q. 4. During those nineteen or twenty years, ending with 1902, but not including the four years of your absence in Europe; to what extent, in general, have you and I

worked together in patent litigation, and in other matters connected with Letters Patent for inventions or connected with inventions ?

A. We have worked together in connection with quite a number of causes, occupying in time quite a large number of weeks in the aggregate.

Q. 5. In this case of the Eastern Paper Bag Company *vs.* the Continental Paper Bag Company, I desire to take your testimony in response to two classes of questions, and to pay you on behalf of my client, the Continental Paper Bag Company, for your time and testimony as an expert, at the same rate at which I have been accustomed to pay you on behalf of other clients (or to recommend those other clients to pay you directly) in many other cases during the last nineteen or twenty years. The two classes of questions upon which I desire your testimony are, first, questions which relate to events within your own personal knowledge relevant to the history of paper bag machinery ; and, second, expert questions which relate to similarities and differences between various paper bag machines and paper bag machine patents, and which relate to your opinions of those similarities and differences. Please, therefore, to state whether there is any reason why you should not give testimony on behalf of the defendant in this case in respect of the first classes of questions, and also state whether there is any reason why you should not give testimony on behalf of the defendant in this case in respect of the second of these classes of questions ?

Complainant's counsel states that he understands that the witness has been for several years last past retained by the Union Bag & Paper Company as an expert, and is so retained at the present time. Since, as the record shows the defendant herein, Continental Paper Bag Company, is a competitor of the Union Bag & Paper Company, complainant's counsel submits that it would be improper

for the witness to give the Continental Paper Bag Company the benefit of the witness' expert knowledge or opinions, without the consent of the Union Bag & Paper Company, and therefore Mr. Betts submits to the Court that the witness should not be interrogated as to the second class of questions—namely, expert questions; but Mr. Betts can see no impropriety to the witness being interrogated as to the first class of questions—namely, questions of fact.

A. I know of no reason why I should not give testimony relative to events within my own personal knowledge, as to the history of paper bag machinery; but I have a contract with the Union Bag & Paper Company, for my services as an expert in paper bag and paper bag machine matters, and I think it would not be fair or just, in view of that contract, for me to testify concerning the second class of questions referred to in Q. 5, without the authorization or consent of the Union Bag & Paper Company, which authorization or consent I have not received.

Q. 6. Have you been retained by the Eastern Paper Bag Company to act as expert for that complainant in this case, or have you ever been retained or employed by the Eastern Paper Bag Company for any purpose?

A. No.

Q. 7. I recognize Mr. Honiss, the entire propriety of your answer to Q. 5; and therefore, I will omit, with regret, to ask you any questions belonging to the second class specified in Q. 5, and will confine my questions to the first class specified in Q. 5. To begin with, I show you a paper bag already marked "Lorenz Exhibit, No. 1"; and I ask you to state, when you first saw any paper bag which was like it, in having inward triangular folds and inward longitudinal folds, and a flat rectangular bottom?

A. Some time during the first part of the year 1883.

Q. 8. Please to give an outline of whatever you did from that time, until you went to Europe in 1887, in respect

of inventing, designing, manufacturing, testing, or running paper bag machines which were adapted to manufacture paper bags substantially like Lorenz Exhibit No. 1?

A. During the first part of the year 1883, while I was in the employ of the Pratt & Whitney Company, a machine for making that general form of bag was brought to the Pratt & Whitney Company, as a sample for the manufacture of other machines by the Company. I was at that time working as a draftsman, and was assigned to the work of making a set of working drawings for use in manufacturing those machines, my work being done under the general supervision of Mr. William A Lorenz, who was then the chief draftsman of the Pratt & Whitney Company. During the progress of this work, Mr. Lorenz and I made various improvements in the machine, and in the product, and some of those improvements were embodied in our first working machine, built by the Pratt & Whitney company, and conpleted in the early part of 1884. About this time, Mr. Lorenz and I left the employ of the Pratt & Whitney Company, and opened another office, in which we worked together until the latter part of 1887, making further improvements in paper bag machines, and paper bags, and in designing a full line of paper bag machines, required for the manufacture of all the commercial sizes of bags. During this time, we superintended the making of the necessary patterns and tools for these machines, and also superintended the construction of the machines themselves. We also planned out the arrangement of two or three paper bag factories, and superintended the installment of the first machines therein

Q. 9. Please to look at a collection of twenty-six paper bag machine patents beginning with No. 222,464, and ending with No. 635,090, and specify the numbers of such of those patents as you have heretofore become well acquainted with?

A. I have heretofore become well acquainted with the patents numbered 222,464; 240,972; 242,661; 327,280; 331,722; 333,647; 337,965; 337,966; 361,951; 387,573; 407,794; 410,841; 410,842; 411,544; 417,346; 534,512; 540,556.

Q. 10. Please to specify which of the patents mentioned in your last answer, if any, conforms to the full line of paper bag machines for the manufacture of all the commercial sizes of bags, which you and Mr. Lorenz produced between the beginning of 1883 and the latter part of 1887; not including, however, the former for the tucked paper tubing which belongs to each of those machines.

A. None of the patents of the series conforms in all respects with all of those machines. The different sizes of machines differed in many details of construction. The patent of the series which most nearly conforms in all respects with the general construction of those machines, is No. 361,951, granted April 26, 1887, to W. A. Lorenz and W. H. Honiss.

Q. 11. You state, in reply to Q. 8, that Mr. Lorenz and yourself superintended the construction of that full line of paper bag machines, and now I ask you to state your own personal experience in the matter of adjusting those machines after they were completed, so that they were fit to be sent to the paper bag factories where they were to be used. And on this subject, you may at first confine your answer to stating generally what you did in respect of such adjustment, upon the first set of machines which Lorenz and you constructed, and also what you did in respect of such adjustment, upon later sets of machines; which information you can give me with sufficient fullness by stating in what factories or places the different sets of machines were made, and stating in general what you did about thus adjusting those different sets; and after you have given me this general information, I will ask more detailed questions?

A. My own personal experience in superintending the construction and adjustment of those machines did not extend to the full line of machines, but was confined to those machines which were to make the sizes of bags from one quarter-pound size to the ten-pound size, both inclusive.

The machines referred to were constructed in two different establishments, the Boston Blower Company at Hyde Park, Massachusetts, and the Pratt & Whitney Company, at Hartford, Connecticut. The work of constructing the parts being completed in accordance with the drawings and specifications, those parts were assembled, and then paper was put through the machines. The machines were then operated by hand and the respective parts were adjusted, so far as adjustment was required, until they produced sufficiently perfect paper bags.

Q. 12. About what was the total number of those machines which were made by the Pratt & Whitney Company, before you went to Europe in the Fall of 1887; and about what was the total number of machines made by the Boston Blower Company, before you went to Europe, at that time?

A. As nearly as I can remember, the Pratt & Whitney Company had at the time of my going to Europe completed about twelve or fifteen machines; and the Boston Blower Company had completed about twenty or twenty-five machines.

Q. 13. Which of these two Companies was the first to complete any of those machines?

A. The Boston Blower Company was the first to complete machines which went into commercial operation.

Q. 14. Who was it, if anybody, that went to Hyde Park, from Hartford, to adjust those first Boston Blower Company machines?

A. I did.

Q. 15. About how much time did you spend in Hyde

Park, Massachusetts, adjusting those twenty or twenty-five Boston Blower Company machines?

A. I did not personally adjust all of those machines. At the outset I selected two of the employees of the Boston Blower Company and instructed them in the work of setting up and adjusting the machines; so that only the first very few machines were adjusted by me personally. I made frequent trips to Hyde Park, and my time while there was so much divided between the inspection of parts during the process of manufacture, and the supervision of new work on the succeeding machines, in addition to the work of adjusting the completed machines, that it is very difficult for me at this time, after the lapse of seventeen or eighteen years, to remember even with a fair degree of approximation, the amount of time occupied in the work of adjusting machines.

Q. 16. Please to call to mind the first of the Boston Blower Company machines which you adjusted, and state as nearly as you can, the length of time you spent in adjusting that machine, after it was assembled, and before it was adjusted well enough to be put into use in a paper bag factory?

A. I cannot now remember how much time was spent in adjusting that one machine, since my time was divided as stated in my previous answer, between that machine and the succeeding machines which were in various stages of progress. Therefore, the work of adjusting which I did, was not done continuously, and I see no way in which I could from memory, add together the different periods on which I was engaged in the work of adjusting, so as to state the aggregate time.

Q. 17. Please to base your answer to Q. 16, upon your judgment of the magnitude of the job of adjusting one of the first of those machines, and state how long, according to your best judgment, that work must have taken, now that you cannot give this information upon the basis of

your memory of the aggregate lengths of the fragments of time used by you in the work?

A. By the work of adjustment, as that term is used by me, in my previous answers, I refer to the work of setting the various parts to their precise positions, after they have been assembled in a more or less approximate position relative to each other; and I do not include in the term "adjustment" the work of an experimental character which was done more particularly upon the first machine, to ascertain what changes from our original designs and drawings were desirable, to improve the operation of the machine, or to lessen the cost of succeeding machines. Thus, using the term "adjustment," I should, according to my judgment, assign a period of about one week for the adjustment of the first machine.

Q. 18. After you had personally adjusted the first machine, and therefore acquired the experience incident thereto, about how long, according to your best judgment, did it take, to adjust a subsequent machine at Hyde Park; defining the word adjustment, in the same way that you have clearly done in answer to Q. 17?

A. Machines of this class are not uniform in their requirements as to adjustment. Errors of construction involving departures from the original design, and errors of design, or errors of judgment, on the part of the designer, or in the making of drawings, frequently occur and have to be corrected, or compensated for by the adjuster, and this work differs very widely in different machines, of different designers, and even in different machines of the same designer. The time required for adjustment, depends so largely upon the individual machines themselves, that no even approximate rule or conclusion can be stated. I think that some of the machines were adjusted in one or two days' time, and on the other hand, if I remember rightly, some of them required several weeks of time, with the delays incident to the re-cutting of cams, and the pin-

1892

ning to their adjusted positions, of the various cams, arms, levers, etc., of the machine.

Q. 19. Please to state an outline of what you did about paper bag machinery in Europe, during the four years you spent there, from 1887 to 1891?

A. I went first to London, and, in January of 1888, I set up a machine for making two-pound bags, which had been shipped there by the Boston Blower Company. I exhibited that machine in operation to various parties, during the succeeding several weeks, and several more machines of different sizes were ordered. Upon their arrival in London, I set up these machines, and began the production of paper bags on a commercial scale. I continued with these machines, having general supervision of them, till about May, 1889, when I went to Paris, and erected two complete machines in the Machinery Hall of the Exposition of that year. I remained in Paris throughout the Exposition, and until about Christmas time of 1889, when I returned to London. The two machines which had been in the Exposition were shipped to London, and upon my return there, I equipped a larger factory with paper bag machines, in the East end of London, removing thereto the other machines which had been previously installed in the first London factory. I continued at that factory, installing additional paper bag machines, printing presses, and other printers' machinery, until the spring of 1891.

Q. 20. State whether the machines which you installed and used in London, were substantially like those which were built by the Boston Blower Company, for use in the United States, before you went to Europe?

A. They were.

Q. 21. How many of those machines were exported from the United States to London, and installed and used in London by you, including the first machine of which you have spoken in that behalf?

A. Sixteen.

Q. 22. Were those machines adjusted by the Boston Blower Company, or by some one else before they left the United States, substantially as other Boston Blower Company machines have been adjusted before leaving the factory of that company, to go to American paper bag factories?

A. Yes, I presume they were, as they had evidently been adjusted before we received them in Europe.

Q. 23. How much, if any, adjusting did you find it necessary to do to those machines when you installed them in London or Paris, as the case may be, before they ran to your satisfaction, in making the self-opening square paper bags which they were adapted to make?

A. Some of them required considerable adjustment, mainly due to the different kinds of paper required for making the paper bags in commercial use in England. There were many of these different kinds of paper, and different adjustments were required for nearly all of the different kinds of paper, particularly those which differed in weight or thickness or flexibility.

Q. 24. During the years in which you superintended those machines in London, how frequently, or otherwise, did those machines require to be stopped and readjusted, after running a while; and in answering this question, please to ignore such readjustments as were occasioned or made necessary by changing the kind of paper used with a particular machine; and confine your answer to such readjustments as were occasioned or made necessary by the machines getting out of adjustment from time to time?

A. I do not recall any instances in which the machines got out of adjustment, except through the breaking of parts; and the only adjustments necessary for the same kind of paper were those required to adapt the machine to changes in the condition of the paper as to dryness.

Q. 25. Suppose one of those machines to have been kept out of use for several months, except so far as its

1304

hand crank was turned from time to time, by different parties unacquainted with the machine, and suppose a roll of paper to have been placed on that machine at the beginning of that idleness, and kept there in a steam-heated room for several months; and on those suppositions, state whether the machine would require to be readjusted at the expiration of that time, in order to make good paper bag blanks and good paper bags from that old roll of paper?

Objected to as hypothetical, and as not calling for testimony as to facts.

A. I have had no experience upon which I could answer this question.

Q. 26. What has been your experience with paper bag machines, like those shown in the Lorenz & Honiss patent, No. 361,951, in respect of the tendency of the longitudinally pasted seam at the forward end of a tucked paper tube to open, under the operation of the blades 132, 133, 136 and 137, of that patent, in opening out the forward end of a tucked paper tube into the form shown in figure 21 of the drawings of that patent, and under the operation of the other instrumentalities of that patent, which still further advance the folding, to the form shown in figure 22 of the drawings of that patent?

A. When the pasted seam is upon the upper side of the blank, as it is in the machine of patent, No. 361,951, so that the pasted seam is folded back, as shown in figure 21; there is a tendency for that seam to open.

Q. 27. How did you counteract that tendency in the machines of the Lorenz & Honiss patent, No. 361,951, and prevent that opening from occurring?

A. We did not always succeed in our efforts to prevent it, especially under some conditions of the atmosphere. The measures we took toward preventing it, were to use very stiff paste, that would dry more quickly while the pasted seam was passing along the former to the folding

mechanism. We also employed a pair of pressing-rolls numbered 54 and 55, in the drawings, and best shown in figs. 17 and 18, of patent No 361,951. These rolls were comparatively narrow on their bearing surfaces, in fact narrower than the width of the line of paste in the seam. We put considerable pressure on these rolls, so as to press the two plys firmly together all along the pasted seam.

Q. 28. What experience did you ever have with a paper bag machine like that shown in the Lorenz & Honiss patent, No. 361,951, in the way of attempting to apply paste or mucilage with a brush or with your fingers to one or both of the opposite borders of the paper while it was being folded into a tucked paper tube, instead of applying paste to the paper for the longitudinal seam by means of an automatic pasting roller or other automatic apparatus?

A. I do not recall that I ever tried to do so.

Q. 29. What does your experience with automatic pasting apparatus for that purpose convince you would be the result of trying to make diamond folded paper bag blanks, for self-opening square paper bags with such a machine as that of the Lorenz & Honiss patent, No. 361,951; from tucked paper tubing which had been made on that machine without any automatic pasting apparatus but with the aid of mucilage or paste applied by a brush or a finger along the borders of the paper while it was being folded by the machine into the form of a tucked paper tube?

Complainant's counsel suggests to Mr. Walker, that this question does not call for testimony from this witness as to any facts or events of which he has personal knowledge, but rather falls within that class of questions calling for the witness' opinion based upon his experience upon a hypothetical case, which class of questions Mr. Walker has stated he would refrain from asking the witness.

Mr. Walker states that he intended to frame Q. 29 so as to bring it within the first class of questions specified in Q. 5; and that he desires the witness to answer the ques-

tion, if he can answer it, upon the basis of events within his own personal knowledge relevant to the history of paper bag machinery; but that if the witness cannot answer it on that basis, he has only to say so, and Mr. Walker will drop the topic.

Complainant's counsel calls attention to Q. 28, the preceding question, and the answer thereto, as an answer to the present question, as now defined by Mr. Walker.

A. From our experience in the pasting of paper tubes, by hand, to be subsequently folded into paper bags, for experimental purposes, I see no reason why mucilage or paste, and especially the latter, could not be applied upon the paper tube while running through the machine of the patent No. 361,951, with satisfactory results as to the subsequent diamond folding operations; if the machine was not operated too rapidly. I believe that we sometimes used to apply paste with a narrow brush, while the machine was being slowly turned by hand, although I do not distinctly recall any particular occasion when we did so.

Q. 30. What experience, if any, did you ever have in the pasting of paper tubes by hand, to be subsequently folded into paper bags for experimental purposes, other than where the paper tubes were allowed to dry thoroughly before they were subsequently used?

A. We had a folding apparatus for the folding of sheets of paper into bellows-sided paper bag blanks, and in using that apparatus, we applied the paste with a brush by hand, Although we usually allowed the paste to dry quite thoroughly, yet I am certain that we frequently folded the bottom folds on these blanks immediately after folding the blanks themselves, within the time that in a machine would elapse between the pasting and the bottom folding operations, certainly in some instances before they were thoroughly dry.

Q. 31. I am not interested in the time when you folded

the bottom folds on these blanks, as compared with the time when you folded the blanks themselves; but I ask you to state whether you remember having used a tucked paper tube that had been pasted by hand, to make a diamond formed blank, while the paste still remained fresh and moist along the longitudinal seam of the tucked paper tube?

Objected to as already answered.

A. I do not remember any specific case as distinct from all other cases; but I know that we folded many hundreds of these bellows-sided blanks from sheets of paper, and subsequently made the diamond folds on those blanks. And in many of these cases, the diamond folds must have been made while the longitudinal seams of the tucked paper tubes remained fresh and moist.

Q. 32. Do you remember what particular diamond folding mechanism you used in the cases last mentioned by you?

A. In many cases, we made the diamond folds by hand, and in other cases, we employed a hand apparatus in which the triangular folds in the side edges of the diamond, were formed by triangular blades having pivoted thereon a piece of wire bent into a triangular contour, the members immediately involved in the folding operation being very much like those shown in letters patent No. 327,280, and best shown in figs. 10a, and 10b. of that patent.

Q. 33. State the fact in respect of the presence or absence from that hand apparatus of the presser, m, shown in figure 12, of that patent, as holding the forward end of the longitudinally pasted seam down upon the table, i, below it?

A. I do not recall that any such presser was appurtenant to the apparatus; but we applied various devices by hand during our experiments with that hand apparatus, leading to the development of the respective machines of letters patent, No. 331,722, and No. 361,951.

1308

Q. 34. I am not interested in any experiments you may have made with hand pasted and still moist tucked paper tubes where the forward end of the pasted seam was rigidly held together during the making of the diamond fold, as shown in figure 12, of patent No. 327,280, for example, or as shown in figure 8 of patent No. 337,966, for another example; because it is self-evident that where the forward end of a freshly pasted tucked paper tube is thus rigidly held together by a positive gripper, the longitudinal seam of that tube would not be pulled apart by the diamond folding apparatus. But what I desire to know, is whether you ever had any experience in opening out one end of a tucked paper tube, which had been freshly pasted or mucilaged by hand, and folding that opened end down into a diamond form, in an apparatus which contained no mechanical means for holding the forward end of the longitudinally pasted seam together?

A. Concerning the first part of the question, I do not understand that the forward end of the pasted seam is rigidly held together by the apparatus as shown in figure 12 of patent, No. 327,280. However that may be, in answering the latter portion of your question, I would say that it was our practice in all cases, while conducting our experiments, to approximate all the conditions of the experiments as closely as possible to the ultimate working requirements and conditions of the machines we were designing, and since the paper tubes must in actual commercial manufacture be diamond-folded while the longitudinal tube seams are still moist and fresh, I am sure that we conducted our experiments, or some of them, with that hand apparatus while the longitudinal tube seams were still fresh. And we did so, in some cases, without providing any mechanical means for holding the forward end of the longitudinally pasted seam together.

Q. 35. What has your experience been in respect of the necessity of supplying the paper bag machines which you used in London, with paste of particular character and

consistency as compared with using "any old paste" that anybody happened to have handy?

A. We found it desirable to employ good paste, and to use it as thick as possible, in point of consistency.

Q. 36. Did you or did Mr. Lorenz, to your knowledge, or did both of you together, ever plan a scheme to dry the paste of the longitudinal seams of your tucked paper tubes, by means of introducing heat into the former around which those tucked paper tubes were made?

A. Yes, we planned such a scheme together.

Q. 37. To what extent did you use that scheme?

A. We applied it to an experimental machine we had in our office, and made some experimental tests of it.

Q. 38. With what result?

A. We found that it had the effect of drying the pasted seam to a slight extent, greater than it would have dried without it, during the same time; but the objections to its use, due to the employment of steam heat, which made the entire former very hot, seemed to us to outweigh its advantages. Hence we did not adopt it for our commercial machines.

Q. 39. What does your experience with mucilage, if any, prove in respect of its availability as an adhesive substance to employ in making continuous tucked paper tubing on a square bottom paper bag machine former; if you have had any experience with mucilage when applied either by automatic mechanism or by a hand brush or otherwise?

A. I do not recall that we ever employed mucilage in a machine applied by automatic mechanism. We have used it with a brush experimentally, but found that it has a decided tendency to cause the paper to pucker as it dries. I consider it far inferior to paste for use in making paper bag tubing.

DIRECT EXAMINATION CLOSED.

No cross examination.

Deposition closed.

WM. H. HONISS.

UNITED STATES CIRCUIT COURT,

DISTRICT OF MAINE.

EASTERN PAPER BAG COMPANY,

vs.

CONTINENTAL PAPER BAG COMPANY.

Evidence taken on behalf of defendant, at the office of Albert H. Walker, floor 25, Park Row Building, Manhattan, New York, beginning on Friday, January 16th, 1903, at 11 o'clock in the forenoon; the said evidence being taken before William E. McReynolds, a notary public, having authority to act as such in Manhattan, New York; and being taken down by Annie Fischer, a typewriter operator, and being thus taken before William E. McReynolds by Annie Fischer, in pursuance of the stipulation of the parties which is prefixed to the complainant's evidence, and which was made March 6, 1902.

Present—WILLIAM E. MCREYNOLDS, a notary public; and L. F. H. BETTS, counsel for the complainant, and ALBERT H. WALKER, counsel for the defendant.

BENJAMIN M. DESJARDINS, a witness produced on behalf of the defendant, being duly sworn, testifies as follows, the direct questions being put by Mr. Walker:

Q. 1. Please state your name; residence; occupation; and where and when you were born?

A. Benjamin M. DesJardins; residence, West Hartford, Connecticut; occupation, a mechanical engineer and inventor; I was born in 1858, in Michigan.

Q. 2. What business, if any, do you conduct, in Hartford?

A. I have conducted a mechanical engineering office in Hartford, ever since 1894.

Q. 3. State what relations, if any, you have had, in a business way, with Edward E. Claussen, another mechanical engineer, in Hartford, Connecticut?

A. He worked for me in August, 1894, and worked five hours a day almost all of the year 1895. He moved his own office into my office in October, 1895, and he continued in my office until some time in 1896, when he established an office of his own in the same building, which is the Ballerstein Building, Hartford, Connecticut.

Q. 4. Please to look at "Claussen Exhibit No. 3," which is a colored drawing, and particularly at the words "Witnesses Benj. M. Des Jardins, Jan. 17, 1896," and state whose handwriting these particular words are in?

A. They are in my handwriting; except the word "Witnesses."

Q. 5. When did you write those words, including the date Jan. 17, 1896, and your name?

A. On January 17, 1896.

Q. 6. State the circumstances under which you thus witnessed the drawing "Claussen Exhibit No. 3"?

A. In the early part of November, 1895, Mr. Claussen asked me to see if I could make a number of folds in a square bottomed paper bag. I was absorbed in other matters, and did not do it for him. In the early part of November he made a paper bag in my presence; and explained what he called the new method of folding, which he had just conceived. First he had a paper bag tube, and went through the various folds by hand showing me how it could be made, and showed me sketches which he had drawn, showing in a general way how the mechanism could be constructed. The paper tube was creased on each edge,

having an inward fold. I do not remember any explanation as to how he would make this fold; but he explained particularly how to open the end of the tube by holding the upper fold in one position, and then he asked me to catch hold of the lower fold and pull it down, and then with his fingers turned the upper part of the bag in such a way as to produce a three-cornered figure. The result of this was imperfect, because we could not hold, as he explained, the paper at all necessary points. One of the sketches which he showed me, illustrated how the upper part of the bag, when separated from the lower part, was to be turned over a plate having angular edges. The part which clamped the lower edge of the bag was to raise and engage the bag, when in an elevated position, and then, after clamping the edges, swing downwards. I remember these operations because it was practically the first time I examined a method for folding the bottom of a paper bag. Mr. Claussen worked more or less on this and other paper bag folds, during the month of November and December. I cannot recollect just to what extent he confined himself to paper bag machinery while he was working on his own time. In the early part of January, 1896, I remember his making this sketch, which he asked me to sign as a witness on January 17, 1896. I remember this sketch very distinctly, having compared it at that time with the description on the same sheet, and also compared it with another sketch he showed me, referred to in the description, dated November 6, 1895.

Q. 7. Please to look at the pencil sketch I now show you, which has been marked by the Notary, Charles E. Smith, as "Claussen Exhibit No. 5," and state whatever you know about the origin of that sketch?

A. I remember examining quite carefully the figure in the lower left hand corner, and also the one in the centre of the sheet. At present I have no distinct recollection of the other two, near the middle of each end of the sheet.

Q. 8. I observe that this pencil sketch has on it the words, "Sketch made Nov. 6–95, Ed. E. C.," and I ask you to state what connection, if any, this pencil sketch has with the statement which is in the descriptive matter written on the face of "Claussen Exhibit No. 3," and which statement reads as follows: "The sketch of this machine is dated Nov. 6–95."

Objected to as calling for a conclusion by the witness.

A. From my recollection of the general appearance of the sketch, I believe it to be the same.

Q. 9. Now please to state, according to your best recollection, when it was that you first saw the pencil sketch which is now marked "Claussen Exhibit No. 5," and particularly the figure in the lower left hand corner, and also the larger figure which occupies the middle of the sheet of brown paper upon which that sketch appears?

A. The sketch which I saw was shown me early in November, 1895, and about the time when he explained the process of making the folds. That sketch was made on the day that the fold was shown me.

Q. 10. To what extent, if at all, are you able to identify this pencil sketch "Claussen Exhibit No. 5" as being the same sketch that Mr. Claussen showed you early in November, 1895; or as being a sketch showing the same devices in its lower left hand corner and in its middle part, that were shown on the pencil sketch which Mr. Claussen showed you early in November, 1895?

A. The impression left by the mechanism which he disclosed, and the mechanism which he explained in connection with the disclosure, and the general appearance of this sketch are what I distinctly remember. I remember the angular fingers which turn the paper over; also the plate turning the paper tube down from near the upper set of fingers and its general operation, as well as the swinging device which stretches the lower fold and separates

the end of the tube. I do not remember any specific marking on that sketch, except that it contained the date and Mr. Claussen's signature.

Q. 11. Now please to look again at "Claussen Exhibit No. 3," which you witnessed January 17, 1896, and state whether you understood the machinery shown and described in that exhibit, when you witnessed it, on the one hand, or whether, on the other hand, you simply signed your name as a witness, without understanding the machinery shown and described on the exhibit which you were witnessing?

A. I understood all the general motions necessary to produce the operation. I did not examine the connections, for operating these motions, to the cams and other operating devices.

Q. 12. How did your understanding of the machinery of "Claussen Exhibit No. 3" agree or disagree, as the case may be on January 17, 1896, with your understanding of the machinery which he had explained to you to some extent, I believe, by a pencil sketch, early in November, 1895?

Objected to as leading.

A. The main motions were substantially the same. In regard to the sketch, I did not go into any of the details of the motions; but when asked to witness the drawing I examined carefully all the necessary motions to such an extent that I felt certain that it was a fairly easy matter to make the necessary connections before completing an automatic machine.

Q. 13. Suppose that Mr. Claussen had died on January 18th, 1896, and state whether you would have been able, or not able, as the case may be, to direct the mechanics and machinists how to make an automatic paper bag machine on the plan of "Claussen Exhibit, No. 3," and in accordance with the explanations of that exhibit which

Mr. Claussen made to you on January 17, 1896, or previous to that day; and, in answering this question, please to understand that the supposed directions to mechanics and machinists might include furnishing them with working drawings made by you or under your direction, in accordance with "Claussen Exhibit, No. 3," as well as including showing that exhibit to those mechanics and machinists?

Objected to as leading and hypothetic.

A. With a further examination of the art, so as to determine how to make the tube, I could, either with or without a set of working drawings, have directed mechanics to make an automatic paper bag machine, on the plan of "Claussen Exhibit, No. 3"; that is, using the same devices which are shown in "Claussen Exhibit, No. 3" with such minor modifications which would appear upon perfecting the mechanism.

Q. 14. Suppose Mr. Claussen had died on November 7, 1895; and state whether you would have been able or not able, as the case may be, to direct mechanics and machinists how to make an automatic paper bag machine on the plan of the pencil sketch, which he showed you early in November, 1895?

Objected to as leading and hypothetical. The question is further objected to on the ground that it assumes that the witness has identified all of the figures on said sheet, while as a matter of fact, the witness has only identified the figure in the lower left hand corner, and the one in the center of the sheet.

Question withdrawn.

Q. 15. Suppose Mr. Claussen had died on November 7, 1895; and state whether you would have been able, or not been able, as the case might be, to thereupon direct mechanics and machinists how to make an automatic paper bag machine on the plan shown in the large middle figure and in the figure in the lower left hand corner of "Claussen Exhibit, No. 5."

Objected to as speculative and leading.

A. I could have completed the machine by supplying myself the natural details, if necessary, for the minor operations not shown.

Q. 16. How long have you been working as a mechanical engineer?

A. I commenced first in 1882 as an inventor, and acquired the knowledge of the business gradually through a continuous experience, largely on my own machines.

Q. 17. What kind of machines have you been engaged in producing or planning since you began in 1882?

A. Principally type setting, distributing and adjusting machines. During the year 1895, I did considerable work on envelope machinery for the Plimpton Manufacturing Company, of Hartford, comprising automatic banders, a device for printing addresses, stopping mechanism and other improvements.

Q. 18. When, if ever, did you have any experience with paper bag machinery, or plans for paper bag machinery, before Mr. Claussen came into your office, in the fall of 1895?

A. I have no experience or knowledge whatever, except what I obtained from these two sketches and explanations from Mr. Claussen at that time.

Q. 19. For certainty on the record, please to specify what things you refer to in your last answer, when you use the words "these two sketches"?

A. I refer to Claussen Exhibit No. 3 and Claussen Exhibit No. 5.

Cross examination by Mr. Betts:

X-Q. 20. During the time that Mr. Claussen was in your office, from October, 1895, until some time in 1896, was Mr. Claussen in the habit of making sketches, such as "Claussen Exhibit No. 5"?

A. He was.

X-Q. 21. Do you remember the month in 1896, when Mr. Claussen left your office and established an office of his own in the same building?

A. I do not at this moment.

X-Q. 22. Was it before or after you witnessed "Claussen Exhibit No. 3"?

A. It was several months after.

X-Q. 23. During this period, that is, between October, 1895, and some time in 1896, when Mr. Claussen had an office with you, about how many pencil sketches did Mr. Claussen make, of the kind that "Claussen Exhibit No. 5" is a specimen?

A. Mr. Claussen made quite a number. It was his habit, when he thought of anything, to make a sketch of it. I do not remember whether he was in the habit of preserving all his sketches.

X-Q. 24. About how many sketches of this kind do you suppose Mr. Claussen made during this period?

A. I did not see all of the sketches he made as he worked in a separate room; but I should say that they averaged several a day, usually in defining details of his work.

X-Q. 25. Was Mr. Claussen in the habit, or did he usually show you all of the pencil sketches which he made, while he had an office with you, and explain to you the mechanical devices shown in the sketches?

A. I examined usually the sketches on my own work, which he made when he was not satisfied with the result of the mechanism. This was for the purpose of helping him out. I usually avoided examining other people's sketches of their own work, because I was too absorbed in my own work. In this case, however, he had asked me to help him devise folds for the bottoms of paper bags, and I told him I could not undertake it; but through the conversation I decided to give this a little thought, for the

purpose of getting an idea of how paper bags are made. Mr. Claussen was always very frank with me, and I would have been perfectly free at any time to examine what he was working on.

X-Q. 26. Then it was not Mr. Claussen's habit to show you sketches which he had made at this time of his own work?

A. He asked me to examine such sketches on a number of occasions, and I always refused, for the reason that when I examined a new mechanism it was liable to cling to my mind, and force out other work which I had on hand.

X-Q. 27. Then Mr. Claussen, showing you this pencil sketch, "Claussen Exhibit No. 5," was in the nature of an exception to Mr. Claussen's habit and your habit of not examining such sketches of other people's work, is that correct?

A. It was because I had told him that some time I wanted him to explain to me a little about paper bag machinery; it was, therefore, an exceptional case.

X-Q. 28. Mr. Claussen has testified in this case as follows:

"X-Q. 347. When first did you show Claussen Exhibit No. 5 to anyone?

A. I don't think I ever showed it to anybody till I sent it to Mr. Walker in June, 1902."

Is it not probable, Mr. Des Jardins, that the sketch which you recollect Mr. Claussen's showing you "early in November, 1895," at about the time that he explained the process of making folds in paper bag blanks, was some other sketch rather than Claussen Exhibit No. 5?

Mr. Walker objects to this question, because it asks the witness to draw some conclusion of alleged probability, from the fact that Mr. Claussen did not remember when he gave his deposition in this case, having shown

Claussen Exhibit, No. 5, to Mr. Des Jardins in 1895. This witness has been produced to testify to facts remembered by him, and not to speculate touching the significance of Mr. Claussen's failure to recollect.

Complainant's counsel objects to the form of objection put upon the record by Mr. Walker as leading. Complainant's counsel also objects to the form of the objection, in that it states that Mr. Claussen testified that he did not "remember"; while the exact testimony on this subject by Mr. Claussen, is in the question.

A. I do not say definitely that it was the same sketch, as I do not remember it by any special marking. But I do remember the two groups of mechanisms contained in the sketch, Claussen Exhibit, No. 5, as the same, in general substance, as contained in the sketch which he showed me, both early in November, and at the time at which I examined Claussen Exhibit, No. 3.

X-Q. 29. Then you cannot positively identify Claussen Exhibit, No. 5, as the identical and particular sketch which Mr. Claussen showed you early in November, 1895, when he was explaining to you his new process of folding a paper bag blank? Is that correct?

A. Not any more than I have a very strong impression that the general location of the figures which took my attention are the same. And also I am quite sure that when I held the sketch at that time, I held the right hand side downwards. I cannot positively identify that it was the same identical paper, which is now marked Claussen Exhibit, No. 5; but I am very positive that the sketch which I did examine contained the same mechanisms as shown in the two figures which I have already mentioned, namely, the one in the lower left-hand corner, and the large figure in the center of Claussen Exhibit, No. 5.

X-Q. 30. One of the two figures of mechanisms illus-

trated on Claussen Exhibit, No. 5, which you recall, comprises the single mechanism illustrated in the extreme lower and left-hand corner of that exhibit. The mechanism just to the right of this figure and to which the words "end view" and "section y" are applied, are not included in this figure which you identify? Is that correct?

A. I have no recollection of going into the details of the mechanism, any more than what was plainly in sight in the lower left-hand corner figure. I have no recollection of the figures in Claussen Exhibit, No. 5, to which the words "end view" and "section y" are applied in that exhibit. Those two figures were probably there, but I did not refer to them in understanding the mechanism for turning the corners over.

X-Q. 31. What mechanism in Claussen Exhibit, No. 5, do you mean to include when you say that you remember "the large figure in the center"?

A. The mechanism for holding the upper side of the paper tube, and for grasping the lower side, and spreading the end; also the plate which made the crease across the end of the tube a few inches from the bottom. Those are the mechanisms which caused me to understand the method of folding the bag.

X-Q. 32. Claussen Exhibit, No. 6, purports to be a tracing of Claussen Exhibit, No. 5, to which exhibit, No. 6, letters and numerals have been applied to identify various parts. In order to ascertain exactly what parts of Claussen Exhibit, No. 5, you mean to include by saying that you identify the "large figure in the center" will you please look at Claussen Exhibit, No. 6, and then state, by reference to the letters and numerals on that drawing, what parts you include?

A. I include the shaft D, to which is attached the swinging plate X, or P, the lower clamping device 6a, pivoted at 19 (and another feature to that which doesn't

appear here but which he explained verbally), the cam 8; the cylinder 6 must have been there, but I do not remember, because it is not what I would naturally think of as an operating mechanism. I also remember the plate y, and the creaser and paster. I have no specific recollection of the part marked with an arrow, but I remember something about cutting the paper off. I also remember the general scheme of holding the paper on a tension between four rollers.

X-Q. 33. Is that all the parts which you can identify as belonging to the "large figure in the center" of Claussen Exhibit, No. 5?

A. These are all the mechanisms which I distinctly remember.

X-Q. 34. Do you know, or did Mr. Claussen explain to you, what the dotted line just below the numeral 6a, in Claussen Exhibit, No. 6, was intended to delineate?

A. I do not remember that line.

X-Q. 35. Do you remember, or did Mr. Claussen explain to you, what the part marked 6a, in Claussen Exhibit, No. 6, was intended to delineate?

A. My recollection is that was the part which grasped the lower fold of the tube, and produced an opening.

X-Q. 36. How did the part marked 6a, in Claussen Exhibit, No. 6, grasp the lower fold of the tube, and produce an opening in the end of the tube?

A. I simply remember that when 6a was in an upward position, the lower fold of the tube in some way ran, as it were, between two fingers, or rather two sets of fingers, one on each side of the tube. These fingers then closed down on to the paper. Then the part marked 6a was allowed, by its cam, to move downwards.

X-Q. 37. When have you last seen a machine open the end of a tube blank, and produce a fold in the bag blank?

A. I have never seen a completed paper bag machine to examine it carefully; but simply glanced at one for not over a minute or so, during the present week, and in doing so, did not examine or undertake to follow the operation of the mechanisms.

X-Q. 38. Was that machine that you examined during the present week, a machine in Mr. Walker's model-room in his office?

A. Yes, sir.

X-Q. 39. And when did you examine this machine?

A. Wednesday morning of this week, about half-past ten.

X-Q. 40. Did Mr. Walker show you this machine?

A. Mr. Walker turned the machine, and I got a general idea of the passing of the paper bag through it.

X-Q. 41. Did Mr. Walker show you this machine, or operate this machine in your presence, in connection with his showing you Claussen Exhibit, No. 5, and Claussen Exhibit, No. 3?

A. I don't remember whether it was before or after; but it was the same day.

X-Q. 42. At the time Mr. Walker operated this machine for you, did he point out to you any particular parts on that machine?

A. Not sufficiently so that I could remember it in any way. I simply looked at the general idea of the paper bag machine, as it was the first I had ever seen.

X-Q. 43. Did not Mr. Walker point out to you, at this time, a plate in this machine corresponding to the plate X, in Claussen Exhibit, No. 6?

A. I do not remember whether he pointed out any particular part.

X-Q. 44. Did Mr. Walker point out to you, or did

anybody else point out to you, any part of that machine corresponding to the part marked 6a, in Claussen Exhibit, No. 6?

A. I do not remember that Mr. Walker pointed out the part 6a; but I noticed it as corresponding to the picture of the machine I got in my mind from my previous talk with Mr. Claussen. I asked Mr. Walker if it would be all right for him to explain the machine to me, and he told me that I had better not have any explanation, and so he gave me no explanation.

X-Q. 45. Now, referring to Claussen Exhibit, No. 5, do you identify all of the parts delineated in the figure at the lower left-hand corner of that sheet?

A. I remember simply the beveled plate and the fingers on each side of it, and the fact that they rotated and turned the paper over it.

X-Q. 46. Please refer to Claussen Exhibit, No. 6, which is a tracing of Claussen Exhibit, No. 5, and state how those parts are marked in Claussen Exhibit, No. 6?

A. The beveled plate is marked y, and the fingers which I recollect and which turn the paper over it are marked b. I also remember the plate X, or P, with the shaft or bearing D. These are the only parts I remember in the figure in the lower left-hand corner of Claussen Exhibit, No. 5.

X-Q. 47. To what were the fingers b, attached, in Claussen Exhibit, No. 5?

A. I have no particular remembrance of the support for these. That is a detail which mentally I paid no attention to.

X-Q. 48. If you were to build a machine for folding paper bag blanks, on the plan shown in the large middle figure, and in the figure in the lower left-hand corner of Claussen Exhibit, No. 5, to what would you attach the fingers b?

A. I have not gone into the mechanisms sufficiently to

state definitely ; but my impression is, to something rigid with the frame.

X-Q. 49. Referring to Claussen Exhibit, No. 6, which is a tracing of Claussen Exhibit, No. 5, what is the shaft D, a bearing for ?

A. The shaft D, is a bearing for the plate P, or X, said plate rotating downward, to form the opening in the tube.

X-Q. 50. If you were to build a machine after the plan of Claussen Exhibit, No. 5, against what part of that machine would have the fingers *b*, operate ?

A. As far as I understood the machine at that time, I would have had the fingers b, turn over and against the plate y.

X-Q. 51. What is the plate y for in Claussen Exhibit, No. 5 ?

A. The plate y, as I understood it, was for forming, or turning over, the upper corners of the tube.

X-Q. 52. How did the plate y, operate to do this, in Claussen Exhibit, No. 5 ?

A. I suppose the plate y was stationary, and the corners were simply turned over.

X-Q. 53. Is that the way that you would build a machine on the plan of Claussen Exhibit, No. 5 ?

A. I could not tell until I made a careful examination of the requirements.

X-Q. 54. Please now make a careful examination of the Claussen Exhibit, No. 5, and then state whether that is the way you would build a machine, following the plan of that exhibit ?

A. I am very strongly of the impression that I would have the plate stationary ; but I cannot tell definitely without going into all the surrounding mechanisms necessary to complete the paper bag.

X-Q. 55. If you built a machine after Claussen Exhibit, No. 5, with the plate y stationary, how would you arrange the supports of that plate ?

A. I would fasten it to some stationary part of the machine.

X-Q. 56. To what stationary part of the machine would you fasten the plate y?

A. That could not be determined without first knowing the complete mechanism necessary, and where the interferences might be.

X-Q. 57. If you were to build a machine after the plan of Claussen Exhibit, No. 5, how would you support the plate X or P?

A. I would support it on a shaft (whatever part of the shaft interfering with the plate y, off-set or removed) and the shaft supported on the frame of the machine, or some rigid part connected to the frame; unless I found when the machine was under way, that the construction interfered with something else.

X-Q. 58. Will you please now describe fully how the parts marked 6, 6a, 8, 20, 19, P or X, D, in Claussen Exhibit, No. 6, would co-operatively act in the machine which you say you could build after the plan of Claussen Exhibit, No. 5?

A. I could not say in regard to what details might be encountered in working up the machine; but in a general way, the paper tube having an inward fold on each edge would pass under the plate P, or X, and over the fingers, connected either in conjunction with the plate P, or X, or with the stationary plate y, and also over the part 6a, when it is in its upward position, that is, high enough to engage the lower fold, by means of a set of fingers to pass over this fold. Then the fingers connected with the upper part of the mechanism would hold the upper part of the tube somewhere close to the plate y, and while so held, the part 6a, would move downward, and at or about the same time the plate P, or X, would swing downward until the end of the tul was opened funnel-shaped. In opening

the tube funnel-shaped, as far as I understood the mechanism, that is, as far as I went into the details, the lower end of the tube is caught, I was under the impression, by a second clip; that part I do not remember distinctly. In this form the opening became a sort of a triangle. About this time, the upper corners of the tube are folded over on the plate y, the creaser then engaging over the lower part of the triangle would have a tendency to turn the lower point of the triangle upward slightly, and the paster would apply the paste on the exposed parts. This, in a general way, would complete the bottom of the paper bag, with the exception of turning the lower point of the triangle along the creased line over the parts turned on the plate y, by the fingers b. The other motion would simply be either passing the bag between two rollers or turning a plate over the final flap.

X-Q. 59. In your last answer, you spoke of "the fingers connected with the upper part of the mechanism, which hold the upper part of the tube somewhere, close to the plate y." If you were building a machine after the plan of Claussen Exhibit, No. 5, to what part of that machine would you connect these fingers?

A. I could not tell definitely without practically constructing those parts in drawings, or more complete sketches.

Adjourned until Saturday, January 17, 1903, at 11 o'clock A. M.

Saturday, January 17, 1903, 11 o'clock A. M. Met pursuant to adjournment; counsel present as before.

X-Q. 60. In your answer to X-Q. 58, you say that the paper tube having an inward fold on each edge would pass under the plate P or X, "and over the fingers connected

either in conjunction with the plate P or X, or with the stationary plate y." If you were to build a machine after the plan of Claussen Exhibit, No. 5, to what part of that machine would you connect the fingers which you have mentioned?

A. They could be connected either to a stationary part or to a movable part, without materially affecting the result. The local arrangement of parts would determine which might be best.

X-Q. 61. But what part of that machine would you now connect these fingers to, if you were to build a machine after the plan of Claussen Exhibit, No. 5?

A. I could not answer that question definitely, without a further development of the machine as shown in Claussen Exhibit, No. 5. By development, I mean a further perfecting of the parts shown, and the addition of such other parts, necessary to make the machine complete.

X-Q. 62. If you were to build a machine after the plan of Claussen Exhibit, No. 5, would you connect these fingers to the plate P, or to the plate y?

A. As far as I understand the requirements of the machine at present, I would be inclined to first try them on the plate y.

X-Q. 63. Why would you first try them on the plate y? Are you not sure that the plate y, is the part to which you would connect these fingers from the showing in Claussen Exhibit, No. 5?

A. Because first they act in conjunction with the plate y, and second, there seems no reason why the plate y, should not project far enough to form a suitable bearing for them. I could not be sure without a further understanding of the machine, after having more fully perfected it.

X-Q. 64. From the showing in Claussen Exhibit, No. 5, would you connect any fingers to the plate P, or X, if you were to build a machine after the plan of that sketch?

A. Fingers on the plate P, or X, might be useful in supporting the paper; and again the paper might be held in its proper position without fingers on the plate P, or X.

X-Q. 65. Then you are uncertain as to whether or not from the showing in Claussen Exhibit, No. 5, whether you would connect any finger to the plate P, or X, if you were called upon to make a machine after the plan of that sketch?

A. I would probably connect fingers on plate P, or X; at the beginning, and a further progress of the machine would determine whether they were really necessary or not.

X-Q. 66. Will you now please explain what you understand to be the function of the plate P, or X, in Claussen Exhibit, No. 5, and what function that plate would perform if you were called upon to manufacture a machine from the showing made in Claussen Exhibit, No. 5?

A. The plate P, or X, forms a fold in the end of the tube, this fold in the tube having a tendency to turn the plane of the bottom of the bag parallel with its side, and also is connected with opening the end of the tube for the purpose of forming the bottom.

X-Q. 67. I do not understand what you mean by saying "this fold in the tube having a tendency to turn the plane of the bottom of the bag parallel with its side." Will you please explain this a little more fully?

A. During a part of the operation, the bag and the partially completed bottom are practically on the same plane. This is a feature of this process, and may or may not be necessary.

X-Q. 68. Do you mean that the plate P might be an unnecessary part?

A. I could not say whether the proper folds in the bag could be made without it, or some substitute.

X-Q. 69. In a machine which you say you could build

from the showing in Claussen Exhibit, No. 5, would the plate P, or X in that machine, make only one fold or more than one fold?

Mr. Walker asks complainant's counsel whether he is willing for the witness to explain the folds made in a bag tube by the machine of Claussen Exhibit, No. 5, with the aid of a bag tube before him, so that he will be able to show complainant's counsel exactly where and how the plate P, or X, would operate in working on such a bag tube. Mr. Walker makes this request because he believes there is no man living in the world at present, who can explain those folds in words without the assistance of any drawing, showing the progressive folding of the paper, and without the assistance of a paper tube, to show how the folds progress, when that paper tube is opened out and operated upon by machinery.

Complainant's counsel replies that the witness has testified in his direct examination that he could have directed mechanics and machinists to make an automatic paper bag machine on the plan shown in Claussen Exhibit, No. 5. This sketch is before the witness and the present question is specifically devoted to the supposed machine of this sketch, and a tube blank is unnecessary, in view of the witness' testimony.

Mr. Walker states that the fallacy of this whole cross examination resides in assuming that the witness said in his direct examination that he could, by means of words alone, have directed mechanics and machinists to make an automatic paper bag machine on the plan shown in Claussen Exhibit, No. 5; whereas, the witness made no such absurd statement as that. And Mr. Walker adds that it must be obvious to counsel for the complainant, that whenever the witness would undertake to direct mechanics and machinists how to make an automatic paper bag machine on the plan of Claussen Exhibit, No. 5, he would employ in giving

those directions a paper bag tube, and would show those mechanics and machinists, by means of that paper bag tube, the succession of folds to be made therein by the machine to be produced; and Mr. Walker objects to further cross examination of this witness as to how he would direct machinists and mechanics in constructing a paper bag machine according to Claussen Exhibit, No. 5, unless the witness is permitted to employ in giving that information such means as he would naturally employ in thus directing machinists and mechanics.

Complainant's counsel calls the attention of the court to the fact that the highly suggestive and interesting remarks of Mr. Walker, were made by him in the presence and hearing of the witness.

A. The plate P, or X, takes, as it were, a tuck in the upper side of the tube, leaving the lower end and the upper end extending practically in the same direction.

X-Q. 70. What is the direction which this tuck made by the plate P, or X, with respect to the side of the tube blank. Is it parallel to the sides; is it at right angles to the side, or is it an angle to the side?

Mr. Walker objects to this question as ambiguous, because the tube blank has four sides, and the question does not state which of these sides is referred to therein; and Mr. Walker objects to further attempts to confuse this matter by complicated and ambiguous questions, many of which would not be understood alike, by any two of the most expert paper bag machine men in the world. And Mr. Walker calls the attention of the court to the fact that this cross-examination has already continued nearly a day, through more than fifty cross-questions, to only three of which defendant's counsel has objected, though most of them were highly objectionable, according to the rules of evidence. And Mr. Walker objects to all further questions put to this witness relevant to the machine of Claussen Exhibit, No. 5, unless the witness is given a fair chance

to understand what complainant's counsel is driving at, and is also given a fair chance to explain by means of a paper bag blank, how the machine of Claussen Exhibit, No. 5, would operate.

Complainant's counsel, as a sufficient answer to Mr. Walker's objection, notes that the witness did not have a paper bag blank before him during his direct examination, when he testified concerning the machine of Claussen Exhibit, No. 5.

A. If the question means the limit of the motion of the plate P, or X, then I would determine the best angle for accomplishing the purpose by experiment, and could not say at this time from the disclosures in the sketch.

X-Q. 71. How long would it take you to build a machine or give directions to build a machine from Claussen Exhibit, No. 5?

A. That I could not say definitely, owing to the large amount of details that would have to be supplied; but as a fair estimate I should say about six months; but it might take longer.

X-Q. 72. In the sketch marked "Claussen Exhibit, No. 5," if the plate P or X, is rotated upon its axis, would it not collide with the circumference or periphery of the cylinder 6, assuming that the shaft D, remains stationary?

A. The cylinder 6, would not necessarily need to exist at the same time and place of the lower position of plate P, or X. I understood, in my examination of the sketch, that it was probably out of its path entirely. In fact, I took no notice of cylinder 6, whatever, in my original examination.

X-Q. 73. Please look at Claussen Exhibit, No. 3, and state whether it is not a fact that the plate P, in that drawing, will collide with the cylinder 6, assuming that the axis of the plate P, is stationary?

A. That is a detail which I did not enter into, as it is a very minor point in machine construction of any kind.

X-Q 74. But it is a fact, is it not, that in both of these exhibits the plate P, is shown as in a position to collide with the cylinder, assuming that the shaft of the plate P, is stationary?

A. Not necessarily so, because in Claussen Exhibit, No. 3, the clamp 20, might pull the paper bag along and the crease preserved. This would have to be determined by a closer working out of the details.

X-Q. 75. I think you misunderstood my last question, and I will therefore repeat it.

Is it not a fact that in both of the Claussen Exhibits, Nos. 3 and 5, the plate P, is shown in those sketches as in a position to collide with the cylinder, assuming that the shaft of the plate P, is stationary?

Mr. Walker objects to this question, because it does not state conditions enough upon which any person, however perfectly acquainted with Claussen Exhibit, No. 3, and Claussen Exhibit, No. 5, can construe the question.

A. I do not necessarily understand it so, because the plate P in figure 6, of Claussen Exhibit, No. 3, does not in any way collide with the cylinder 6, and it is not absolutely necessary for it to go nearer the cylinder than is shown in figure 6, unless experiment should determine such a necessity.

X-Q. 76. Do you mean that the plate P, in figure 6, of Claussen Exhibit, No. 3, might rotate from a position to the left of that shown in figure 6, to the position which it occupies in figure 6, as its furthest position, and then rotate back again to the left as we look at the drawing?

A. I would try the two extreme positions first, and determine whether or not that was sufficient to accomplish the purpose required, and then vary from that according to the result of the experiment.

X-Q. 77. Do you understand that the plate P, is in one of its extreme positions as shown in figure 6, of Claussen Exhibit, No. 3?

A. As far as I understand the mechanism, it might be; but from my own judgment of the conditions, I would prefer to have it rotate farther.

X-Q. 78. If the plate P, in Claussen Exhibit No. 3, rotates farther, assuming that the shaft of the plate P is stationary, it cannot do so without colliding with the cylinder 6, can it?

A. Not necessarily. The cylinder 6 might be cut away; or, on the other hand, the lower edge of the plate P, in Claussen Exhibit No. 3, might be made to raise towards its shaft. These are possible conditions which occur to me at first examination of the feature involved in the question. This is a minor detail which I seldom consider in the general examination of a machine.

X-Q. 79. Will you please describe how you would cause the lower edge of the plate P, in Claussen Exhibit No. 3, to be raised towards its shaft?

The question is objected to, because the witness has not said that he would cause the lower edge of the plate P, to be raised towards its shaft; but only that that would be a second of two ways mentioned in the answer, by means of which a collision between the plate P, and the cylinder 6, might be averted.

A. This might be done in quite a large number of ways, well known in mechanics. For example, the plate might telescope; a skeleton might be used instead of the plate with a lower bar movable; the plate might be constructed in the form of a hinge with the extreme ends swinging together, any of which would accomplish the purpose.

X-Q. 80. The proper function which the plate P is called upon to perform, being once understood by a skilled mechanic; such mechanic could easily so arrange the plate P, by any of the expedients which you have mentioned, or by the expedient of cutting away the cylinder, which you have also suggested, in order that the plate P, could per-

form its proper function, and that is what you meant to say, is it not?

Mr. Walker objects to this question, as another example of multiplication of words without wisdom; the question embodying statements quite out of conformity with what the witness has plainly said; and Mr. Walker suggests to the Court that the proper function of cross-examination is to ascertain, by fair methods, precisely what the witness knows relevant to the issues of the suit, and that it is not proper cross-examination to exert the ingenuity of counsel to the utmost, in the direction of introducing confusion into a deposition.

A. I could not tell which one of these would be used, if any of them were found necessary, without a closer examination of the details of the requirements. But from present impressions, I think either of those properly operated would, in a way, do the work.

Cross-examination closed.

Deposition closed.

BENJ. M. DESJARDINS.

The complainant's counsel desires to note that the answer to Q. 10, as given by the witness, and as taken down upon the typewriter at the time it was given by the witness, read as follows:

"The impression left by the mechanism which he disclosed, and the mechanism which he explained, in connection with the disclosure, and the general appearance of this sketch, are what I distinctly remember. I remember the angular bars which turn the paper over; also the plate turning the upper set of fingers and its general operation, as well as the swinging device which stretches the lower fold and separates the end of the tube. I do not remember any specific marking on that sketch, except that it contained the date and Mr. Claussen's signature."

Complainant's counsel further notes that this answer stood as thus given and written, until the deposition was closed, and until an entry had been made upon the record that the deposition was closed.

Complainant's counsel also notes that the answer to Q. 52, as originally given by the witness, and as taken down upon the typewriter, read as follows:

"I suppose the plate y, was stationary, and the corners were simply turned over."

Complainant's counsel notes that this answer thus stood upon the record, until the deposition was closed, and until it was noted on the record that the deposition was closed.

Complainant's counsel further notes that the witness was thereupon requested to read over his deposition, and that in the absence of complainant's counsel, the answers Qs. 10 and 52, were changed to read as follows:

"Q. 10. The impression left by the mechanism which he disclosed, and the mechanism which he explained in connection with the disclosure, and the general appearance of this sketch are what I distinctly remember. I remember the angular fingers which turn the paper over; also the plate turning the paper tube down from near the upper set of fingers, and its general operation, as well as the swinging device which stretches the lower fold and separates the end of the tube. I do not remember any specific marking on that sketch, except that it contained the date and Mr. Claussen's signature."

And the answer to Q. 52 was changed to read as follows:

"I suppose the plate y, was stationary, and the corners were simply turned over it."

In view of the foregoing, complainant's counsel desires to enter an objection to these changes as being improper.

Mr. Walker states to the Court that the changes specified in the statement of plaintiff's counsel, were made by the witness in his own handwriting, without any sugges-

tion from any one, and when he was alone in a room carefully reading his deposition, preparatory to signing it, and that having read his deposition, he did sign it, with those changes plainly interlined therein; and that Mr. Walker did not know anything about those changes until after the deposition had been signed, and the witness had been excused and had gone away.

Mr. Walker also states to the Court that, in his judgment, the changes in question are plainly called for by the context of the words inserted by the witness, and are necessary to state the meaning which the context shows he must have intended to express originally. And Mr. Walker submits to the Court that no witness ought to be asked to sign a deposition without being permitted to spontaneously correct it in his own handwriting so as to make it conform to the truth; and that this deposition having been thus carefully corrected by the witness, and signed by him, is free from objection on account of the said changes which were made by the witness in two of his answers. But if the Court thinks otherwise, Mr. Walker has no objection to the answers to Q. 10 and Q. 52 being changed back again by the Court into the form specified by complainant's counsel.

UNITED STATES CIRCUIT COURT,

DISTRICT OF MAINE.

EASTERN PAPER BAG COMPANY

vs.

CONTINENTAL PAPER BAG COMPANY.

Evidence taken on behalf of the defendant, at the office of Albert H. Walker, floor 25, Park Row Building, Manhattan, New York, beginning on Monday, February 2, 1903, at 3 o'clock P. M.; the said evidence being taken before William E. McReynolds, a Notary Public having authority to act as such in Manhattan, New York; and being taken down by Grace Smith, a typewriter operator, and being thus taken before William E. McReynolds, by Grace Smith in pursuance of a stipulation of the parties, which is prefixed to the complainant's evidence, and which was made March 6, 1902.

Present—William E. McReynolds, the Notary Public; and L. F. H. Betts, counsel for the complainant, and Albert H. Walker, counsel for the defendant.

LUCIUS G. FISCHER, a witness produced by subpœna, issued at the request of the defendant, being duly sworn, testifies as follows on behalf of the defendant, the direct questions being put by Mr. Walker:

Q. 1. Please state your name; your residence; and your age?

A. Lucius G. Fischer; Chicago; age, 59.

Q. 2. What connection, if any, do you have with the Union Bag & Paper Company?

A. I am its President.

Q. 3. In what State was that Company organized as a corporation?

A. New Jersey.

Q. 4. If that Company is engaged in the business of manufacturing paper bags, please to state where its paper bag factory, or paper bag factories, is located, or are located?

A. Kaukauna, Wisconsin; Sandy Hill and Ballston Spa, New York; and Watertown, Massachusetts.

Q. 5. About how many paper bag machines of all kinds is the Union Bag & Paper Company running at present?

Mr. Betts objects to the question, on the ground that since the defendant's record shows that the Continental Paper Bag Company is a competitor of the Union Bag & Paper Company, in the manufacture of paper bags, the witness should not be compelled to disclose, to a competitor, the extent of its business, since Mr. Walker is counsel for the Continental Paper Bag Company. The question is therefore objected to on the ground that it is the privilege of the witness not to disclose this matter, and the witness is advised that he may, if it deems it expedient, decline to answer this question until the court has passed upon the propriety thereof.

A. I decline to answer, by advice of counsel.

Q. 6. Please to look at a paper bag I now show you, which has already been put in evidence, and marked "Lorenz Exhibit, No. 3," and state whether you recognize it as being a specimen of one kind of paper bags which is being made by the Union Bag & Paper Company?

A. I think it is.

Q. 7. Please to look at a paper bag I now show you, which is marked "Claussen Exhibit, No. 7," and state whether you recognize it as being a specimen of paper

bags which are being made by the Continental Paper Bag Company, and sold in competition with the bags of the Union Bag & Paper Company, of which Lorenz Exhibit, No. 3, is a specimen?

Objected to as incompetent. Defendant's counsel should call an officer of the defendant company to prove this matter.

A. I am not an expert. I could not answer that question.

Q. 8. What is your information and belief upon the question whether the Continental Paper Bag Company is making, in Rumford Falls, Maine, and selling, substantially, such paper bags as Lorenz Exhibit, No. 3, in competition with the Union Bag & Paper Company?

Objected to as indefinite, in not defining what is meant by "substantially."

Question withdrawn.

Q. 9. What is your information and belief upon the question whether the Continental Paper Bag Company, is making in Rumford Falls, Maine, and is selling in competition with the Union Bag & Paper Company, paper bags like Lorenz Exhibit, No. 3, in having inwardly turned longitudinal folds, and inwardly turned triangular folds, and flat rectangular bottoms?

Objected to as incompetent, the witness having just testified that he is not an expert. Defendant's counsel should call one of the officers or employees of the defendant company to prove this.

Mr. Walker states to the court, that this question is not intended to prove the *fact* of the manufacture of such paper bags by the Continental Paper Bag Company, but only to prove the information and belief of *this witness* upon that question; and that the information and belief of this witness upon that question is material to this suit, independent of whether that information and belief is true or not.

A. I am informed they are.

Q. 10. What is your information and belief in respect to the present and prospective magnitude of that competition with the Union Bag & Paper Company?

Objected to as incompetent, irrelevant and immaterial.

A. I cannot tell anything in regard to the prospective magnitude of that competition. Their present competition in this line is damaging; because even with a small amount of goods, of this character, placed on the market, as against ours, it leads to doubt in the minds of buyers, and has an effect on prices.

Q. 11. Please to state what is the amount of the capital stock of the Union Bag & Paper Company?

Objected to as immaterial.

A. Twenty-seven million dollars.

Q. 12. Does the Union Bag & Paper Company own any of the stock of the Eastern Paper Bag Company, which is the complainant in this case?

A. It does.

Q. 13. What is the amount of the stock of the Eastern Paper Bag Company, and how much of that stock is owned by the Union Bag & Paper Company?

A. I do not know the exact amount of the stock of the Eastern Paper Bag Company; but I do know that the Union Bag & Paper Company owns all that stock, except a very small number of shares.

Q. 14. Are you one of the directors of the Eastern Paper Bag Company, or an officer of that corporation?

A. I think not.

Q. 15. How long has the Union Bag & Paper Company owned a majority of the stock of the Eastern Paper Bag Company?

A. I should think about three years.

Q. 16. Who is the President of the Eastern Paper Bag Company?

A. Charles S. Coburn, of Boston, Massachusetts.

Q. 17. How long has he been President of that company, as far as you know?

A. Well, I think about three years.

Q. 18. Do you know Mr. Albert Haverstick, of Philadelphia?

A. Yes, sir.

Q. 19. What connection, if any, has he had with the Eastern Paper Bag Company, as far as you know?

A. I think he was a director and stockholder about three years ago.

Q. 20. Does the Eastern Paper Bag Company maintain any separate executive organization, or is its actual business done by the Union Bag & Paper Company; this question being intended to refer to such business as the receiving and paying out of money?

A. Its organization is separate. Its bills are paid partly by its own officers, and partly by the Union Bag & Paper Company.

Q. 20. It is true, is it not, that the Eastern Paper Bag Company is practically one of the branches of the Union Bag & Paper Company; for convenience of the latter corporation?

Objected to as a conclusion of Mr. Walker.

A. Well, what do you mean by "branches"?

Q. 21. I have understood that the Union Bag & Paper Company, instead of doing all its business in its own name, has done its manufacturing business in its own name, but has maintained subordinate corporate organizations, including the Eastern Paper Bag Company, and the Union Paper Bag Machine Company, with a view to having the legal title to some or all of the patents, equitably owned by the Union Bag & Paper Company, held in the names of those subordinate corporations; and in using the word "branches" I meant to indicate such a relation as that, between the Eastern Paper Bag Company, and the Union Bag & Paper Company.

A. The Union Paper Bag Machine Company originally owned all the patents under which their seven licensees were working. These licensees were bought out by the Union Paper Bag Company, and patents purchased since the formation of this present Union Bag & Paper Company, were assigned to the Union Paper Bag Machine Company, by which company the Union Bag & Paper Company is licensed. At the time this suit was brought against the Continental Paper Bag Company, the Union Bag & Paper Company did not own or control all of the stock of the Eastern Paper Bag Company, thereby necessitating the suit being brought in the name of the Eastern Paper Bag Company, which Company owned the patent in suit. Had the Union Bag & Paper Company, at the time this suit was brought, owned all the stock of the Eastern Paper Bag Company, the suit would have been brought in the name of the Union Bag & Paper Company.

Q. 22. It appears in the record, that this suit was brought October 11, 1901, and I inquire of you whether at that time, the Union Bag & Paper Company owned the majority of the stock of the Eastern Paper Bag Company?

A. It did.

Q. 23. Has the Eastern Paper Bag Company, since that time, conveyed its patents, including the Liddell patent, upon which this suit is brought, to the Union Bag & Paper Company, or to the Union Paper Bag Machine Company?

Objected to as immaterial.

A. I cannot tell you that. I do not know.

Q. 24. It is true, is it not, as you understand, that the Union Bag & Paper Company is practically the complainant in this case; and that the Eastern Paper Bag Company was made the nominal complainant, because though when the suit was brought, the Union Bag & Paper Company owned a majority of the stock of the Eastern Paper Company, it did not own all of that stock; and at that time the

legal title to the Liddell patent, upon which the suit was based, was held by the Eastern Paper Bag Company, for the benefit of all its stockholders?

the benefit of all its stockholders?

Objected to as calling for a conclusion by Mr. Walker as to the testimony of the witness.

A. Yes.

Q. 25. Are you acquainted with William A. Lorenz, William H. Honiss, Edward E. Claussen and George Mortson, all of Hartford, Connecticut?

A. Yes.

Q. 26. Are those gentlemen all employed or retained at present by the Union Bag & Paper Company, as experts and mechanical engineers in paper bag machinery?

A. I think they are. I am sure about the first three; but I don't remember whether Mortson's term of employment has expired or not.

Q. 27. Please to state whether, according to your information, the daily number of paper bags substantially like Lorenz Exhibit, No. 3, in having inwardly turned longitudinal folds, and inwardly turned triangular folds, now being manufactured by the Union Bag & Paper Company, is over ten millions?

Mr. Betts objects to this question as improper, and submits to the court that this question inquires into the business secrets of the Union Bag & Paper Company, and submits to the court that the witness should be privileged to decline to answer this question, on the ground that Mr. Walker, who propounds the same, is counsel, in this case, for the defendant, Continental Paper Bag Company, which Company, the record shows, is a competitor of the Union Bag & Paper Company. In view, therefore, the witness is advised that it is his privilege to decline to answer the question, until the court has had an opportunity to pass upon the propriety of the question.

Mr. Walker asks Mr. Betts to state how it can injure the Union Bag & Paper Company to have it become known

to the Continental Paper Company, that the business of the Union Bag & Paper Company, in making paper bags like Lorenz Exhibit, No. 3, is more than four times as great as the business of the Continental Paper Bag Company in making similar bags.

Mr. Betts replies that whether it would do harm or good to the Union Bag & Paper Company, to inform the Continental Paper Bag Company concerning this matter, is not for him to pass upon; but it is a part of the counsel for the Union Bag & Paper Company to advise the witness as to his rights concerning this question.

A. I decline to answer, under advice of counsel.

Q. 28. Has the Eastern Paper Bag Company, or the Union Bag Company, as far as you know, ever made and used any paper bag machine which purported to be made in conformity to the Liddell patent, No. 558,969, upon which this suit is based?

Objected to as immaterial.

A. I will be unable to answer, as I am not an expert.

Q. 29. Is Charles B. Stilwell one of the experts and mechanical engineers of the Union Bag & Paper Company?

A. He is.

Q. 30. Which one of the mechanical engineers and experts of the Union Bag & Paper Company, is most fully informed about the different kinds of machines which are used by that Company, in manufacturing such bags as Lorenz Exhibit No. 3?

A. Probably Charles B. Stilwell.

Q. 31. It is true, is it not, that about four years ago, the Union Bag & Paper Company acquired the ownership of the Lorenz & Honiss paper bag machines, with other property of the Consolidated S. O. S. Bag Company, which had been running those machines in Brooklyn, New York, and in Plantsville, Connecticut, prior to that acquirement?

A. Yes.

Q. 32. Is Daniel Appel, of Cleveland, Ohio, one of the mechanical engineers, inventors or experts of the Union Bag & Paper Company?

A. He is retained by the Company.

Q. 33. Do you know F. H. Kelliher of Cleveland, Ohio, and if you do, please state whether he is retained or employed by the Union Bag & Paper Company?

A. I don't know him personally. I don't think he is employed by the company.

Q. 34. Is William H. Patterson, of Cleveland, Ohio, retained or employed by the Union Bag & Paper Company?

A. No.

Q. 35. Has the Union Bag & Paper Company acquired the ownership of the paper bag machines which were formerly run by the Western Paper Bag Company, in Batavia, Illinois, making paper bags, similar to Lorenz Exhibit, No. 3?

A. Yes, they own the Western paper bag machines, and are running them in Kaukauna, Wisconsin. The Union Bag & Paper Company acquired the machines of the Western Paper Bag Company, about four years ago.

Q. 36. Do you person know William Liddell, of Brooklyn, New York?

A. I have been introduced to him.

Q. 37. When, if ever, did you have any conversation with him, about this suit, or about the Liddell patent, No. 558,969, upon which this suit is based?

A. Never, so far as I remember.

Cross examination by Mr. Betts:

X-Q. 38. What is your information and belief upon the question as to who owns the controlling interest in the Continental Paper Bag Company?

Objected to as not cross-examination.

A. I have the information, from authority that I think

is perfectly trustworthy, that the controlling interest is owned by the International Paper Company.

Deposition closed.

LUCIUS G. FISHER.

UNITED STATES CIRCUIT COURT,

DISTRICT OF MAINE.

EASTERN PAPER BAG COMPANY

vs.

CONTINENTAL PAPER BAG COMPANY.

Evidence taken on behalf of the defendant, at the office of Albert H. Walker, Floor 25, Park Row Building, Manhattan, New York, beginning Tuesday, February 17, 1903, at 11 o'clock in the forenoon, and continuing thereafter; the said evidence being taken before William E. McReynolds, a Notary Public, having authority to act as such in Manhattan, New York; and being taken down by Grace Smith, a typewriter operator; and being thus taken before William E. McReynolds, by Grace Smith, in pursuance of a stipulation of the parties, which is prefixed to the complainant's evidence, and which was made March 6, 1902.

Present: William E. McReynolds, the Notary Public; and Mr. S. R. Betts, counsel for the complainant; and Albert H. Walker, counsel for the defendant.

HERMAN ELSAS, a witness produced on behalf of the defendant, being duly sworn, by the Notary Public, deposes as follows, the direct questions being put by Mr. Walker:

Q. 1. Please state your name; your residence; and

state what connection, if any, you have with the Continental Paper Bag Company?

A. My name is Herman Elsas; I live at 2 West 88th St., Borough of Manhattan; and I am President of the Continental Paper Bag Company, Rumford Falls, Maine.

Q. 2. In what State was the Continental Paper Bag Company organized, as a corporation? And under the laws of what state was it thus organized?

Objected to, as the records are the best evidence.

A. It was organized under the laws of the State of Maine and organized in the State of Maine.

Q. 3. When was it organized?

Same objection.

A. Organized in 1899.

Q. 4. What business was the Continental Paper Bag Company mainly organized to conduct? or what business was mainly intended to be conducted by that Company?

A. The company was organized mainly for the purpose of manufacturing paper bags, or what is known to the tradeas the self-opening square bags.

Q. 5. What business, if any, in addition to manufacturing self-opening square paper bags, has the Continenta Paper Bag Company been conducting, since its organization?

A. Manufacturing and dealing in paper bags of various descrptions, and also selling paper.

Q. 6. What relations, if any, have ever existed between the Continental Paper Bag Company and the Elsas Pape Company?

A. Soon after the organization of the Continental Paper Bag Company, it purchased the capital stock of the Elsas Pape Company, and its entire business and good will.

Q. 7. What business had the Elsas Paper Company been conducting, before the organization of the Continental Paper Company?

A. The Elsas Paper Company manufactured square bags, satchel bottom bags, and dealt in paper.

Q. 8. Did the Elsas Paper Company ever manufacture any self-opening square paper bags?

A. It did not.

Q. 9. When the Continental Paper Bag Company undertook to engage in the business of manufacturing self-opening square paper bags; how did it undertake to obtain machines for that purpose?

A. The Continental Paper Bag Company was in position to obtain such machines, or patents for such machines; because I offered to sell to the said Company, certain patents which would enable the Company to construct machines to perform the manufacturing of such paper bags.

Q. 10. Please to look at letters patent of the United States, No. 598,497, granted February 8, 1898, in pursuance of application No. 600,861, filed July 29, 1896, by Edward E. Claussen of Hartford, Connecticut; and state whether that patent is one of the patents referred to in your last answer?

A. It is.

Q. 11. At what time, and in what way, did you acquire the ownership of that Claussen patent, No. 598,497, of February 8, 1898?

A. During the early part of 1898, I negotiated with Mr. Claussen for the purchase of all of his patents, including this one, and accordingly made a contract with him, and subsequent contracts, which set forth the sale of the said patents to me.

Q. 12. When the Continental Paper Bag Company was organized, did you transfer this Claussen patent, No. 598,497, to that Company?

Objected to; as the records are the best evidence.

A. I did.

Q. 13. About how many paper bag machines, if any,

have heretofore been constructed by or for the Continental Paper Bag Company, in accordance with the general plan of this Claussen patent, No. 598,497?

A. Fifty-nine.

Q. 14. About how many of those fifty-nine machines have heretofore been used by the Continental Paper Bag Company, in its factory at Rumford Falls, Maine, in the manufacture of self opening square paper bags?

A. All of them have been used.

Q. 15. About how many self-opening square paper bag machines, in general conformity to the plan of the Claussen patent, No. 598,497, has the Continental Paper Bag Company made contracts for building, in addition to the fifty-nine machines specified in your answer to Q. 13?

A. The company has contracted for 102 more machines of that kind.

Q. 16. Before the Continental Paper Bag Company, or you embarked in the business of making and using self-opening square paper bag machines, on the general plan of the Claussen patent, No. 598,497; what evidence, if any, did Mr. Claussen furnish to you, to show that those machines could be made and used, without infringing any prior patent?

A. Mr. Claussen submitted to me a complete search in regard to the patents which had been issued on paper bag machinery; and said search was made by Mr. Albert H. Walker, Patent Attorney, at that time resident of Hartford, Connecticut.

Q. 17. I show you a document, which has been offered in evidence by the complainant in this case, and which is marked "Complainant's Exhibit, Walker Opinion"; and which is dated Hartford, Connecticut, December 24, 1896; and I call your attention particularly to that part of that document, which begins with the line reading "Serial No. 600,861" and which part ends with the following paragraph:

"For these reasons, I conclude that this Claussen machine does not infringe Claim 4, of the Lorenz & Honiss patent, No. 337,966; and it surely does not infringe any other claim of that patent. Having found that that machine does not infringe any claim of any existing patent; I can think of no reason to fear that any manufacture, sale or use, of such machines would ever be interfered with, when being conducted under the patent which will undoubtedly soon be granted upon this Claussen application, Serial No. 600,861."

And I ask you to state whether you recognize the document I show you, and particularly the part thereof, which I specify in this question, as being the "complete search" which had been made by Mr. Walker, and which was submitted to you by Mr. Claussen, as evidence that machines built on the general plan of the Claussen patent, No. 598,497, would not infringe any prior patent?

A. I do recognize it as such.

Q. 18. What influence, if any, did the Walker opinion of December 24, 1896, have toward inducing you to organize the Continental Paper Bag Company, and afterward toward inducing you, as President of that Company, to undertake the business of making paper bag machines in general conformity to the plan of the Claussen patent, No. 598,497, and in using such machines in the manufacture of paper bags?

Objected to as immaterial.

A. With my knowledge that Mr. Albert H. Walker was considered a patent attorney of eminence regarding paper bag machinery (with an experience of twenty years or more, which he had with paper bag machinery), I fully concluded that it would be prudent for the Continental Paper Bag Company to undertake the construction of such machinery, for the purpose of manufacturing self-opening square paper bags.

Q. 19. Are you a patent lawyer or a lawyer of any kind,

or a patent expert, or otherwise qualified in your own judgment, to personally compare the plan for a paper bag machine which is shown in the Claussen patent, No. 598,497, with 205 prior paper bag machine patents, and thereupon decide for yourself, whether such Claussen paper bag machine would infringe any of those prior 205 paper bag machine patents?

A. I am not a patent attorney, nor a mechanical engineer, nor an expert in regard to paper bag machinery, or any other machinery; and I am therefore unable to decide regarding the values of the different patents, or the validity of them, or any question of infringement connected therewith.

Q. 20. When, if ever, first, was any claim made by anybody, and presented to the Continental Paper Bag Company, to the effect that the self-opening square paper bag machines which that Company had made, and was using, in accordance with the general plan of the Claussen patent, No. 598,497, were infringements of some prior patent?

A. The first notice the company received, was a letter from the law firm of Betts, Betts, Sheffield & Betts, written some date in October, 1901.

Q. 21. What patent was brought to your attention in October, 1901, by Betts, Betts, Sheffield & Betts, as being a patent which was infringed by the Claussen paper bag machines of the Continental Paper Bag Company?

A. Our attention was called to the patent issued to W. Liddell, No. 558,969, of April 28, 1896.

Q. 22. What did the Continental Paper Bag Company, or did you, on behalf of the Continental Paper Bag Company, thereupon do in respect of consulting counsel, on the question whether your Claussen paper bag machines did really infringe the Liddell patent, No. 558,969?

A. As President of the Continental Paper Bag Company, I consulted Mr. Albert H. Walker in regard to the communication received from Betts, Betts, Sheffield & Betts.

Q. 23. What opinion or advice, if any, did Mr. Walker thereupon give to you as President of the Continental Paper Bag Company, upon the question whether your Claussen self-opening square, paper bag machines, did really infringe the Liddell patent, No. 558,969?

A. Mr. Walker informed me that the Claussen machines did not infringe the letters patent No. 558,969, of April 28, 1896, to William Liddell.

Q. 24. After this suit was brought against the Continental Paper Bag Company, in October, 1901; to what attorney was the defence of the suit committed, by the defendant?

A. To Mr. Albert H. Walker.

Q. 25. During the sixteen months which have now passed since this suit was brought, has the defence of the suit been managed entirely by Mr. Walker, or have you or has some other officer, or agent of the Continental Paper Bag Company, undertaken to direct Mr. Walker what to do, or what not to do, in the management of the defence?

A. The entire management of the defence was given to Mr. Albert H. Walker, by myself; and no other agent or officer has given Mr. Albert H. Walker any instructions in regard to the carrying on of the defence of this suit.

Q. 26. About how much money was invested by the Continental Paper Bag Company, in the enterprise of building, and installing self-opening square paper bag machines on the general plan of the Claussen patent, No. 598,497; prior to the time when, in October, 1901, Betts, Betts, Sheffield & Betts wrote their letter to the Continental Paper Bag Company, claiming that those Claussen paper bag machines were infringements of the Liddell patent, No. 558,969?

Objected to as immaterial.

A. One hundred and twenty-three thousand, eight hundred and ninety-two dollars, and sixty-five cents.

Q. 27. About how much money has been invested by the Continental Paper Bag Company, in the enterprise of building and installing self-opening square paper bag machines on the general plan of the Claussen patent, No. 598,497; since the time when, in October 1901, Betts, Betts, Sheffield & Betts wrote their letter to the Continental Paper Bag Company, claiming that those Claussen paper bag machines were infringements of the Liddell patent, No. 558,969.

Objected to as immaterial.

A. The amount is one hundred and one thousand four hundred and thirty-nine dollars and nineteen cents.

Q. 28. About how much money has been contracted by the Continental Paper Bag Company, to be paid out hereafter, for building self-opening square paper bag machines, on the general plan of the Claussen patent, No. 598,497?

Same objection.

A. The amount is one hundred and thirty-six thousand, eight hundred and six dollars.

Q. 29. Please to state what was the average waste made during the most recent available space of one month, or thereabouts, of all of the self-opening square paper bag machines of the Continental Paper Bag Company, running in its factory in Rumford Falls, Maine?

Same objection.

A. The percentage of waste for the period of January 12, till February 10, inclusive, was six, and twenty-seven one hundredths per cent.

Q. 30. What was the average waste made during that period of January 12, to February 10, 1903, inclusive, by that one of those machines which made the least average waste during that time?

Same objection.

A. Three and one-half per cent.

Q. 31. Please to specify the causes of the waste of six and twenty-seven one hundredths per cent., made by those self-opening square paper bag machines from January 12, to February 10, inclusive, 1903.

Same objection.

A. The principal causes which enter into the making of waste, in running paper through a paper bag machine, are: first, the unevenness in the thickness of the paper; second, the irregularity of the quality of the paper; and third, the winding of the paper on a core or roll, which causes the beginning of the roll of paper to curl considerably, when that part of the paper roll is unwound and fed into the paper bag machine.

Q. 32. About what is the diameter of the core or roll, around which continuous strips of paper are wound, so as to constitute a roll of paper to be unwound by a paper bag machine, when drawing that paper continuously into itself, for the manufacture by it, of self-opening square paper bags?

A. About two inches in diameter.

Q. 33. At what point, in the process of producing such a roll of paper, is the continuous strip wound around such a two-inch roll?

A. At the end of the paper making machine, where the bag roll is rewound from the parent roll.

Q. 34. Why does the fact that the first turns of paper, around the two-inch core of the paper roll, must be bent in sharp curves around that roll, operate to interfere with the operation of the folding fingers of a paper bag machine, and thus result in the production of some waste?

A. The extraordinary curling of the paper, which is due to the continuous paper strip being wound around a very small diameter, makes it difficult for the folding finger mechanism of any bag machine, to handle paper in such a state, without considerable waste.

Q. 35. Why does unevenness in the thickness of a continuous strip of paper, operate to produce some waste, when that continuous strip of paper is drawn into itself, by a paper bag machine, and manufactured into self-opening square paper bags, at high speeds?

A. Because the entire mechanism of the paper bag machine is adjusted to take in a given thickness of paper, when the said machine is started up, for the said thickness; and when such thickness varies, the mechanism is not absolutely effective.

Q. 36. What irregularity of the quality of a strip of paper, other than unevenness in its thickness, has occurred in the paper which has been used by the Claussen self-opening square paper bag machines of the Continental Paper Bag Company, and which irregularity of quality is specified in your answer to Q. 31, as being one cause of those machines making some waste?

A. The diamond folding mechanism of the Claussen machine is apt to cause waste, whenever the quality of the paper runs irregular.

Q. 37. Did you ever see any of the Lorenz & Honiss machines, or any of the Stillwell machines, or any of the Murchie machines which, according to the testimony of Mr. Lorenz, have been, and are being used by the Union Bag & Paper Company, in the manufacture of such paper bags as Lorenz Exhibit, No. 2, or Lorenz Exhibit, No. 3?

Objected to as immaterial.

A. I have never seen in operation, a Lorenz & Honiss machine making the bags, as per Lorenz Exhibit, No. 2. I have passed through a room in which Stillwell machines were in operation, making the bags, as per Lorenz Exhibit, No. 3, and I probably stopped, perhaps five seconds in front of one machine. I never saw a Murchie machine, in operation or out of operation

Q. 38. Who has the general management of the distribution and sale of the self-opening square paper bags which

are being manufactured, and have been manufactured, by the Continental Paper Bag Company, in its Rumford Falls factory, upon the fifty-nine Claussen machines running there?

A. I am general manager of the Continental Paper Bag Company, and attend to all of its business; manufacturing and selling.

Q. 39. About how many of those bags is that Company manufacturing at present, each day?

A. About two millions.

Q. 40. Please to state the name or names, as the case may be, of the competitor or competitors, with the Continental Paper Bag Company, in the manufacture and sale, of those self-opening square paper bags, in the United States?

Objected to as immaterial.

A. The corporation known as the Union Bag & Paper Company, is the Company manufacturing such bags. And a company known as the South Bend Paper Company, the proprietor of which signs himself as Herbert B. Westervelt, has put some self-opening square bags on the market recently.

Q. 41. According to your best information, derived from being engaged in managing the sale of about two million of those self-opening square paper bags a day, about how many such bags per day are put on the market and sold by the Union Bag & Paper Company?

Objected to as calling for hearsay and guesswork; and also as immaterial.

A. From my experience in the sales department of our business; I should judge the Union Bag & Paper Company markets every day approximately between 10 and 12 millions self-opening square paper bags.

Q. 42. Does Mr. Westervelt or his Company, put on the market, many or only a few such self-opening square paper bags, as you are informed?

Objected to as immaterial, and calling for hearsay.

A. From what Mr. Westervelt tells me himself, he manufactures about three hundred thousand such bags per day.

Adjourned until Wednesday, February 18, 1903, at 11 o'clock A. M.

Wednesday, February 18, 1903, 11 o'clock A. M. Met pursuant to adjournment; counsel present as before.

Q. 43. Please to state what letters, if any, are used by the Continental Paper Bag Company, as its particular designation of the self-opening square paper bags made by that Company; and also what letters, if any, are used by the Union Bag & Paper Company, to designate the self-opening square paper bags made by that Company; and also what letters, if any, are used by the South Bend Paper Company, to designate the self-opening square paper bags made by Mr. Westervelt?

A. The Continental Paper Bag Company uses the letters A. B. C. The Union Bag & Paper Company has in use several names by which they designate the shaped bag in question; namely, S. O. S.; S. F. S.; Automatic; Improved. The South Bend Company uses the letters E. Z., to designate their particular make of bags.

Q. 44. Please to give a list of the present officers and directors of the Continental Paper Bag Company.

A. President, Herman Elsas; Vice-president, Warren Curtis, of New York City; Treasurer, B. W. Hyde, of New York City; Secretary, I. Kuhe, of New York City; Clerk, David W. Snow, of Portland, Maine. The directors are: Herman Elsas, of New York City; Waldo Pettingill of Rumford Falls, Maine; Warren Curtis, of New York City; F. H. Parks, of New York City; Alonzo N. Burbank, of New York City.

Q. 45. What person, or corporation, is the largest stockholder in the Continental Paper Bag Company?

A. The International Paper Company is the largest stockholder in the Continental Paper Bag Company.

Q. 46. Who is president of the International Paper Company?

A. Mr. Hugh J. Chisholm.

Q. 47. Are Mr. Pettingill, Mr. Curtis, Mr. Parks and Mr. Burbank large stockholders or small stockholders in the Continental Paper Bag Company?

A. They are large stockholders in the Continental Paper Bag Company.

Q. 48. Is Mr. Hugh J. Chisholm a large stockholder or any stockholder in the Continental Paper Bag Company?

A. He is a large stockholder in the Continental Paper Bag Company.

Cross examination by Mr. S. R. Betts:

X-Q. 49. When was the Elsas Paper Company organized and where, and is it still in existence?

A. The Elsas Paper Bag Company was organized first under the laws of New Jersey, and, if I remember correctly, in the year 1895; and afterwards in the year 1897 or 1898 the New Jersey charter was dissolved, and the company was organized under the laws of the State of New York. Prior to the year 1895 there was an Elsas Paper Company in existence, but the said company was organized under the laws of the State of Pennsylvania, with the factory located at West Newton, Pennsylvania. The New York Elsas Paper Company was dissolved in 1899 (the latter part of it) or the beginning of 1900, and the said corporation is now out of existence.

X-Q. 50. By whom were these Elsas Paper Companies which you speak of in your last answer organized?

A. The Elsas Paper Company of New Jersey was organized by myself as controlling stockholder, and there were additional stockholders and directors, the number of which was sufficient to come up to the requirements of the law. The New York corporation was organized by myself as

controlling stockholder, with a sufficient number of stockholders and directors to make the company a legal corporation. I don't remember at the present time who the organizers were of the Pennyslvania corporation, but I was one of them.

X-Q. 51. Who organized the Continental Paper Bag Company?

A. I don't remember the names of the parties who organized it

X-Q. 52. What did you have to do with the organization of that company, in any way?

A. I was instrumental in securing the subscriptions for the capital stock of the company, with the assistance of Mr. Hugh J. Chisholm, Waldo Pettingill, and others. I don't remember the names of all of them.

X-Q. 53 Is it not a fact that the controlling interest in organizing the Continental Paper Bag Company, was the International Paper Company, either directly or through individuals interested in the International Paper Com-Company?

A. It is a fact.

X-Q. 54. Is it not a fact that upon the organization of the Continental Paper Bag Company, and ever since, the International Paper Company has had a controlling interest in the Continental Paper Bag Company?

A. It is a fact.

X-Q. 55. Is not such interest a *largely* controlling interest?

A. It is not.

X-Q. 56. Is not the interest of the International Paper Company in connection with the interests of those who are stockholders in the International Paper Company, and also in the Continental Paper Bag Company, a *largely* controlling interest in the Continental Paper Bag Company?

A. I don't know.

X-Q. 57. Are you yourself, a stockholder in the International Paper Company?

A. No, sir.

X-Q. 58. As a matter of fact, was not the Continental Paper Bag Company organized substantially for the purpose of giving the International Paper Company an outlet or use for part of its paper product, turning such product into manufactured paper bags?

A. I don't know.

X-Q. 59. Have you no knowledge or information on that subject, derived from your connection with the organization of the Continental Paper Bag Company, or otherwise.

Objected to as calling for hearsay information, relevant to what motives may have influenced the International Paper Company in taking a majority of the stock of the Continental Paper Bag Company; and defendant's counsel suggests that the inquiry ought to be confined to what motive influenced Mr. Elsas to do his part of organizing the Continental Paper Bag Company.

A. The only information which I have derived is the information received through usual business transactions, in contracting for supply of paper by the International Paper Company to the Continental Paper Bag Company.

X-Q. 60. Well, what is that information so derived?

A. The Continental Paper Bag Company entered into a contract with the International Paper Company, for the supply of its bag paper and other papers, consumed in the manufacturing of its product.

X-Q. 61. Has the Continental Paper Bag Company ever purchased any paper to be manufactured into paper bags, from any other source except the International Paper Company?

A. It has purchased paper from other sources.

X-Q. 62. From what sources?

A. From a number of paper mills located in different

parts of the United States, too numerous to mention the names of them.

X-Q. 63. Is it not a fact that the great proportion of its paper stock for bag making has been purchased by the Continental Company from the International Paper Company ?

A. It is a fact.

X-Q. 64. About what percentage of the total paper stock purchased, has been obtained from the International Paper Company ?

A. I should judge about three-fourths.

X-Q. 65. Has not the contract or actual purchase price of paper by the Continental Company from the International Co., been lower than you have obtained similiar paper from other Companies, or mills ?

A. The Continental Paper Bag Company has not purchased any papers from other mills, which were like the papers furnished them from the International Paper Company, and therefore a comparison cannot be made.

X-Q. 66. Please state generally the difference between the papers furnished the Continental Co., by the International Co., and by the other companies or mills ; and also the difference of its application or use in the making of bags, if any ?

A. I am not an expert to judge the product of paper mills. The difference mainly existed in the quality, color, finish, of papers made by other mills, and the use of these said papers furnished the Continental Paper Bag Company by other mills, was made for the manufacturing of paper bags, and also for furnishing wrapping papers, and papers of other description for the general use in our business.

X-Q. 67. Then as I understand you more than three-quarters of the paper manufactured into bags, by the Continental Paper Bag Company was furnished by the International Paper Company ?

A. I should judge not.

X-Q. 68. Comparing the paper obtained from the In-

ternational Co. and manufactured into bags with the paper obtained from these other mills and companies, and manufactured into bags; was not the paper furnished your company by the International Co., lower in price than the paper furnished by the other mills or companies?

A. As I have previously stated, the comparison cannot be made, except relative to the price only; as the qualities of the papers made by the International Paper Co., and other mills spoken of, are entirely different. On the general average, I should judge that the prices of the International Paper Company average lower than the prices of other mills.

X-Q. 69. Are you a stockholder in the Continental Paper Bag Company?

A. I am.

X-Q. 70. What is the total capitalization of that Company?

A. The authorized capitalization is five million dollars—two and one-half millions preferred stock, and two and one-half common stock; of which there is issued and outstanding, approximately, one million five hundred thousand dollars in preferred stock, and one million dollars in common stock.

X-Q. 71. Has the Continental Paper Company paid any dividends?

A. It has.

X-Q. 72. Referring to self-opening square bags, and machines for making them, which have been used by your Company, what letters patent does said Continental Paper Bag Co. own or control, or is it licensed under in connection with said machines and manufacture?

A. I give you the list of the patents owned by the Continental Paper Bag Company.

No. 574,020, granted on the invention of Edward E. Claussen, December 29, 1896.

No. 574,666, granted on the invention of Edward E. Claussen, January 5, 1897.

No. 586,735, granted on the invention of Edward E. Claussen, July 20, 1897.

No. 587,929, granted on the invention of Edward E. Claussen, August 10, 1897.

No. 596,260, granted on the invention of Edward E. Claussen, December 28, 1897.

No. 598,497, granted on the invention of Edward E. Claussen, February 8, 1898.

No. 623,983, granted on the invention of Edward E. Claussen, and Herman Elsas, May 2, 1899.

No. 629,888, granted on the invention of Edward E. Claussen, August 1, 1899.

The Continental Paper Bag Company also owns one undivided half of the letters patent, No. 635,090, granted on the invention of Claussen & Mortson, October 17, 1899.

The Continental Paper Bag Company does not control nor is it licensed under any other self-opening square paper bag machine patents, than above stated in this answer.

X-Q. 73. Please state by whom were manufactured the fifty-nine paper bag machines you refer to in your answer to Qs. 13 and 14?

A. The National Mfg. Co., of Elkhart, Indiana, manufactured fifty-four. The Woodward & Rogers Co., of Hartford, Connecticut, manufactured five.

X-Q. 74. In your answer to Q. 15, you say your Company has contracted for 102 more machines of that kind. With whom have you so contracted?

This question is objected to as immaterial, and as having no apparent purpose except to enable the complainant to acquire information upon which to base a suit on the Liddell patent, No. 558,969, against the party or parties inquired about. And defendant's counsel advises the witness that he may answer this question, if he deems it proper

so to do, or that he may, on the other hand, properly state that he prefers not to answer the question.

Complainant's counsel says that direct question and answer No. 15, opened up this subject as legitimate cross examination.

A. I consider the placing of business contracts a business secret; and, for that reason, I prefer not to answer the question.

X-Q. 75. I am not asking for the particulars of your contracts; but only for information which will enable me to verify your statement as to accuracy, in respect to fact of such contract having been made, and number of machines contracted for. Please answer the question without giving any detail, except the names of parties with whom the contracts have been made, and where located?

Defendant's counsel inquires of complainant's counsel, whether the comp'ainant will agree, if furnished with this information, to postpone bringing any suit on the Liddell patent, No. 558,969 (against the party or parties whose names and locations are inquired for) until after this suit is decided by the Circuit Court for the District of Maine, wherein it is pending.

Complainant's counsel will not stipulate as above, or at all, in order to obtain an answer to which he considers himself actually entitled.

Defendant's counsel states to the Court, that this suit was brought October 11, 1901; and that on December 17, 1901, the complainant brought a suit in the United States Circuit Court for the District of Connecticut against the Woodward & Rogers Company, on the Liddell patent, No. 558,969, for alleged infringement of that patent, in the manufacture by that defendant, of a few machines for the Continental Paper Bag Company; which latter suit, by reason of the absence of any right to a preliminary injunction therein, seems to defendant's counsel to have been plainly useless to the com-

plainant, except as a means of vexation. And defendant's counsel states to the Court that he believes that the only motive which complainant's counsel had or has for asking X-Q. 74, or X-Q. 75, consists in a desire to bring another vexatious suit, or other vexatious suits, on the Liddell patent, No. 558,969, against manufacturers of machinery, while the present suit against the Continental Paper Bag Company is pending, and unheard by the Court in which it is pending.

For these reasons, defendant's counsel instructs the witness that he may properly decline to answer X-Q. 74, or X-Q. 75, at this time.

A. I decline to answer the question, at this time.

X-Q. 76. Are these 102 more machines contracted for, as you state, all being built in substantial similarity as to construction and mechanism with each other?

A. They are not all substantially like each other, as near as I can understand.

X-Q. 77. How is it that you have stated in answer to Q. 15, that the Continental Company has contracted for one hundred and two more machines to be built "in general conformity to the plan of the Claussen patent, No. 598,497," and yet these one hundred and two machines are not substantially similar, as to construction and mechanism with each other?

A. Because, in addition to the mechanism employed in the Claussen patent, No. 598,497, the Continental Paper Bag Company through its president, myself, has given instructions to its mechanical engineers, to utilize any and all patents owned by the Continental Paper Bag Company in the construction of any new machinery. Besides this, (the above-stated improvements which are being contemplated for the one hundred and two machines in course of construction), these machines are contracted to make different sizes of paper bags, and as I understand it, the present general mechanism of the machines making the different

sizes of paper bags are not all alike. Those one hundred and two machines are all to be made in general conformity to the Claussen patent, No. 598,497; but they are to differ from each other in some respects.

X-Q. 78. Are the fifty-nine machines which your company has used in its factory at Rumford Falls, Maine, marked with the dates or numbers of any patents; and if so, which patents?

Objected to as immaterial.

A. They are not.

X-Q. 79. Why not?

A. I don't know.

X-Q. 80. Are any of those fifty-nine machines marked with the dates and numbers of any patents?

Objected to as immaterial; the law in respect to marking articles "patented" applying only to complainants, and not applying to defendants in patent litigation.

A. They are not.

X-Q. 81. In connection with your purchase of patents or patent rights from Mr. Claussen, I note that in answer 11, you say that you negotiated with him during the early part of 1898; and made a contract with him, and subsequent contracts; but I note that the opinion given by Mr. Albert H. Walker, in regard to the Claussen paper bag machines already referred to, bears date December 24, 1896. How does it happen that this opinion is dated so long before the period set as that of your negotiating with Mr. Claussen in 1898?

This question is objected to as calling for hearsay testimony.

A. I don't know.

X-Q. 82. As a matter of fact, this opinion of December 24, 1896, was not rendered by Mr. Walker to you, or to the Continental Paper Bag Company?

A. It was not

X-Q. 83. But as you understood, when it was first

shown and presented to you by Mr. Claussen, it was an opinion rendered to him by Mr. Walker?

A. Yes, sir.

X-Q. 84. Did you, before making your contract of purchase in relation to these Claussen patents, referred to in your testimony, obtain any other opinion as to validity, scope, etc., than that of Mr. Walker of December 24, 1896, submitted to you by Mr. Claussen?

A. I don't remember if it was before or after the date of purchase, that I submitted the Claussen patents, all of them or some of them, to the patent attorneys, Briesen & Knauth, and obtained an opinion from them.

X-Q. 85. Can you state whether this opinion of Briesen & Knauth was obtained before the Continental Paper Bag Company was organized?

A. I can. It was before the Continental Paper Bag Company was organized.

X-Q. 86. Your answer to Q. 18 led me to believe that, after seeing the opinion of Mr. Albert H. Walker, you "fully concluded that it would be prudent for the Continental Paper Bag Company to undertake the construction of such machinery, for the purpose of manufacturing self-opening square paper bags," the machinery referred to being paper bag machines in general conformity to the plan of the Claussen patent, No. 598,497. Now, if the Walker opinion of December 24, 1896, led you to fully conclude on this supposed prudent course, why did you consult Briesen & Knauth, to get an opinion from them on the same subject matter?

A. I considered it of sufficient importance to ask our counsel, Albert H. Walker, to give me the names of other patent attorneys whom he could recommend to undertake a search of the Claussen patents; and we submitted to Briesen & Knauth some of them, or all of these Claussen patents, for a thorough investigation, and to be compared with some important patents issued on paper bag machinery.

X-Q. 87. Did the Briesen & Knauth opinion consider the Liddell patent, on which this suit is brought?

A. They did not.

X-Q. 88. Does the Continental Paper Bag Company own, or has it ever owned any patent or patents, exclusive of the Claussen patent, No. 598,497, and the Claussen & Mortson patent, No. 635,090, under which operative paper bag machines for making self-opening square paper bags, have been made, by or for the Continental Paper Bag Company?

A. The Continental Paper Bag Company owns all of the patents specified in my answer to X-Q. 72, and I am informed by mechanical engineers that paper bag machinery can be constructed from any of these patents, which will successfully operate to make certain paper bags, specified in said patents.

Answer objected to as irresponsive. What I asked was not whether paper bag machines could be constructed in the opinion of your experts, but whether they had been, under the conditions of the last question. Please answer that?

Defendant's counsel objects to this question, because it requires the witness to compare each of the fifty-nine machines which have been made for the Continental Paper Bag Company, with each of the claims of each of six letters patent which are specified in reply to X-Q. 72 as belonging to the Continental Paper Bag Company, and which are exclusive of the Claussen patent, No. 598,497, and the Claussen & Mortson patent, No. 635,090; and requires the witness, having made those comparisons, without having the fifty-nine machines before him, to state whether any of those fifty-nine machines contain any invention claimed in any of those six patents. And defendant's counsel submits to the court that this question, thus calls for a large amount of expert knowledge, as a mechanical engineer, and as a

patent expert, which this witness is not shown in his direct examination to possess. But defendant's counsel states that he understands that the fifty-nine machines of the Continental Paper Bag Company, have all been made under the Claussen patent, No. 598,497, and the Claussen & Mortson patent, No. 635,090, and have not been made under any other existing patent.

A. No machines have been made by or for the Continental Paper Bag Company, for making self-opening square paper bags, which were not made under the Claussen patent, No. 598,497, or the Claussen & Mortson patent No. 635,090, or both of those patents.

X-Q. 89. When was your attention first called to the Liddell patent, No. 558,969, of April 28, 1896, in any way?

A. My attention was called the first time to the Liddell patent, through a letter dictated by Betts, Betts, Sheffield & Betts, in October, 1901.

X-Q. 90. Do you mean to testify that in the opinion of Mr. Albert H. Walker, of December 24, 1896, (and which your direct testimony says was submitted to you by Mr. Claussen before the Continental Paper Bag Company, or you yourself, embarked in the business of making and using self-opening square paper bag machines,) you found no mention of the William Liddell patent, No. 558,969, of April 28, 1896, in suit?

A. I did not find any mention of the William Liddell patent, No. 558,969, of April 28, 1896.

X-Q. 91. Please look at Complainant's Exhibit, Walker Opinion, which is a copy of the opinion of December 24, 1896, referred to; and state whether you now find any mention therein of the patent to Liddell on which this suit is brought, No. 558,969, of April 28, 1896?

Objected to as not the best evidence of the contents of Complainant's Exhibit, Walker Opinion; that opinion consisting of nearly twenty pages of typewritten statements, followed by a list of two hundred and five patents,

and it being unfair to the witness to ask him at this time, to read all those pages, and to critically examine that long list of patents, and ascertain, by means of that examination, whether or not the Liddell patent, No. 558,969, of April 28, 1896, is specified in that opinion, or in that list, by its name, its date, and its number.

A. I believe that I find this Liddell patent mentioned on page 12, of the typewritten Complainant's Exhibit, Walker Opinion.

X-Q. 92. Well, does not the paragraph on page 12, in which the Liddell patent in suit No. 558,969, of April 28, 1896, is mentioned, continue over, with reference to both the Liddell patents mentioned, upon typewritten page 13?

Objected to as calling for secondary evidence of the contents of a document which is already in evidence in the case.

A. I can't answer this question without carefully reading both pages.

X-Q. 93. Well, please carefully read both pages and answer it?

Defendant's counsel requests complainant's counsel to state why he is taking the time of the President of the Continental Paper Bag Company, to prove the contents of a written document, which is already in evidence in this case.

A. As near as I can understand page 13, it is a continuance of the questions in regard to the Liddell patents.

X-Q. 94. But page 13, is a portion of Mr. Walker's opinion. Do you not understand it?

A. I do so understand it.

X-Q. 95. Then was not your attention, in some way, namely: in this opinion of Albert H. Walker, dated December 24, 1896, when presented to you, by Mr. Claussen, as stated, called to the Liddell patent now in suit, and long prior to October, 1901; viz., in the early part of 1898?

Defendant's counsel objects to this question, as imma-

terial, because the Liddell patent, No. 558,969, of April 28, 1896, is not mentioned in that part of the Walker Opinion of December 24, 1896, which attends to the particular Claussen invention of his application, Serial No. 600,861, in pursuance of which the Claussen patent, No. 598,497, was subsequently granted; and which part of the Walker Opinion begins at the top of its typewritten page 5, and ends with the following paragraph:

"For these reasons, I conclude that this Claussen machine does not infringe claim 4, of the Lorenz & Honiss patent, No. 337,966, and it surely does not infringe any other claim of that patent. Having found that that machine does not infringe any claim of any existing patent; I can think of no reason to fear that any manufacture, sale, or use, of such machines would ever be interfered with, when being conducted under the patent, which will undoubtedly soon be granted upon this Claussen application, Serial No. 600,861."

The defendant's counsel objects to this question as immaterial, because the fact, if it be a fact, that the witness did not notice that the Liddell patent, No. 558,969, of April 28, 1896, was mentioned in the Walker Opinion, under the head of "Serial No. 606,348," or the fact, if it be a fact, that the witness did not read that part of the Walker Opinion, is immaterial to this suit; which suit has no relation whatever to the Claussen machine attended to in the Walker Opinion, under the head of "Serial No. 606,346."

A. My attention was not called to the Liddell patent, prior to October, 1901, in any way whatsoever.

X-Q. 96. But the Walker Opinion of December 24, 1896, was presented to you by Mr. Claussen, and read by you, was it not, at the time of your negotiation with him in 1898?

Objected to as immaterial, because much of that opinion had no relevancy to the Claussen machine of Serial No.

600,861, which is the only machine referred to in that opinion, and involved in this litigation.

Complainant's counsel calls the attention of the court to the extreme suggestiveness of statements made on the record by Mr. Walker in the guise of objections, as calculated to prompt the witness in his answers.

A. If I remember correctly, a document submitted to me by Mr. Claussen was *a part* of an opinion which Mr. Walker had rendered to Mr. Claussen, and if I remember correctly, the said document was read by me.

X-Q. 97. Well, in your answer to Q. 17, of the direct examination, when you were examined by your attorney, and before the question came up as to whether the Liddell patent in suit was mentioned in that opinion, you stated that you recognized this document marked "Complainant's Exhibit, Walker Opinion." Do you mean to say that a portion of that document contained on typewritten pages 12 and 13, thereof, and relating to the Liddell patent in suit, was not in that document and opinion of Mr. Walker, when the original was submitted to you by Mr. Claussen, in 1898, in connection with your negotiation?

Objected to as inaccurately stating or misstating the answer of the witness to Q. 17: and also as immaterial; and defendant's counsel suggests to complainant's counsel that if he will take more pains in framing his questions, he will make more headway in this cross examination.

A. My answer to Q. 17, was that I recognized certain paragraphs of the said document as submitted to me through Complainant's Exhibit; and I furthermore state that I do not remember at this time if the *original* opinion of Mr. Albert H. Walker was submitted to me by the said Claussen. Neither do I remember if in the said document, any mention was made of Liddell patents.

Complainant's counsel respectfully calls the attention of the Court to Mr. Walker's objection to the foregoing

question as suggestive, and followed out in the answer of the witness.

Defendant's counsel states that he does not consider it legitimate cross examination of a witness to misstate to that witness, the testimony given on direct examination; and defendant's counsel claims the right in every such instance to interpose an objection and state the reasons therefor. Defendant's counsel is aware that it is possible for attorneys of great experience to so frame cross questions as to mislead witnesses into error, where the witnesses are entirely candid and will give complete and accurate testimony, in the absence of such misleading questions; but defendant's counsel submits that the exercise of that skill ought to be discouraged.

Adjourned until Thursday, February 19, 1903, at 11 o'clock A. M.

Thursday, January 19, 1903, 11 o'clock A. M.

At request of complainant's counsel, adjourned until Friday, January 20, 1903, at 11 o'clock A. M.

Friday, January 20, 1903, at 11 o'clock A. M. Met pursuant to adjournment; counsel present as before.

X-Q. 98. You say, in answer 97, that you do not remember at this time that the original opinion of Mr. Albert H. Walker was submitted to you by Mr. Claussen. Are you making a distinction between the original and a copy, in that answer?

A. I am making a difference between the original and a copy.

X-Q. 99. Look at Complainant's Exhibit, Walker Opinion, which is the copy of Mr. Walker's opinion of December 24, 1896, which has been offered in evidence; and state whether you do not find therein the following words as part of that opinion, and under the general heading "Serial No. 606,348."

"The plan of this machine is substantially unlike that of any prior patent, except the patents to Liddell, No. 558,969, of April 28, 1896, and No. 564,288, of July 21, 1896. And this machine is unlike those patents to so considerable an extent as to fully justify the issuance of a valid and valuable patent thereon. I have no doubt that such a patent will be granted, upon such amended claims as will satisfy the Patent Office, and also secure the just rights of the inventor Claussen. After such a patent is granted, and whenever a machine is made, sold, or used, in accordance therewith, it is possible that the owner of the Liddell patents will contend that machine to be an infringement of one or both of those patents. And there will be some force in such a contention as to some of those claims; though in my opinion, no such contention can ultimately prevail in Court. If either of the Liddell patents were a primary one, and therefore, entitled to a broad range of equivalence; this Claussen machine would perhaps be held to infringe it; but both Liddell patents occupy such late places in the art, and have been preceded by so many patents and machines performing the same function, that the Court will limit them both very closely to the particular mechanisms which they respectively describe and delineate. This Claussen machine, while having some similarity to some of those mechanisms, differs therefrom quite enough to avert infringement of any of the Liddell claims, as those claims must be construed in the light of the very extensive prior art. That prior art includes many prior patents, among which may be mentioned No. 444,728, of January 13, 1891, to Lorenz; No 444,729, of January 13, 1891, to Lorenz & Claussen; No. 459,445, of September 15, 1891, to Lorenz & Claussen; and 534,512, of February 19, 1895, to Lorenz & Claussen; as well as the long line, beginning with the Leinbach, Wolle & Brunner patent, No. 242,661, of June 7, 1881, and partly delineated in the above review, of the position in

the art of the Lorenz & Honiss patent, No. 337,966, of March 16, 1886.

For these reasons, I have concluded that this Claussen machine does not infringe either of the two Liddell patents; and it does not, in my judgment, infringe any other patent of the United States, which is now in living existence."

A. I do find those words in that part of the Walker Opinion which is under the general heading "Serial No. 606,348."

X-Q. 100. Prior to the organization of the Continental Paper Bag Company, did you ever offer the Claussen patents owned or controlled by you, or by the Elsas Paper Company, to any other parties; and if so, to what parties or interests?

A. I did offer these Claussen patents for sale to the Union Paper Bag Machine Company, of which company, Mr. L. G. Fisher was the Vice-President.

X-Q. 101. Do you remember an occasion when Mr. L. G. Fisher, Mr. C. B. Stilwell, Mr. Mabie, and Mr. Pierce, called at your factory in New York City, at your suggestion or invitation, to inspect a machine for making self-opening square bottom paper bags?

A. I do remember such an occasion.

X-Q. 102. Under what patent or patents did that machine purport to be made?

A. Said machine was purported to be made under the patent issued to E. E. Claussen, No. 598,497, of February 8, 1898.

X-Q. 103. State as near as you can, or fix by other data, when that inspection of the Claussen machine at your factory occurred?

A. If I remember correctly, this inspection was during the month of May, 1898.

X-Q. 104. Did you give those gentlemen, or any of them, or the interests which they represented, any option

in connection with Claussen patents or machines, at or about that time?

A. I gave an option for the purchase of the Claussen patents, and the said machine, to the Union Paper Bag Machine Company, some time during the month of May, June or July, 1898. It may have been a little later than the month of July.

X-Q. 105. What became of that option?

A. That option was renewed at its expiration. And a new option was granted the Union Paper Bag Machine Company for the purchase of these Claussen patents, and the Claussen machine, until some time in November, 1898. At the expiration of that time, I communicated with Mr. L. G. Fisher, Vice-President of the Union Paper Bag Machine Company, for the purpose of securing an expression from him in regard to his contemplated purchase. Mr. Fisher through various communications, by letters and telegraph, asked me to take no immediate action towards the disposition of the property offered his company, and promised to see me as often as he could, and talk the matter over with me. He finally, in the spring of 1899, if I remember correctly, informed me that I had been very courteous to him to keep this matter open, and he would not ask me to wait on him or his Company any longer; because he had not been able at that time, to complete the organization of the Union Bag & Paper Company, in which Company he intended (and afterwards succeeded) to include all the paper bag factories in the United States, which manufactured self-opening square bags. If I remember correctly, my last conversation with Mr. Fisher took place in his room at the Fifth Avenue Hotel, New York City, either in the month of March or April, 1899, and at this time, he had succeeded in forming what is known to the trade as the Paper Bag Trust. He wanted to renew negotiations with me at that time; and I told him that I could not open negotiations with him. But if ever I

did, he would have to accept or reject any proposition I made him, within twenty-four hours. In speaking of the Paper Bag Trust I mean the Union Bag & Paper Company, which is practically the same corporation as the Union Paper Bag Machine Company.

X-Q. 106. Well, as a matter of fact, the option expired and was never availed of by Mr. Fisher, or the interests he represented?

A. It is true that the option expired and was never foreclosed; but it is also true that Mr. Fisher tried to reopen negotiations for another option.

X-Q. 107. What has become of that original machine which you showed to Mr. Fisher in connection with the option referred to?

A. The machine is at Rumford Falls, at our factory; but I cannot state if it is at the present time in its original shape.

X-Q. 108. Do you remember any criticisms made by Mr. Fisher or those interested with him, upon this first Claussen machine, as being an uncommercial machine, or as infringing upon certain patents owned by the Union Bag interests?

A. I don't remember any such statements.

X-Q. 109. Do you remember such statements being made in connection with the failure to exercise the options, given as reasons for not exercising the options?

A. I don't remember any such statements.

X-Q. 110. You speak, in answer to Q. 23, of opinion or advice given you by Mr. Walker, after you had received the letter in October, 1901, from Betts, Betts, Sheffield & Betts, in regard to infringing the Liddell patent, No. 558,969. Was Mr. Walker's opinion or advice given you in writing?

A. I believe a part of the opinion was in writing, and probably the greater part was in conversation.

X-Q. 111. In answer to Q. 26, you say that one hun-

dred and twenty-three thousand eight hundred and ninety-two dollars and sixty-five cents was the amount of money invested by the Continental Paper Bag Company in building and installing machines on general plan of Claussen Patent, No. 598,497, prior to time in October, 1901, when you received the letter notifying you of infringement of Liddell patent, in suit. How many actual commercial paper bag machines on that plan had been manufactured and installed on the part of the Continental Company, and up to that date?

A. If I remember correctly, about fifty machines.

X-Q. 112. How much does that make the average cost of manufacture and installation of each of those machines, up to that date?

A. The average cost of installation and money paid out up to that time, figures out, approximately, $2,477.85 for each machine.

X-Q. 113. Now, referring to Q. and answer 27, does that additional amount of one hundred and one thousand four hundred and thirty-nine dollars and ninety-eight cents spent from October, 1901, to the present time, relate to the fifty machines mentioned in your last answer, as well as to the nine other machines, making up the total of fifty-nine machines up to this time installed in Rumford Falls?

A. This amount relates to the fifty machines, to the nine machines, and to additional machinery in course of construction and contracted for.

X-Q. 114. How much of this one hundred and one thousand, four hundred and nine dollars and nineteen cents, relates to the fifty-nine machines already installed; and how much if any relates to the one hundred and two additional machines contracted for?

A. I am unable to state.

X-Q. 115. Does any of this sum relate specifically to

the one hundred and two additional machines now under contract ?

A. Yes, sir ; it does.

X-Q. 116. Have you any figures that could show about how much of this sum relates to the one hundred and two machines now under contract ?

A. I have no figures with me, to show that.

X-Q. 117. Can you ascertain from the books or papers of your company ?

A. I believe I could.

X-Q.118. Will you please do so,and be able to answer the question, if it can be ascertained, prior to the closing of your testimony, or else send it in, in the form of a written memorandum, which can be added to the testimony ?

A. I will send such a memorandum to be added to my deposition.

X-Q. 119. What was the average cost of the fifty-four machines delivered to your company, under the contract with the National Mfg. Co., of Elkhart, Indiana ?

A. I am unable to state, exactly ; but if I remember correctly, I should judge about seventeen hundred dollars each, to the National Mfg. Co.; but it did not include the initial expense of making working drawings, tracings, blue prints, and other mechanical engineering work in connection with the construction ; nor did it include freight charges from Elkhart to Rumford Falls, nor did it include the setting up of these machines in our factory, and the general expenses connected with the installing of said machines.

X-Q. 120. Please state, in general terms, whether your contract for the one hundred and two additional machines, is of that same nature ; not including preliminary work, nor delivery and installation ?

A. I believe that the contracts for the one hundred and two machines, are of a similar nature as the contract with the National Mfg. Co.

X-Q. 121. Why did you pick out the month of January 12 till February 10, 1903, inclusive, as the only month to show average waste on these Claussen machines, at your Rumford Falls factory?

A. Because I wanted to obtain the very latest data, from our daily report sheets.

X-Q. 122. Have you had daily report sheets on those Rumford Falls machines, ever since they were installed and started running to make paper bags?

A. We have not had such daily report sheets ever since these paper bag machines were installed.

X-Q. 123. When did you begin to get such daily report sheets?

A. I don't remember the date. But I presume the daily report sheets have been furnished from the Rumford Falls office to the New York office for perhaps a period of twelve months; but the report about the exact amount of waste made in each department of the bag factory is only of recent date.

X-Q. 124. When these Claussen Rumford Falls machines were first installed, and during the period down to the time when you began to get reports of the exact amount of waste; in what shape were the reports and information as to the running of those machines, and the waste from them rendered to your company, or secured and filed at the Rumford Falls office?

A. At the beginning, when the Rumford Falls Claussen machines were in operation at our factory, no special records were kept in regard to the waste made on such machines, or the production of the machines. Probably within the last twelve months, the production of these Claussen machines was reported daily, but the waste made in the bag factory and reported, if it was reported, included the waste from all the departments.

X-Q. 125. Do you mean to say that in installing and starting the running of the fifty-nine Claussen machines

no records were kept of the number of bags they manufactured, and of the amount of wastage in connection with such manufacture, until about one year ago, viz., about February, 1902?

A. I mean to say that no reports or records to show the production or the waste of these Claussen machines, approximately prior to a year ago, were kept.

X-Q. 126. What was the matter; was the wastage too large to put on your books?

A. I don't know what was the matter, except we had more important business to attend to.

X-Q. 127. When were you informed by Mr. Walker that you would be asked to state the percentage of waste from the Claussen machines during some selected month—I mean, when was that first suggested to you?

A. The early part of February, 1903.

X-Q. 128. From what source did you derive the figures you have given, in respect to the average waste of these machines?

A. I derived this information from our daily report sheet, and the figures were gotten up by our record-keeper.

Adjourned until Saturday, February 21, 1903, at 11 o'clock A. M.

Saturday, February 21, 1903, at 11 o'clock A. M. Met pursuant to adjournment; counsel present as before.

X Q. 129. Please, in answer to this question, read on the record, the reports sent you, and to which you have referred in giving your testimony, as to waste on the Rumford Falls machines, in the month ending February 10, 1903?

A. I first read a report of February 16, 1903, furnished me by Mr. Masseur, the record-keeper of the Continental Paper Bag Company, and which report is as follows:

Feb. 16, 1903.

H. ELSAS, Esq., Pres't.,

Dear Sir.—According to the Rumford Falls Production Reports; we produced in the time from January 12th to February 10th, A. B. C. Bags in the approximate weight of

	810377 Lbs.
Machine waste reported—	54247
	864624 Lbs.

Showing 6.27% waste.

Respectfully yours,

(Signed) MASSEUR.

I also read a report of February 16, 1903, furnished me by Theodore Hawley, General Superintendent of the Rumford Falls factory, of the Continental Paper Bag Company, and which report reads as follows:

RUMFORD FALLS, Maine, Feb. 16th, 1903.

Mr. H. ELSAS, President,
New York City.

Dear Sir.—We received your telegram about average percentage of waste, to which we replied as follows, "Smallest average waste one machine January tenth, February seventh, three one-half per cent," which we now confirm. The smallest average percentage of waste for any one machine in the A. B. C. department from Jan. 10th to Feb. 7th was on #81, 1-lb. machine, and was as follows:

Jan. 10th to Jan. 17th—3%.
" 17th " " 24th—4%.
" 24th " " 31st —3%.
" 31st " Feb. 7th—4%.
Average—3½%.

Hoping the telegram gave you the desired information, I remain,

Yours truly,

THEO. HAWLEY,
Superintendent.

X-Q. 130. Have you any personal knowledge in regard to these percentages of waste given, as above, and for the period referred to; or is your knowledge as testified, in your direct deposition based on these reports?

A. I have no personal knowledge of the waste question; but my information is entirely derived from these reports, as testified.

Complainant's counsel now objects to the testimony of this witness, in fixing the amount and percentage of waste, as not the best evidence and based on hearsay.

Mr. Walker claims that the reports above testified to are admissible evidence, when thus verified by the President of the Continental Paper Bag Company, as being the reports received by him in the regular course of business of that Company, from those whose duty it is to keep the statistics represented by the reports; and Mr. Walker suggests that if this rule of evidence were otherwise, it would be necessary to go back of those who made the reports, and take the testimony of those who actually counted or weighed the good bags, and the defective bags, which were made by each of the machines during each of the days covered by these reports; which plan of ascertainment, would be so impracticable, as to prevent the Court from obtaining information upon the subject of waste, in any way.

Complainant's counsel points out that no cross examination on this subject as to matters of fact connected with wastage, is possible, because the witness has no personal knowledge on the subject, and those who have such knowledge are not produced.

X Q. 132. Is it a fact that the diameter of the core or

roll is the same, viz.: "about two inches in diameter" for all the different sizes of Claussen self-opening square paper bag machines, operated at Rumford Falls?

A. If I remember correctly, the diameter of the hole through which the core or roll-shaft is put through, is approximately two inches for all of the Claussen machines in operation at Rumford Falls.

X-Q. 133. Do you not know, or at least have you not been informed by reports, or memoranda from the Rumford Falls factory, that the average wastage on these Claussen machines referred to, and for periods prior to Jan. 10, 1903, has been much greater than six and twenty-seven one hundredths per cent.; say for previous periods lasting a month?

A. I don't remember of having received such reports; and in further explanation, I wish to state, as I stated previously, that our system for receiving waste reports from the Claussen machines, and from other machines, has only been inaugurated very recently; probably not longer than two or three weeks before January 15, 1903.

X-Q. 134. Do you remember any statement of percentage of waste made to you, for any period on these Claussen machines, other than what you have produced here in evidence?

A. I don't remember any such reports for any given period; but I do remember verbal reports made to me by the superintendent, or one of the men in charge, that the waste runs from 2 per cent. upwards, depending greatly upon the quality of the paper.

X-Q. 135. Are you able to state what proportion of the bags turned out by these Claussen machines at Rumford Falls, during the year 1902, were actually shipped out as salable or to be sold, and as compared with imperfect or defective bags made by these machines which were not good enough to attempt to sell?

A. I am unable to state the figures of the proportion you ask for.

X-Q. 136. Do any books or papers of your company, either here or at Rumford Falls, show, or endeavor to show such facts?

This question is objected to as likely to mislead the witness and the Court, because it is ambiguous in its description of the first class of bags, referred to therein; and defendant's counsel suggests to complainant's counsel that the question ought to be amended so as to call for evidence of the proportion of merchantable and unmerchantable self-opening square paper bags, made by the Claussen machines.

A. I don't think so.

X-Q. 137. Well, did you keep, in the year 1902, any record of what may be called good merchantable bags, as compared with unmerchantable bags, under your inspection, and as turned out by these Claussen machines?

A. The only record of bags made on the Claussen machines in 1902 are the records of sales of such bags and the record of stock on hand, at the beginning of the year 1902, and the record of stock on hand at the end of 1902. But no record was kept of the waste or imperfect bags made on the Claussen machines during the year 1902.

X-Q. 138. Were not the bags and product of these Claussen machines subject to inspection at Rumford Falls for the purpose of rejecting imperfect bags?

A. All bags at our Rumford Falls factory are subject to inspection, and, of course, the bags made on the Claussen machines also.

X-Q. 139. Have no records been kept of such inspection of bags turned out by these Claussen machines, from the periods when such machines were put into commercial running and down to date?

A. There are no records to show the inspection; but there are records to show the wastage, which wastage includes waste paper and imperfect bags, together.

X-Q. 140. Do you remember that your company ever had turned back as imperfect, and unmerchantable, paper bags made by these Claussen machines, and which you had delivered to customers?

A. I don't remember any such instance.

X-Q. 141. Where was located the room through which you passed in which Stilwell machines were in operation, as you say in answer 37?

A. The room was located in the factory building of George West of Balston Spa, New York; which factory now belongs to the Union Bag & Paper Company.

X-Q. 142. Are you able to state or approximate, what portion or percentage of the paper run through the Claussen machines referred to, results in merchantable bags?

A. The proportion is ninety-three and seventy-three one hundredths per cent; as shown in the report in answer to X-Q. 129.

X-Q. 143. Are you able to state how many hours a day during this month, ending Feb. 10, 1903, these Claussen machines ran?

A. The Claussen machines were operated duringthat time, ten hours for each working-day, with the exception of nine hours on Saturday; and some Claussen machines making sizes absolutely needed immediately, were sometimes operated a few hours in excess of the hours stated.

X-Q. 144. In your negotiations with Mr. Chisholm, in connection with forming or starting the Continental Paper Bag Co., did you submit to him the Walker Opinion of December 24, 1896, and the Briesen & Knauth Opinion, already referred to?

A. If I remember correctly, I either submitted all the documents which had bearing on the subject of searches for prior patents to Mr. Chisholm, or to his counsellor, Mr. Frederick B. Jennings, of the firm of Stetson, Jennings, and Russell.

X-Q. 145. In making your deal with Mr. Chisholm in connection with the starting of the Continental Paper Bag Company, do you remember making use of the option that you had given to Mr. Fisher?

A. No, sir, I never submitted that option to Mr. Chisholm. At least, I don't remember that I ever did.

X-Q. 146. Do you remember any incident of this nature in connection with those negotiations with Mr. Chisholm, that you told Mr. Chisholm, that Mr. Fisher had made you an offer for the Claussen patents and rights, and as an inducement to Mr. Chisholm to close with you?

A. I don't remember any such conversation.

X-Q. 147. Have you any objection to letting me see the Briesen & Knauth Opinion referred to?

A. I have no objection to showing you the Briesen & Knauth Opinion.

X-Q. 148. Who are the mechanical engineers who informed you as stated in answer 88, in regard to construction of operative paper bag machinery from patents specified in your answer to X-Q. 72?

A. The names of the mechanical engineers are Edward E. Claussen, Charles F. Smith; and our head machinist, Mr. Fred Strassburg, whom we consider a mechanical engineer.

X-Q. 149. Referring to the period ending Feb. 10, 1903, for which the average waste has been computed, who furnished the papers used in the Claussen machines during that month?

A. The paper used in operating and making bags on the Claussen machines, was furnished by the International Paper Company.

X-Q. 150. Are you able to state how many of the fifty-nine running Claussen machines were actually operated during this month, ending Feb. 10, 1903?

A. I think out of the fifty-nine machines, fifty-seven machines were in operation more or less, during the said period.

X-Q. 151. You have stated that the Continental Paper Bag Company has paid dividends. Please inform me on what dates, and on what per cent. and on what character and amount of its stock?

Defendant's counsel objects to this question as immaterial; and though the interests of this defence do not require that the information called for, shall be withheld, the witness is instructed that if there is any reason unconnected with the defense of this suit, why the information asked for, should not be given, to complainant's counsel, and to the complainant; then the witness may properly decline to answer the question.

A. If I remember correctly, the Continental Paper Bag Company paid its first dividend on its preferred stock, then outstanding, on July 1, 1900, and it has paid since that date every three months, a dividend of one and one-half per cent. upon its preferred stock outstanding, as it appeared on the books from time to time. It has never paid any dividend on its common stock.

X-Q. 152. Was this dividend on preferred stock paid on the entire amount of preferred stock issued and outstanding at the times the dividends were to be paid, or were they paid only on a certain portion or character of such preferred stock; namely, that portion actually paid for in, and issued for, cash?

A. The dividends were paid on the entire preferred stock outstanding and issued.

X-Q. 153. As President of the Continental Paper Bag Company, what share did you have in concealing from the complainant, and its attorneys, the construction and operation of these Claussen machines, made at Elkhart, Indiana, and at Hartford, Connecticut, and installed in the Rumford Falls factory, and when you were either directly or through your counsel, Mr. Walker, asked by complainant's counsel, to permit an inspection of said machines under proper conditions, or at least to furnish blue prints

and description of said machines, and shortly after this suit was begun ?

Defendant's counsel objects to this question, because it is out of conformity with the history which it purports to set forth and relevant to which the witness is asked what share he had ; and defendant's counsel suggests to complainant's counsel, that he ought to ask the witness for information, instead of telling a story of his own in the question, and then asking the witness what share he had in the doings alleged to be represented by that story.

A. I had no share in it, excepting I informed our counsel, Mr. Albert H. Walker, to use his own judgment in the matter.

X-Q. 153½. What reason did you have for concealing the construction and operation of these machines, as was actually done through your counsel, from proper inspection by complainant's counsel, in connection with their proposed opening testimony in this case ?

Objected to as out of conformity with what the defendant's counsel did, in pursuance of his own judgment relevant to declining to assist the complainant, in its prosecution of the case, against the defendant.

Complainant's counsel refers to the record on this point, made in connection with complainant's opening testimony.

A. I had no reason, except upon the advice of counsel, Albert H. Walker, which was to the effect not to show these machines to the complainant.

Cross-examination closed.

Re-direct examination by Mr. Walker :

R-D-Q. 154. When did you personally retain Albert H. Walker to be your attorney in connection with your Claussen paper bag machine enterprise ?

A. January 28, 1898.

R-D-Q. 155. When did the Continental Paper Bag Company retain Albert H. Walker to be its attorney in

connection with the paper bag machine business of that Company?

A. In April or May, 1899.

R-D-Q. 156. State whether that relation of attorney and client between the Continental Paper Bag Company and Albert H. Walker has continued ever since the original retainer in April or May, 1899.

A. It has continued ever since that time until now.

R-D-Q. 157. In reply to Q. 17, you said that you recognized that part of "Complainant's Exhibit, Walker Opinion" which begins with the line reading "Serial No. 600,861" and ends with a paragraph which is quoted in that question, and which paragraph ends with the word and numeral "Serial No. 600,861," as being the "complete search" which had been made by Mr. Walker, and which was submitted to you by Mr. Claussen, as evidence that machines built on the general plan of the Claussen patent, No. 598,497, would not infringe any prior patent. And in reply to X-Q. 96, you said that if you then remembered correctly, a document submitted to you by Mr. Claussen was *a part* of an opinion which Mr. Walker had rendered to Mr. Claussen. Now, please to produce, if you can, the original document which was submitted to you by Mr. Claussen, and which you had in mind, in giving your answer to Q. 17, and in giving your answer to X-Q. 96?

A. I now produce the said document called for by the question.

Mr. Walker offers in evidence the document just produced by the witness, and requests that it be marked "Elsas Exhibit, No. 1," and it is accordingly so marked.

Objected to by complainant's counsel, as purporting to be only a copy of a portion of the original document, and attention is called to the direct testimony of this witness and to Qs. and As. 17 and 18, as bearing on this subject.

R-D-Q. 158. Please to state whether during the days which have passed since you answered Q. 17 and X-Q. 96,

you have compared the matter in Elsas Exhibit, No. 1, which begins with the line "Serial No. 600,861," and which ends with the end of that exhibit, on the one hand; with that portion of "Complainant's Exhibit, Walker Opinion" which begins with the line "Serial No. 600,861," and ends with the paragraph quoted in Q. 17 of your deposition?

A. Yes.

R-D-Q. 159. Please to state whether you found, upon making that comparison, that the matter compared agreed or disagreed?

A. The matter compared agreed, with the exception of two words.

R-D-Q. 160. Please to state the first of those differences, and also the second of those differences?

A. The first of the differences is as follows: in the sentence "because its function for forming a diamond fold" read in Complainant's Exhibit, Walker Opinion "because its function of forming a diamond fold." The sentence "Moreover the subject matter for claim" reads in the Walker Exhibit "Moreover the subject matter of claim."

R-D-Q. 161. Please to produce the opinion of Briesen & Knauth which was referred to in several places on your cross-examination?

A. I hereby produce that opinion.

Mr. Walker offers in evidence the document last produced by the witness, and requests that it be marked "Elsas Exhibit, No. 2," and it is accordingly so marked.

R-D-Q. 162. Please to produce all the letters you wrote to Albert H. Walker, and all the letters which Albert H. Walker wrote to you, relevant to the relations of the Claussen patent, No. 598.497, of February 8, 1898, to the art of paper bag machines; after you retained Mr. Walker, on January 28, 1898, and while you were considering whether to undertake the enterprise of establishing a cor-

poration, or other business concern, for the purpose of making and using paper bag machines under that patent?

A. I hereby produce these letters, giving the dates as follows, and the names of the sender and the receiver respectively:

My letter to Mr. Albert H. Walker, of February 15, 1898. His reply of February 16, 1898. My letter to Mr. Albert H. Walker, of February 17, 1898. His reply of February 18, 1898. My letter to Mr. Albert H. Walker, of February 19, 1898. His reply of February 21, 1898. My letter to Mr. Albert H. Walker, of February 23, 1898.

Mr. Walker offers in evidence the seven letters produced by the witness in reply to the last question, and requests that they be marked "Elsas Exhibits 3, 4, 5, 6, 7, 8, 9," respectively, in the order of their dates, and they are accordingly so marked.

R-D-Q. 163. It appears that in your letter of February 15, 1898, to Mr. Walker, you asked him to recommend some other lawyer, who would be capable of going over the patents referred to in his "review and search of the Claussen patent"; and it appears in Mr. Walker's reply of February 16, 1898, that he did recommend Betts, Sheffield, Betts, and Betts; and Francis T. Chambers, and Frederick P. Fish, and Edmund Wetmore, and Rowland Cox, and A. V. Briesen, and B. F. Lee, and John R. Bennett, in that order, as being patent lawyers whose opinions would deserve great weight, when arrived at after adequate and deliberate examination of the paper bag machine patents involved. And it appears in your letter of February 17, to Mr. Walker that you stated to him that the parties whom you wish to interest in the proposed Company, had selected Mr. Briesen for the purpose in view. Now please to state whether you did employ Mr. Briesen to review Mr. Walker's work, at least to some extent, and if so, with what results?

A. I did employ Mr. Briesen, and he gave me his

opinion of March 12, 1898, which has been offered in evidence as "Elsas Exhibit, No. 2."

R-D-Q. 164. Now, please to produce a letter which was written to the Continental Paper Bag Company, by Albert H. Walker, its attorney, August 18, 1899?

A. I hereby produce this letter of August 18, 1899.

Mr. Walker offers in evidence the letter of August 18, 1899, and requests that it be marked "Elsas Exhibit, No. 10," and it is accordingly so marked.

Objected to as immaterial.

R-D-Q. 165. You stated in reply to Q. 22, that when you received a letter in October, 1901, from Betts, Betts, Sheffield and Betts, claiming that the self-opening square paper bag machines of the Continental Paper Bag Company, were infringements of the Liddell patent, No. 558,969, of April 28, 1896; you consulted Mr. Walker upon that subject; and in reply to Q. 23, you stated that Mr. Walker thereupon informed you that those Claussen machines did not infringe that patent; and on cross examination you stated that you believed this information was given in writing, and also in conversation. Please now, to produce, if you can, any communication in writing which you received from Mr. Walker, such as you referred to on your cross examination, in this behalf?

A. I hereby produce the said written communication, which is a letter dated October 19, 1901, and received by the Continental Paper Bag Company, on October 21, 1901.

Mr. Walker offers in evidence the letter of October 19, 1901, and requests that it be marked "Elsas Exhibit, No. 11," and it is according so marked.

R-D-Q. 166. Please now to look at the Elsas Exhibits, Nos. 3 to 11, inclusive, and state whether the written signatures of yourself, and of Albert H. Walker, which are subscribed to those nine letters, are the genuine signatures of yourself and Mr. Walker respectively.

A. They are genuine signatures of myself and Mr. Albert H. Walker.

R-D-Q. 167. How does it happen that the Continental Paper Bag Company has made or caused to be made and used, fifty-nine paper bag machines under the Claussen patent, No. 598,497, and also under the Claussen & Mortson patent, No. 635,090, and is proposing to make one hundred and two more machines, under both those patents; notwithstanding the fact that the practical complainant in this case, the Union Bag & Paper Company, owns one undivided half of the Claussen & Mortson patent, No. 635,090? I mean to inquire how it happens that the Continental Paper Bag Company has thus acted, and proposes to thus act, under that patent, without the consent of its co-owner, the Union Bag & Paper Company?

A. Because as I understand, the half ownership in a patent, entitles the parties to all the rights, as though they owned the patent entirely.

R-D-Q. 168. What rights do you have in mind, as "all the rights", when you use that phrase in your last answer?

A. I have the rights in mind, to construct paper bag machinery in conformity with the patent, No. 635,090, of October 17, 1899, and to use such machinery or sell it.

Mr. Walker offers in evidence the following self-proving documents:

An assignment executed by Albert H. Walker, as trustee, January 12, 1898, to Edward E. Claussen, of the entire ownership and title in and to sundry inventions and letters patent specified therein, including the invention embodied, described and claimed in the Claussen application, No. 600,861, of July 29, 1896; and which assignment was acknowledged by the assignor, before James J. Quinn, Notary Public, January 12, 1898.

An assignment executed by Edward E. Claussen, to Herman Elsas, May 26, 1898, of the entire ownership,

right, title and interest, in and to sundry letters patent specified therein, including No. 598,497, of February 8, 1898; and which assignment was acknowledged by the assignor, before Charles A. Safford, Notary Public, July 17, 1898.

An assignment executed June 6, 1899, by Herman Elsas to the Continental Paper Bag Company, of all his right, title and interest in sundry letters patent including No. 598,497, of February 8, 1898; and which assignment was acknowledged by Mr. Elsas before E. W. Kennedy, Notary Public, June 6, 1899.

An assignment executed November 6, 1899, by Edward E. Claussen, to the Continental Paper Bag Company, of one undivided half of the entire right, title, interest and ownership, in and to Letters Patent of the United States, No. 635,090, granted October 17, 1899, to Edward E. Claussen and George Mortson; and which assignment was acknowledged November 7, 1899, by Mr. Claussen before Henry D. Mildeberger, Notary Public.

All the above assignments are objected to as immaterial.

Mr. Walker presents a document consisting of seven sheets of paper, permanently fastened together with eyelets, which he states to be a true copy of the four assignments last offered in evidence, including the notarial certificates, attached to each of those assignments, or subscribed thereto; but not including the certificates which are attached thereto respectively, of the Commissioner of Patents stating that the respective assignments were recorded in the Patent Office, on January 31, 1898, June 20, 1898, June 27, 1899, and November 13, 1899, respectively.

Complainant's counsel agrees that the document thus produced by Mr. Walker, may be marked "Defendant's Exhibit, Defendant's Title-papers" and may be used and read in this case, with the same effect as the original as-

signments above offered in evidence, subject to correction by said originals, if necessary.

And defendant's counsel offers in evidence, the document thus marked "Defendant's Exhibit, Defendant's Title-papers" and requests that it be marked "Charles E. Smith, Notary Public," and it is accordingly so marked.

R-D-Q. 169. How much preferred stock, and how much common stock, do you now own in the Continental Paper Bag Company?

A. I own twelve hundred shares of preferred stock, par value of each share, $100.00., and I own two thousand shares of common stock, par value of $100.00., per share.

R-D-Q. 170. What proportion of the stock of the Elsas Paper Company, did you own, when the property and business of that Company was transferred to the Continental Paper Bag Company, in 1899?

A. I owned about seventy per cent of the stock of the Elsas Paper Company, at that time.

R-D-Q. 171. In transferring your share of all the property of the Elsas Paper Company, to the Continental Paper Bag Company; and in transferring to the Continental Paper Bag Company, the ownership of the Claussen patents, and the Claussen machine, and other property which you had purchased from Claussen, and which you had added to, out of your own money, after that purchase, and before the sale to the Continental Paper Bag Company; did you take your pay in the stock of the Continental Paper Bag Company, or did you take your pay in cash, or did you take your pay partly in stock and partly in cash; and if the latter, in what proportions, did you receive stock and did you receive cash?

A. For the holdings of stock in the Elsas Paper Company, I received preferred stock in the Continental Paper Bag Company, to the amount of one thousand five hundred shares preferred stock, at the par value of $100.00 per share. For the Claussen patents, I received, after the

Continental Paper Bag Company was organized, the sum of $13,000. in cash in full payment for all the Claussen patents, and for the Claussen machine, and such additional machinery, tracings, blue-prints and working drawings that had been completed up to that date, in connection with the building of a second Claussen machine.

R-D-Q. 172. Suppose the court having jurisdiction in this case were to issue and enforce a permanent injunction and thereby stop the use by the Continental Paper Bag Company of its fifty-nine Claussen self-opening square paper bag machines, and thereby stop the Continental Paper Bag Company in its work of building one hundred and two more Claussen self-opening square paper bag machines, and also thereby prevent the Continental Paper Bag Company from either making, using or selling any such machines until after April 28, 1913, what effect would that injunction have upon the prosperity of the Continental Paper Bag Company?

Objected to as hypothetical.

A. Such an injunction would have a most disastrous effect on the prosperity of the Continental Paper Bag Company and result in great financial loss. It would, furthermore, result in the disorganization of its entire paper bag factory at Rumford Falls, Maine, and would discharge five hundred or more operators.

R-D-Q. 173. What effect would such an injunction have upon the business of the Union Bag & Paper Company by relieving that company from all competition in self-opening square paper bag production throughout the United States, except possibly the small competition of Mr. Westervelt in South Bend, Indiana?

Same objection.

A. It would have the result that the scope of monopoly exercised by the Union Bag & Paper Company, in producing self-opening square paper bags, and selling them to

the public, would be greatly enlarged, and much add to the prosperity of that company.

R-D-Q. 174. What effect would such an injunction have upon the prices which the public would be compelled to pay for self-opening square paper bags, after the Union Bag & Paper Company had driven the Continental Paper Bag Company out of that business, by means of such an injunction?

Objected to as immaterial, hypothetical, not proper redirect examination.

A. The history of the Union Bag & Paper Company proves that as long as they have a monopoly of producing and manufacturing self-opening square paper bags, the public will pay a higher price for such paper bags, than it pays to-day; and it is reasonably supposed that having regained the monopoly of such paper bag trade, the public would be compelled to pay a higher price for such paper bags.

R-D-Q. 175. It appears in your testimony, that the present product of self-opening square paper bags in the United States, is more than twelve millions per day, or about four thousand millions per year. Now, please to state as approximately as convenient, what amount of money the manufacturers of those four thousand millions self-opening square paper bags during the year 1903, will receive for them?

Objected to as immaterial.

A. They will receive approximately, four million five hundred thousand dollars.

R-D-Q. 176. Now, suppose an injunction to go into effect at the end of 1903, to permanently stop the production of such paper bags by the Continental Paper Bag Company; and suppose the Union Bag & Paper Company, to furnish four thousand million self-opening square paper bags to the public, in the year 1904; about how much would you expect the Union Bag & Paper Company to ad-

vance its prices in 1904, after being entirely relieved from the competition of the Continental Paper Bag Company on self-opening square paper bags? That is to say, how much more would the public have to pay for four thousand millions self-opening square paper bags in 1904, with the Union Bag & Paper Company, having a substantial monopoly of that business, than it would have to pay if the competition of the Continental Paper Bag Company were to continue, with the same magnitude as at present?

Objected to as without any foundation, calling for mere guess-work, immaterial, and not relating to the cross-examination.

A. From past experience, I should judge that the public would have to pay for the four thousand millions paper bags, eight hundred thousand dollars per year, more than they would have to pay, if the Continental Paper Bag Company continued to manufacture self-opening square paper bags.

R-D-Q. 177. How much, if at all, was the Union Bag & Paper Company compelled to reduce its prices to the public, by the competition which was established in the manufacture of self-opening square paper bags, by the Continental Paper Bag Company, through the use of its Claussen machines in Rumford Falls, Maine?

Objected to as without foundation laid, and as immaterial.

A. The Union Bag & Paper Company was compelled to reduce its price on an average of 15 to 20 per cent., by the competition through the Continental Paper Bag Company.

R-D-Q. 178. Suppose an injunction in this suit to operate to stop at the end of 1903, all the manufacture of self-opening square paper bags by the Continental Paper Bag Company; and suppose that injunction should operate to prevent all further use till after April 28, 1913, of any of the Claussen machines of the Continental Paper Bag Company; and suppose that on January 1, 1904, the

Continental Paper Bag Company had somehow procured a plan for a new self-opening square paper bag machine, which nobody would claim to be an infringement of any one of the more than two hundred paper bag machine patents which would be in existence and full life in 1904; and suppose that the Continental Paper Bag Company should be able to somehow raise new capital, with which to build such new plant of paper bag machinery; and on those suppositions, state how long you judge it would take to build as many as fifty-nine new machines, to make nineteen different sizes of self-opening square paper bags, and to install those new machines, and get them into operation, making paper bags in Rumford Falls, Maine, or elsewhere in the United States?

Objected to as immaterial, hypothetical and not proper re-direct examination.

A. It would approximately take from four to five years to produce such a number of machines, for making self-opening square paper bags.

R-D-Q. 179. Now, personally, I regard this suit as a sort of a gambling enterprise, conducted at the expense and for the benefit of the Union Bag & Paper Company, in the name of the Eastern Paper Bag Company, by a great array of distinguished counsel from the City of New York and the City of Philadelphia; and that the stake invested is what is a paper patent, namely: the Liddell patent, No. 558,969, (which neither the Eastern Paper Bag Company, the Union Bag & Paper Company, or any other person, partnership or corporation, anywhere in the world, ever tried to follow in making any paper bag machine, plus only the fees and expenses which the Union Bag & Paper Company has paid, is paying, and may hereafter pay in prosecuting this suit. Now, assuming that I am right in respect of the stake *invested* in the gamble; please to state about how much money that investment would *win*, for the Union Bag &

Paper Company, in your judgment, if the gamble should be crowned with success, by the United States Circuit Court for the District of Maine, in the issuance and enforcement of an injunction, to stop the self-opening square paper bag business of the Continental Paper Bag Company, for at least four years?

Objected to as without foundation, calling for mere guess-work, and not proper re-direct examination.

A. The stake of the gamble would in my judgment amount to a sum from eight hundred thousand dollars per year, to one million dollars per year, of extra profit to the Union Bag & Paper Company, for the four years; and it would furthermore enhance the value of their stock, both preferred and common.

R-D-Q. 180. If you have investigated the point, please now to give the information called for by complainant's counsel in X-Qs. 114 to 118, inclusive; by stating what portion of the one hundred and one thousand four hundred nineteen dollars and nineteen cents spoken of in your deposition, relates to the one hundred and two additional machines, which have been contracted for by the Continental Paper Bag Co.

A. The sum of twenty-five thousand dollars, relates to the one hundred and two additional machines which have been contracted for. And all the rest relates to the fifty-nine machines which have been built.

Re-cross examination by Mr. Betts:

R-X-Q. 181. If a firm or corporation started into manufacture paper bag machines, and having made them to manufacture paper bags thereon, and your counsel learned in the paper bag patent law, Mr. Albert H. Walker, were to advise you that such machines and their use, infringed on patents owned by your Company—some of the Claussen patents, for example; would you feel justified in suing them, and in endeavoring to obtain and preserve

whatever monopoly you had under such Claussen patent or patents, which you believed to be infringed?

A. My judgment, if I was justified in bringing such a proceeding, would be based entirely upon circumstances connected with such a case.

R-X-Q. 182. Your feelings of general philanthropy towards the public would not enter very largely into the decision of that question, would it?

A. I would entirely consider it on a business standpoint, and weigh the *pros* and *cons* very carefully.

R-X-Q. 183. And the principal *pros* and *cons* would be whether you thought you would sustain your monopolistic Claussen patents, and get an injunction against the infringers, and an exclusive right, so far as those patents would give to you. Is that about the business proposition?

A. My personal experience and judgment would impress upon me a great responsibility in deciding a question of this kind, and I should be guided entirely by the wishes of our Board of Directors; which Board I would expect to pass with great prudence on a question of this kind, in regard to its financial outcome, the general impression upon the public, and more so the general impression upon the trade, and in addition to the advice of the Board and Directors, I should be greatly guided by eminent counsel in this matter.

R-X-Q. 184. Are your Board of Directors philanthropists or business men?

A. Both.

R-X-Q. 185. As a matter of fact, did not your company start in by cutting prices on self-opening square-bottom paper bags?

A. I presume they did start to cut the prices on self-opening square bags.

R-X-Q. 186. Was that to get business; or out of kindness to the public?

A. I consider it a good stroke of business policy for the Continental Paper Bag Company to enter the market with cut prices.

R-X-Q. 187. Would you hesitate to get an injunction against the Union Bag & Paper Company, on any patents your company owned, if you could do so, and because the result might be the manufacture of a less number of paper bags next year and an opportunity for your company to raise your prices?

A. This matter, as I have stated, would have to be left entirely to the decision of our Board of Directors. Personally I would not take any such responsibility.

R-X-Q. 188. Well, you mean you would not do it alone as President of the Company. Is that it?

A. That is correct.

R-X-Q. 189. You have given in answer 179, a statement of figures. What is that, other than a mere guess on your part, as to value of sustaining the Liddell patent, in suit, to the Union Bag & Paper Company, in the four years thereafter?

A. This is not guess-work; but is arrived at by actual experience with the prices which the Union Bag & Paper Company have been exacting from the public; and it is a line of their policy as it has been experienced by me within the last twenty years; because I have had business experience with the constituent companies for that period of time, and these constituent companies are practically now the Union Bag & Paper Company.

Re-re-direct examination.

R-R-D-Q. 190. Prior to the formation of the Union Bag & Paper Company, in 1899; what corporations in the United States were engaged in making and selling self-opening square paper bags?

Objected to as not proper re-direct.

A. The names of the firms and corporations were as follows: Union Bag & Paper Company, Sandy Hill, New

York. Hollingsworth & Whitney Company, Watertown, Massachusetts. George West, Ballston Spa, New York. Consolidated S. O. S. Bag Company, with factories in Brooklyn, New York, and Plantsville, Conn. The Samuel Cupples Paper Bag Co., St. Louis, Mo. The Western Paper Bag Company, Batavia, Illinois.

R-R-D-Q. 191. Were all these companies united into the Union Bag & Paper Company, a New Jersey corporation, in 1899, under the presidency of Mr. L. G. Fisher?

A. All the corporations and firms named in my last answer were merged into the Union Bag & Paper Co., a New Jersey corporation, in 1899, under the presidency of Mr. L. G. Fisher.

Same objections.

R-R-D-Q. 192. What was the result of that consolidation upon the prices which the public had to pay for self-opening square paper bags, after that consolidation, until the time when the Continental Paper Bag Company got machines enough running to practically compete with the Union Bag & Paper Company?

Same objections.

A. The result of this consolidation upon the prices which the public had to pay for self-opening square paper bags, was an advance in prices of twenty-five per cent. or more, than the public had paid before the organization of the paper bag trust, by which name the Union Bag & Paper Company is known to the public.

R-R-D-Q. 193. What effect resulted (upon prices which the public had to pay for self-opening square paper bags) from the competition of the Continental Paper Bag Company, as soon as that company became fairly well established, in the business of making and selling a proper assortment of sizes of those bags?

Objected to as immaterial, and not proper re-direct examination.

A. After the Continental Paper Bag Company was en-

abled to offer to the trade a full assortment of sizes, the prices which the public had to pay, to the Union Bag & Paper Company, were less than the public had to pay before the Continental Paper Bag Company manufactured its product as stated.

R-R-D-Q. 194. Assuming that the business of the Continental Paper Bag Company will not be stopped or interfered with by any injunction, about how many of the one hundred and two machines, which have been contracted for, will be put into operation manufacturing self-opening square paper bags, before the end of the year 1903?

Same objections.

A. I should judge at least two-thirds of the one hundred and two machines, will be installed by the end of the year 1903.

R-R-D-Q. 195. About how soon after the end of the year 1903, will the last of those one hundred and two machines be installed and put into operation, if the Continental Paper Bag Company is not interfered with by any injunction in the meantime?

Same objections.

A. Within six months after the end of 1903.

Re-re-cross examination:

R-R-X-Q. 196. On what do you base your answer to question 192?

A. I based the answer to that question upon my experience in purchasing paper bags from the Union Bag & Paper Company, or from one of its distributing agents.

R-R-X-Q. 197. Well, from which one?

A. If I remember correctly, from D. S. Walton & Co., New York City; or from one of the sub-agents of D. S. Walton & Co.; Osborn & Wilson, New York City. Besides there is no secret about the price list of the Union Bag & Paper Company, because it is public property after they are issued.

R-R-X-Q. 198. When was the purchase made on which

you base that answer? What was its amount? And what were the styles and sizes of bags included?

A. I don't remember the purchase; as regarding the amount; nor its date; nor the sizes of bags. Nothing, except the styles of said bags. But the Elsas Paper Company, (of which I was President at the time,) if I remember correctly, made many purchases of this kind.

R-R-X-Q. 199. Have you any written records in respect to this alleged increase in price, as set forth in answer to R-R-D-Q. 192?

A. I don't know.

R-R-X-Q. 200. You did not make that answer in view of any actual record, did you?

A. I made the answer from my recollection entirely; which is undoubtedly correct.

Last sentence objected to as volunteered.

R-R-R-D-Q. 201. How many years, if at all, were you or was the Elsas Paper Company, under your management, engaged in the business of buying and selling self-opening square paper bags, prior to 1899, when you organized the Continental Paper Bag Company?

A. I should judge for ten years, prior to that year, I purchased self-opening square bags for the Elsas Paper Company; and I believe two or three years before 1889, I purchased self-opening square paper bags for the firm, of which I was a member; namely: Elsas, Kellar & Company.

R-R-R-D-Q. 202. Did you, or did the Elsas Paper Company continue to buy and sell self-opening square paper bags, or did any other concern, with which you were connected, so continue, after you organized the Continental Paper Bag Company, and before that company was able to manufacture such paper bags itself?

Objected to as immaterial.

A. The Elsas Paper Company, and also the Continental Paper Bag Company, I believe, continued to buy and sell

self-opening square bags from the Union Bag & Paper Company or its agents, before the Continental Paper Bag Company was able to manufacture such paper bags itself.

R-R-R-D-Q. 203. You stated in reply to X-Q. 51, that you did not remember the names of the parties who organized the Continental Paper Bag Company. But in reply to X-Q. 52, you stated that you yourself, with the assistance of Mr. Chisholm and Mr. Pettingill, secured subscriptions for the stock of that Company. Now please to state what distinction you had in view between securing subscriptions for the stock of the Company, on the one hand, and organizing the Company on the other hand.

A. What I meant to imply was this: The organization of the Continental Paper Bag Company was completed in the City of Portland, State of Maine, through our counsellors, Messrs. Symonds, Snow & Cook, and this firm of attorneys arranged all the details of the organization; and the organizers, to conform with the law, were men in their employ, or some of their friends, whose names I do not remember.

Deposition closed.

HERMAN ELSAS.

Complainant's Exhibit, Walker Opinion.

STATEMENT AND OPINION.

Relevant to

SIX CERTAIN PAPER BAG MACHINES OF EDWARD E. CLAUSSEN, OF HARTFORD, CONN.

The grocers' paper bags, which are known to commerce, are of four kinds, namely: 1. The flat bag. 2. The satchel bottom bag. 3. The Crowell bag. 4. The self-opening

1408

square bag. The first two of these kinds of bags have been made by hand and by machinery in the United States, throughout the last quarter of a century, and more. The third kind was introduced into the art in letters patent No. 123,811, of February 20, 1872, to Luther C. Crowell. The fourth kind was first shown in any patent, in letters patent No. 227,350 of May 11, 1880, to Mark L. Deering. The Deering patent was reissued April 11, 1882, as No. 10,083; and the invalidity of that reissue was established by the United States Circuit Court of Appeals for the Second Circuit, in the case of The Union Paper Bag Machine Company *v.* Waterbury, in 1895, 70 Fed. Rep., 240.

All six of the Claussen machines are intended and adapted to manufacture the self-opening square paper bag only. The first patent ever granted for any machine, intended or adapted to manufacture that kind of paper bag is No. 242,661 to Leinbach, Wolle & Brunner, June 7, 1881. Any machine which can make that kind of a paper bag, must be far more complicated and ingenious, than any machine needs to be to manufacture either of the first three kinds of bags; and must be invented and constructed on some materially different plan, from any machine for constructing any other kind of paper bag, than the self-opening square bag. For this reason a thorough investigation of the validity of the patents to be granted upon the six Claussen machines, or either of them, does not need to extend further back than the Leinbach, Wolle & Brunner patent of June 7, 1881. But a thorough investigation of the question whether either of the Claussen machines, when constructed, sold, or used after the year 1896, would infringe any claim of any living patent must include an examination of all paper bag machine patents, which have been granted in the United States, since 1879; because, otherwise the possibility would remain that some particular claim or claims in a patent on a machine, for making some one or other of

the four kinds of paper bags, would be infringed by some part of one or other of the Claussen machines.

I have, therefore, examined the drawings and specifications of the six applications for United States patents upon the six Claussen machines respectively, and have also examined all the paper bag machine patents, which have been granted in the United States since 1879, a list of which is attached hereto, and which are more than two hundred in number. That examination has been made during four days of the present month; but it would necessarily have occupied an entire month at least, if I had not been acquainted with paper bag machines and paper bag machine patents before. But I have been examining such machines and such patents to a large extent, ever since early in 1883; and I have prepared the specifications of many of the paper bag machine patents which have been granted since that time, and have been engaged in litigation where many other of those paper bag machine patents have been involved, so that four days of steady application to the subject has enabled me to arrive at satisfactory conclusions, relevant to all questions of validity and infringement, which are involved in the six Claussen machines, or either of them. I will therefore state what conclusions I have arrived at, relevant to those machines, respectively.

SERIAL NO. 599,609.

This application was filed July 18, 1896, and was allowed October, 29, 1896; and the patent thereon will issue December 29, 1896.

The specific form of self-opening square paper bag, which the machine is adapted to manufacture, is shown in Figure 17 of the drawings of the application, and differs in respect of the form of certain folds in the bottom, from all previous paper bags.

A complete machine to manufacture any self-opening square paper bag must consist of three rand divisions,

namely: 1. The tucked tube forming division. 2. The "diamond" fold-forming division. 3. The final folding-flap division.

This Claussen machine does not include the first of these grand divisions, and Mr. Claussen properly relies upon supplying it, by following the expired Benner patent No. 138,844 of May 13, 1873, in connection with those well known or easily contrived and unpatented and unpatentable improvements upon the Benner patent, which equally with that patent are now open to the public.

The novelty in this machine resides in its devices and combinations of devices which form the peculiar diamond fold shown in Figure 16 of the drawings of the application. Those devices include the certain Vee-plate, which is marked 82, and is provided with bevel or diagonal edges, and include two oppositely disposed turning fingers, which are adapted to enter the tucks of a paper bag blank, and fold the projecting corners thereof over against those bevel edges, and press and hold them down on top of the Vee-plate, and include a tucker plate mounted to the Vee-plate, and adapted to define the transverse folding line across the blank. Various combinations of those devices are well expressed in ten claims which have been allowed by the Patent Office. No claim in the application was at any time rejected or limited by the Patent Office on account of any prior patent or invention; and I find that the combinations of devices covered by the ten allowed claims, respectively, are all new in construction and mode of operation, being decidedly different from every combination shown in any existing patent of the United States. There is, therefore, no reason for not affirming the validity of the patent, which will be issued on this application December 29, 1896.

I also find no infringement by anything, or any combination of things shown in the drawings of this applica-

tion, of any patent of the United States, granted since 1879, and therefore still unexpired.

SERIAL NO. 600,861.

This application was filed July 29, 1896, with twenty-one claims. The first Patent Office action was taken August 31, 1896, and consisted in objecting to claims 1, 2, 3, 4, 5, 6, 7, 8, 9, 13, 14, 15, 16, 17, for informality, and in rejecting claim 18 upon the patent to Arkell No. 122,029 of December 26, 1871; and in saying that claims 10, 11, 12, 19, 20, and 21 would be allowed, as the Patent Office was then advised. Thereupon the applicant amended his application, by cancelling claim 18, and by changing claims 1, 2, 3, 4, 5, 6, 7, 13, 14, 15, 16 and 17 so as to make them satisfactory to the Patent Office in point of formality; and at the same time, the applicant convinced the Patent Office by argument that claims 8 and 9 were not informal. The next Patent Office action occurred November 7, 1896, and consisted in rejecting claims 1 to 5 inclusive, upon the patent to Lorenz and Honiss No. 337,966 of March 16, 1886, and in tacitly approving the other fifteen claims then in the case. The applicant has not yet taken any action in response to the Patent Office action of November 7, 1896.

Claim 18, which was rejected on the patent to Arkell, was an unimportant claim, the presence of which in the prospective patent would not have appreciably increased its value.

This Claussen machine is a particularly good one, because it is much smaller and simpler, and less expensive than any prior machine for making self-opening square paper bags; and though the quality and speed of its work can only be determined by building and using a full-sized machine, I see no theoretical error or imperfection in the specifications or drawings, upon which to base any fear that the machine will not be a success, and work well according to its plan and programme. Moreover, it is

planned to make the regular self-opening square bag without those changes in the folds of the bottom, which characterize the machine of Serial No. 599,609; and I think the regular form of self-opening square bag will always be preferred by the public, to the form made by the last mentioned machine. On the whole, I think the Claussen machine of Serial No. 600,861 is decidedly the best of the six Claussen machines to which this opinion and statement refer.

The Lorenz & Honiss patent, No. 337,966 of March 16, 1886, upon which the Patent Office rejected the first five claims of this Claussen application, was solicited by me, and I personally prepared its specification and claims. That patent is confined to the second grand division of a paper bag machine, and the plan and mode of operation of its mechanism is obviously and widely different from the plan and mode of operation of the mechanism for performing the same function, in this Claussen machine. But the first five claims of the Claussen application are all confined to small parts of the territory occupied by the second grand division of the Claussen machine; and those claims are expressed in general terms which fit certain parts and combinations in the Lorenz and Honiss patent, fairly well; and therefore, those claims were rightly rejected by the Patent Office. However, the remaining fifteen claims which have been tacitly allowed by the Patent Office, are sufficient, with some amendments, and perhaps some additions, which I would recommend, and which would undoubtedly be allowed, to cover this Claussen machine. As against the present fifteen claims, or as against those claims as thus amended and supplemented the prior patents contain nothing which can be successfully invoked as negativing the validity of those claims, so that the patent which can undoubtedly be obtained upon this Claussen application No. 600,861 will undoubtedly be a valid patent; for no other prior patent, than the Lorenz and

Honiss patent No. 337,966, is near enough like this Claussen machine, to present any debatable question of anticipation.

And no infringement of any patent, by this Claussen machine, can be claimed with any plausibility; except that some persons might think that this Claussen machine contains infringement of claims 2 and 4 of the Lorenz and Honiss patent No. 333,647 of January 5, 1886, and of claim 4 of the Lorenz and Honiss patent No. 337,966 of March 16, 1886. After giving mature consideration to those points, I have arrived at the conclusion that this Claussen machine does not infringe either of those claims. It does not infringe claim 2 of patent No. 333,647; because its tucker plate 75; its side nipper 83; and its side clip 67, are not constructed and arranged, and do not operate substantially like the presser plate 34; the turning plate 33; and the fixed blade 31, of that claim. And this machine does not infringe claim 4 of that patent; because its tucker plate 75, and its side nipper 83, do not operate together to clasp the upper fold of the tuck of the paper tubing and turn it over upon itself substantially like the presser plate 34, and the turning blade 33 of that claim; and because a construction of that claim which would be broad enough to cover the Claussen tucker plate 75, and side nipper 83, would be broad enough to cover any pair of pinchers, which might be used to clasp paper between its members, and turn that paper over upon itself, or under below itself. And this Claussen machine does not infringe claim 4 of the Lorenz and Honiss patent No. 337,966, because its carrier 56 is not an equivalent of the presser plate 47, of that patent. It is not such equivalent, because it does not perform the same function, in substantially the same way. That function is truly said in the Lorenz and Honiss patent to consist in clasping the paper tubing between that presser plate 47 and the rear edge of the upper presser plate 67, and in passively allowing the grip-

pers 61, 62 and 63 to clasp the lower part of the paper tubing down upon the upper side of that presser plate 47. In the Claussen machine, the carrier 56 passively allows its front clip 61, and its side clips 67 to clasp the lower part of the paper tubing down upon the upper side of that carrier; but that carrier does not clasp the paper tubing between its upper side and the rear edge of any upper presser plate. On the contrary, the Claussen specification truly states that the supplemental carrier swings away from the Claussen tucker plate 75, which tucker plate corresponds less remotely than anything else in the Claussen machine with the upper presser plate of the Lorenz and Honiss patent. It is true that the lower edge of the Claussen tucker plate 75, thereupon follows the departing carrier 56, but it does not appear to follow fast or far enough to quite catch up; and it does not appear that the paper tubing is ever clasped between the upper side of the Claussen carrier 56, and the lower edge of the Claussen tucker plate 75. Moreover, the mode of operation of the Lorenz and Honiss presser plate 47 requires that it should be pivoted, and it is in fact pivoted some distance to the rear of the rear edge of the Lorenz and Honiss presser plate 67; whereas the mode of operation of the Claussen carrier 56 requires it to be pivoted, and it is in fact pivoted a still greater distance forward of both edges of the Claussen tucker plate 75; and therefore the Claussen carrier does not oscillate on a pivot substantially as the Lorenz and Honiss presser plate 47 is described as oscillating and must oscillate. These differences are enough to acquit the Claussen machine of any infringement of claim 4 of this Lorenz and Honiss patent No. 337,966; because that patent, is far from being a primary one, and must therefore be limited to the particular mechanism which it describes. Duff *vs.* Pump Co., 107 U. S., 639, 1882; Knapp *vs.* Morss, 150 U S., 230, 1893; Boyd *vs.* Janesville Hay Tool Co. 158 U. S., 267, 1895; McCarty *vs.*

Lehigh Valley R. R. Co., 160 U. S., 120, 1895; Dashiel *vs.* Grosvenor, 162 U. S., 432, 1896. A primary invention is one which performs a function never performed by any earlier invention. Norton *vs.* Jensen, 49 Fed. Rep., 862, 1892; National Cash Register Co. *vs.* American Cash Register Co., 53 Fed. Rep., 372, 1892; Boston Lasting Machine Co. *vs.* Woodward, 53 Fed. Rep. 481, 1893; Celluloid Mfg. Co. *vs.* Arlington Mfg. Co., 44 Fed. Rep,. 86, 1890. A secondary invention is one which performs a function previously performed by some earlier invention, Butz-Thermo Electric Co. *vs.* Electric Co, 36 Fed. Rep., 192, 1888. And primary inventions are entitled to a much broader range of equivalents than secondary inventions are. Miller *vs.* Eagle Co., 151 U. S., 207, 1894; Dederick *vs.* Seigmund, 51. Fed. Rep., 235, 1892. This Lorenz and Honiss patent No. 337,966, is far from being a primary patent; because its function of forming a diamond fold in one end of a tucked paper tube, is the same function that was performed by each of several earlier patents. Those earlier patents are No. 242,661 of June 7, 1881 to Leinbach, Wolle & Brunner; No. 327,280 of September 29, 1885 to Leinbach, Wolle & Brunner; No. 331,722 of December 1, 1885 to Lorenz and Honis; and No. 333,647 of January 5, 1886, to Lorenz and Honis; and also Nos. 337,964, and 337,965 of March 16, 1886, which last two, though they were granted on the same day with No, 337,966, were both applied for nearly four months before No. 337,966, was applied for, and are therefore both earlier patents in the eye of the law. Pope Mfg. Co. *vs.* Gormully Mfg. Co., 144 U. S., 244, 1892. Moreover the subject matter of claim 4 of the Lorenz and Honiss patent No. 337,966 can be differentiated from what is shown in several of the above mentioned prior patents, performing the same function, only by the fact that the presser plate of that claim down upon which the grippers of that claim press the tucked paper tubing, oscil-

lates vertically upon a horizontal pivot, through a few degrees, instead of always occupying the same horizontal plane. That oscillation has no function except to permit the projection of the forward end of the paper tube between it and the lower edge of the upper presser plate, 67, and the subsequent clasping of the paper tube between the upper side of that presser plate, 47, and that upper presser plate, 67. Quite unlike this, the oscillation of the carrier, 56, of the Claussen machine performs the active function of drawing the lower part of the opening end of the paper tube downward from its otherwise horizontal path of progression, and thus constitutes an active instrumentality in opening out the forward end of the paper tube into the diamond form at a time when the presser plate, 47, of the Lorenz and Honiss patent is not oscillating at all and is merely passive, while the work is all being done by the upper presser plate, 67.

For these reasons I conclude that this Claussen machine does not infringe claim 4 of the Lorenz and Honiss patent, No. 337,966; and it surely does not infringe any other claim of that patent. Having found that that machine does not infringe any claim of any existing patent, I can think of no reason to fear that any manufacture, sale or use of such machines would ever be interfered with when being conducted under the patent, which will undoubtedly soon be granted upon this Claussen application, serial No. 600,861.

SERIAL No. 606,348.

This application was filed September 19, 1896, with seven claims. The first Patent Office action was had October 20, 1896. That action consisted in objecting to all the claims, for informality, and in rejecting all the claims except the seventh, upon the patent to Liddell, No. 564,288, of July 21, 1896.

This Claussen machine is entitled to the second position

in point of merit among the six Claussen machines, because it is planned to make the regular self opening square bag without those changes in the folds in the bottom which characterize several of the others, and because, next to the machine of serial No. 600,861, it is contrived on the simplest and truest lines. I see no theoretical reason for any fear that this machine will not be a success mechanically.

The plan of this machine is substantially unlike that of any prior patent, except the patents to Liddell, No. 558,969 of April 28, 1896, and No. 564,288 of July 21, 1896. And this machine is unlike those patents to so considerable an extent, as to fully justify the issuance of a valid and valuable patent thereon. I have no doubt that such a patent will be granted, upon such amended claims as will satisfy the Patent Office, and also secure the just rights of the inventor Claussen. After such a patent is granted, and whenever a machine is made, sold or used, in accordance therewith; it is possible that the owner of the Liddell patents will contend that machine to be an infringement of one or both of those patents. And there will be some force in such a contention as to some of those claims; though in my opinion, no such contention can ultimately prevail in court. If either Liddell patent were a primary one, and therefore entitled to a broad range of equivalents; this Claussen machine would perhaps be held to infringe it; but both Liddell patents occupy such late places in the art, and have been preceded by so many patents and machines performing the same function, that the court will limit them both very closely to the particular mechanisms which they respectively describe and delineate. This Claussen machine, while having some similarity to some of those mechanisms, differs therefrom quite enough to avert infringement of any of the Liddell claims, as those claims must be construed in the light of the very extensive prior art. That prior art includes many

prior patents, among which may be mentioned No. 444,728, of January 13, 1891 to Lorenz; No. 444,729 of January 13, 1891 to Lorenz and Claussen; No. 459,445 of September 15, 1891, to Lorenz and Claussen; and No. 534,512 of February 19, 1895, to Lorenz and Claussen, as well as the long line beginning with the Leinbach, Wolle & Brunner patent No. 242,661 of June 7, 1881, and partly delineated in the above review of the position in the art of the Lorenz and Honiss patent No. 337,966, of March 16, 1886.

For these reasons I have concluded that this Claussen machine does not infringe either of the two Liddell patents; and it does not, in my judgment, infringe any other patent of the United States, which is now in living existence.

SERIAL NO. 510,162.

This application was filed May 5, 1894, and was finally allowed August 13, 1896, with four claims. Each of those claims calls, among other things, for a hollow plate having one perforated wall, and adapted to vibrate upon bearings, located upon a line with, or parallel with the line upon which a ply of a paper bag blank is to be folded over by that plate; and calls also for pneumatic mechanism, to draw the ply to be folded, to the perforated side of the plate, and to carry it therewith. But the fact is, that the suction produced by the pneumatic mechanism is not sufficient to perform that function, without the assistance of mechanical devices, not provided for in the specification, or shown in the drawings; and therefore this Claussen machine will not work, without some addition which is not provided for in the application. Moreover the first two allowed claims ought, in my judgment, to have been rejected upon letters patent No. 519,348, of May 8, 1894, to Purvis, which patent was applied for July 23, 1892, and undoubtedly shows substantially what is called for by those two claims. And I also think, that the last two of

the allowed claims ought to have been rejected on the same patent to Purvis, in connection with the patent to Stilwell No. 407,794, granted July 13, 1889; because those claims call only for using the travelling folding bed of Stilwell, and its appurtenances, in connection with the hollow plate of Purvis, and its appurtenances; and because the bringing together into one machine of those contrivances from two machines, did not, in my judgment, amount to invention. And the case against the validity of the patent to be granted on the four allowed claims of this Claussen application, would be strengthened still more, by the patent to Murchie No. 540,556, of June 4, 1895; and on the whole, I conclude that that patent, when granted, will be void.

But I think that this Claussen machine does not infringe the said patent to Purvis, nor the said patent to Murchie; because all the relevant claims of those patents, with one exception, are limited to the combination of suction boxes, whereas the Claussen machine has but one; and because that exception is claim 12 of the patent to Murchie, which though it calls for but one suction box, calls also for other devices, which the machine of Claussen does not have.

SERIAL No. 599,791.

This application was filed July 20, 1896, with sixteen claims. The first Patent Office action occurred August 18, 1896; and it consisted in rejecting eight claims on three Purvis patents; No. 519,348 of May 8, 1894, No. 519,349 of May 8, 1894, No. 530,650 of December 11, 1894, and one patent to Murchie, No. 540,556 of June 4, 1895; and in objecting to three claims, because not clearly illustrated in the drawings; and in saying that five claims might be allowed as at present advised. The applicant amended the application, September 29, 1896; and the second Patent Office action occurred November 7, 1896, and consisted in again rejecting the same eight claims on the same patents to Purvis and Murchie; and in reject-

ing claim 6, for want of utility; and in rejecting claim 8 upon the same patents to Purvis and Murchie; and in adding claim 9 to the five which were tacitly allowed in the first action. The applicant has taken no further action in the case.

The rejection of the nine claims, Nos. 1, 2, 3, 4, 5, 8, 11, 12, and 13, upon the patents to Purvis and Murchie, was right; and the rejection of claim 6 was also right. Claim 7, though tacitly allowed by the Patent Office, is in my opinion, void for want of invention; because it is differentiated from the patents to Purvis and Murchie, only by having a pair of clips mounted upon the opposite edges of the section box, and the suction box having also mounted thereon, a shaft and cams for simultaneously operating the clips; and because, in the light of numerous prior patents, it did not require invention to mount such shaft, cams, and clips upon such suction box. Claim 9 covers a distinct improvement upon both Purvis and Murchie; but a machine constructed with what is called for by claim 9 would therein infringe both Purvis and Murchie.

Claim 10 refers to a combination, the oscillating member of which may, or may not, be a suction box; and therefore that claim unlike the other allowed claims of this application, does not necessarily refer to a pneumatic paper bag machine. The subject matter of the claim is of minor importance; and I am inclined to think the claim void, on account of the Lorenz and Honiss patent No. 337,966, which, like it, has an oscillating member with clips mounted thereon, and a clip operating shaft, and so forth, somewhat like what is called for by said claim 10; for I think the differences between that Lorenz and Honiss patent, and the combination of claim 10, are all within the reach of mechanical skill, where that skill is instructed in the art of paper bag machinery.

The most important claims allowed in this case are Nos. 14, 15, and 16. Neither of these claims is anticipated

by any prior patent; because they call for combinations which are inventive developments of the suction box combinations of Purvis and Murchie. But a machine containing the combination of either of these claims would infringe the Purvis patent No. 519,348, of May 8, 1894, and the Murchie patent No. 540,556 of June 4, 1895.

CASE NO. 40.

The application papers in this case have been prepared, but have not been filed in the Patent Office. The claims are eleven in number. The machine is adapted to manufacture a self-opening square paper bag, having the peculiar folds in the bottom, which also characterize the bag manufactured by the machine of serial No. 599,609, and which bottom therefore differs in that respect from the regular self-opening square paper bags, such as those manufactured by the four other Claussen machines; and this machine is in some respects similar to that of serial No. 600,861; while it contains some points of novelty, as compared with that machine, and with the others of the six Claussen machines, and with all prior patents. It is not probable that all of the eleven claims will be allowed by the Patent Office, without diminution or change; but there is no reason to doubt that a valid patent with several good claims can be obtained on this machine.

Non-infringement by this machine of the Lorenz and Honiss patent No. 333,647 of January 5, 1886, and of the Lorenz and Honiss patent No. 337,966 of March 16, 1886, can confidently be affirmed for the same reasons that non-infringement of those patents has already been shown, in respect of the machine of serial No. 600,861. This machine contains a pair of folding blades provided with pinchers, and mounted diagonally to the transverse folding line of the bag blank, and oscillating on that diagonal line, so as to turn over upon itself each of the upper forward corners of the tucked paper tube. No such folding

blades and pinchers thus located and thus operating, are in either of the other Claussen machines, or are shown in any existing patent; and therefore there is no reason to fear that they infringe any claim of any existing patent. Plenty of prior patents show pinchers for clasping and turning paper bag blanks on various lines; but none for clasping and turning a paper bag blank on the diagonal lines upon which these Claussen folding blades and pinchers work. Inasmuch as folding blades and pinchers have been used in paper bag machines since long before 1880 in numerous relations and places, there can be no valid claim in any living patent for any pair of folding blades and pinchers, regardless of particular location and function; and therefore no valid claim in any prior patent which can cover and suppress these folding blades and pinchers of Claussen, is to be found,

And I also find no infringement by anything, or by any combination of things, shown in the drawings of this application, of any patent of the United States, granted since 1879, and therefore still unexpired.

HARTFORD, CONNECTICUT, December 24, 1896.

ALBERT H. WALKER.

LIST OF UNITED STATES PAPER BAG MACHINE PATENTS, FOR THE YEARS 1880–1896, INCLUSIVE.

Leinbach, Wolle & Brunner	242,661.	June 7, 1881.
"	269,434.	December 19, 1882.
"	327,280.	September 29, 1885.
Lorenz and Honiss	331,721.	December 1, 1885.
"	331,722.	December 1, 1885.
"	331,723.	December 1, 1885.
"	333,647.	January 5, 1886.
"	337,964.	March 16, 1886.
"	337,965.	March 16, 1886.

Lorenz and Honiss	337,966.	March 16, 1886.
"	361,951.	April 26, 1887.
"	374,309.	December 6, 1887.
"	377,314.	January 31, 1888.
"	380,392.	April 3, 1888.
"	385,064.	June 26, 1888.
"	410,842.	September 10, 1889.
"	559,140.	April 28, 1896.
Lorenz	333,646.	January 5, 1886.
"	410,843.	September 10, 1889.
"	418,201.	December 31, 1889.
"	444,728.	January 13, 1891.
"	559,139.	April 28, 1896.
Honiss	329,561.	November 3, 1885.
"	365,815.	July 5, 1887.
"	374,361.	December 6, 1887.
Lorenz and Claussen	410,841.	September 10, 1889.
"	444,729.	January 13, 1891.
"	459,445.	September 15, 1891.
"	534,512.	February 19, 1895.
"	553,652.	January, 28, 1896.
"	573,277.	December 15, 1896.
"	573,278.	December 15, 1896.
Claussen	374,345.	December 6, 1887.
"	444,727.	January, 13, 1891.
"	496,860.	May 9, 1893.
"	502,847.	August 8, 1893.
Claussen and Mortson	411,544.	September 24,1889.
Stilwell	255,204.	March 21, 1882..
"	263,440.	August 29, 1882.
"	279,505.	June 12, 1883.
"	370,099.	September 20, 1887.
"	407,794.	July 30, 1889.
"	410,122.	August 27, 1889.
"	410,123.	August 27, 1889.
"	410,124.	August 27, 1889.

Stilwell	410,125.	August 27, 1889.
"	410,126.	August 27, 1889.
"	413,634.	October 22, 1889.
"	414,264.	November 5, 1889.
"	417,346.	December 17, 1889.
"	473,977.	May 3, 1892.
"	508,059.	November 7, 1893.
"	508,060.	November 7, 1893.
"	508,061.	November 7, 1893.
"	511,171.	December 19, 1893.
Arkell	425,197.	April 8, 1890.
"	447,065.	February 24, 1891.
Allison	298,719.	May 20, 1884.
"	299,097.	May 27, 1884.
Annan	233,591.	October 26, 1880.
"	276,744.	May 1, 1883.
Appel	228,162.	June 1, 1880.
"	231,642.	August 31, 1880.
"	241,114.	May 10, 1881.
"	241,113.	May 10, 1881.
"	252,412.	January 17, 1882.
"	332,631.	December 15, 1885.
"	340,081.	April 20, 1886.
"	387,573.	August 7, 1888.
Adams	279,114.	June 12, 1883.
Benner	382,682.	May 15, 1888.
"	391,936.	October 30, 1888.
"	397,772.	February 12, 1889.
Burdick	407,813.	July 30, 1889.
"	407,814.	July 30, 1889.
Baker	373,876.	November 25, 1887.
"	484,281.	October 11, 1892.
Baron & Bibby	460,907.	October 6, 1891.
Belcher	356,441.	January 25, 1887.
Bennett	225,320.	March 9, 1880.
Byer	251,402.	December 27, 1881.

Boyer	477,402.	June 21, 1892.
Boynton	301,084.	July 1, 1884.
Bredenberg	429,007.	May 27, 1890.
Chandler	228,312.	June 1, 1880.
"	251,997.	January 3, 1882.
"	256,123.	April 11, 1882.
"	267,774.	November 21, 1882.
"	285,392.	September 25, 1883.
Clarke	430,728.	June 24, 1890.
Cross	220,810.	October 21, 1879.
"	225,509.	March 16, 1880.
"	229,970.	July 13, 1880.
"	232,945.	October 5, 1880.
"	232,947.	October 5, 1880.
"	232,946.	October 5, 1880.
"	239,455.	March 29, 1881.
"	239,456.	March 29, 1881.
"	239,457.	March 29, 1881.
"	239,458.	March 29, 1881.
"	239,459.	March 29, 1881.
"	240,972.	May 3, 1881.
"	243,857.	July 5, 1881.
"	243,858.	July 5, 1881.
"	244,860.	July 26, 1881.
"	244,861.	July 26, 1881.
"	246,373.	August 30, 1881.
"	254,928.	March 14, 1882.
"	325,059.	August 25, 1885.
"	336,474.	February 16, 1886.
"	363,729.	May 24, 1887.
Crowell	510,410.	December 12, 1893.
Coates & Bissicks	282,166.	July 31, 1883.
Chadsey	328,459.	October 20, 1885.
"	352,118.	November 9, 1886.
Carter	509,874.	December 5, 1893.
Christ	543,571.	July 30, 1895.

Corkhill	361,746.	April 26, 1887.
Cotton & Hewes	312,257.	February 17, 1885.
Connors	534,313.	February 19, 1895.
Davidson	234,544.	November 16, 1880.
Dangoise	226,287.	April 6, 1880.
Dean & Robie	399,846.	March 19, 1889.
Denoyer	515,199.	February 20, 1894.
Ehst & Fiester	467,553.	January 26, 1892.
Fiala	439,058.	October 21, 1890.
Getten	405,308.	June 18, 1889.
"	481,650.	August 30, 1892.
"	482,170.	September 6, 1892.
"	485,006.	October 25, 1892.
Glover	9,428.	October 19, 1880.
Harmon	267,197.	November 7, 1882.
House	236,951.	January 25, 1881.
"	237,111.	February 1, 1881.
"	283,890.	August 28, 1883.
Van Hoesen	269,352.	December 19, 1882.
Harris & Fletcher	248,739.	October 25, 1881.
Jehle	329,173.	October 27, 1885.
Kelliher	439,842.	November 4, 1890.
"	439,843.	November 4, 1890.
Kline	458,559.	September 1, 1891.
Liddell	370,548.	September 27, 1887.
"	455,407.	July 7, 1891.
"	487,225.	November 29, 1892.
"	491,573.	February 14, 1893.
"	492,498.	February 28, 1893.
"	535,591.	March 12, 1895.
"	558,969.	April 28, 1896.
"	564,288.	July 21, 1896.
Murchie	540,556.	June 4, 1895.
Mortson	426,843.	April 29, 1890.
Millis	513,519.	January 30, 1894.
McCreedy	458,914.	September 1, 1891.

Metzenaur	434,939.	August 26, 1890.
McCullough	255,316.	March 21, 1882.
"	264,180.	September 12, 1882.
McCulla	407,300.	July 16, 1889.
Onderdonk	333,538.	January 5, 1886.
Patterson	234,925.	November 30, 1880.
"	426,852.	April 29, 1890.
"	446,839.	February 17, 1891.
"	450,710.	April 21, 1891.
Purvis	293,353.	February 12, 1884.
"	420,099.	January 28, 1890.
"	430,684.	June 24, 1890.
"	434,461.	August 19, 1890.
"	435,524.	September 2, 1890.
"	460,093.	September 22, 1891.
"	519,348.	May 8, 1894.
"	519,349.	May 8, 1894.
"	530,650.	December 11, 1894.
Pettee	225,163.	March 2, 1880.
"	542,447.	July 9, 1895.
Porter	398,278.	February 19, 1889.
"	413,458.	October 22, 1889.
Perry	304,750.	September 9, 1884.
Planche	239,543.	March 29, 1881.
Ruthenburg	226,423.	April 13, 1880.
"	236,633.	January 11, 1881.
Stocking	223,960.	January 27, 1880.
"	223,961.	January 27, 1880.
"	226,127.	March 30, 1880.
"	241,830.	May 24, 1881.
"	245,575.	August 9, 1881.
"	259,280.	June 6, 1882.
"	279,109.	June 5, 1883.
Schmidt	378,526.	February 28, 1888.
"	378,851.	February 28, 1888.

Sawyer	271,922.	February 6, 1883.
"	326,592.	September 22, 1885.
Schenck	465,211.	December 15, 1891.
Sabold	493,524.	March 14, 1893.
Stevens	461,287.	October 13, 1891.
"	467,776.	January 26, 1892.
"	502,784.	August 8, 1893.
Stanley	225,887.	March, 23, 1880.
"	503,810.	August 22, 1893.
"	432,742.	July 22, 1890.
"	253,441.	February 7, 1882.
"	568,500.	September 29, 1896.
Taylor	439,703.	November 4, 1890.
West	461,599.	October 20, 1891.
"	487,862.	December 13, 1892.
"	324,620.	August 18, 1885.
Weidenbusch	424,742.	April 1, 1890.

Elsas Exhibit, No. 1.

Dec. 24th 1896.

COPY OF STATEMENT AND OPINION, relevant to Paper Bag Machine of Edward E. Claussen of Hartford, so given by Albert H. Walker of Hartford, Conn.

SERIAL #600,861. $\frac{L.\ P.}{Now}$ *Feby 8th 1898 598,497.*

(Allowed July 11, 1897, will issue some time in January 1898.)

This application was filed July 29, 1896, with twenty-one claims. The first Patent Office action was taken August 31, 1896, and consisted in objecting to claims 1, 2, 3, 4, 5, 6, 7, 8, 9, 13, 14, 15, 16, 17, for informality, and in rejecting claim 18 upon the patent to Arkell No. 122,029,

of December 26, 1871; and in saying that claims 10, 11, 12, 19, 20 and 21 would be allowed, as the Patent Office was then advised. Thereupon the applicant amended his application, by cancelling claim 18, and by changing claims 1, 2, 3, 4, 5, 6, 7, 13, 14, 15, 16 and 17 so as to make them satisfactory to the Patent Office in point of formality; and at the same time, the applicant convinced the Patent Office by argument that claims 8 and 9 were not informal. The next Patent Office action occurred November 7, 1896, and consisted in rejecting claims 1 to 5 inclusive, upon the patent to Lorenz & Honiss No. 337,966, of March 16, 1886, and in tacitly approving the other fifteen claims then in the case. The applicant has not yet taken any action in response to the Patent Office action of November 7, 1896.

Claim 18, which was rejected on the patent to Arkell was an unimportant claim, the presence of which in the prospective patent, would not have appreciably increased its value.

This Claussen machine is a particularly good one, because it is much smaller and simpler, and less expensive than any prior machine for making self-opening square paper bags; and though the quality and speed of its work can only be determined by building and using a full-sized machine, I see no theoretical error or imperfection in the specifications or drawings, upon which to base any fear that the machine will not be a success, and work well according to its plan and programme. Moreover, it is planned to make the regular self-opening square bag without those changes in the folds of the bottom, which characterize the machine of Serial No. 599,609; and I think the regular form of self-opening square bag will always be preferred by the public, to the form made by the last-mentioned machine. On the whole, I think the Claussen machine of Serial No. 600,861, is decidedly the

best of the six Claussen machines to which this opinion and statement refer.

The Lorenz & Honiss patent, No. 337,966, of March 16, 1886, upon which the Patent Office rejected the first five claims of this Claussen application, was solicited by me, and I personally prepared its specification and claims. That patent is confined to the second grand division of a paper bag machine, and the plan and mode of operation of its mechanism is obviously and widely different from the plan and mode of operation of the mechanism for performing the same function, in this Claussen machine. But the first five claims of the Claussen application are all confined to small parts of the territory occupied by the second grand division of the Claussen machine ; and those claims are expressed in general terms which fit certain parts and combinations in the Lorenz & Honiss patent, fairly well ; and therefore, those claims were rightly rejected by the Patent Office. However, the remaining fifteen claims which have been tacitly allowed by the Patent Office, are sufficient, with some amendments, and perhaps some additions, which I would recommend, and which would undoubtedly be allowed, to cover this Claussen machine. As against the present fifteen claims, or as against those claims as thus amended and supplemented, the prior patents contain nothing which can be successfully invoked as negativing the validity of those claims, so that the patent which can undoubtedly be obtained upon this Claussen application No. 600,861, will undoubtedly be a valid patent ; for no other prior patent than the Lorenz & Honiss patent, No. 337,966, is near enough like this Claussen machine to present any debatable question of anticipation.

And no infringement of any patent by this Claussen machine can be claimed with any plausibility, except that some persons might think that this Claussen machine contains infringement of claims 2 and 4 of the Lorenz &

Honiss patent, No. 333,647, of January 5, 1886, and of claim 4 of the Lorenz & Honiss patent, No. 337,966, of March 16, 1886. After giving mature consideration to those points, I have arrived at the conclusion that this Claussen machine does not infringe either of those claims. It does not infringe claim 2 of patent No. 333,647, because its tucker plate 75, its side nipper 83, and its side clip 67 are not constructed and arranged, and do not operate substantially like the presser plate 34, the turning blade 33, and the fixed blade 31 of that claim. And this machine does not infringe claim 4 of that patent; because its tucker plate 75, and its side nipper 83, do not operate together to clasp the upper fold of the tuck of the paper tubing and turn it over upon itself substantially like the presser plate 34 and the turning blade 33 of that claim; and because a construction of that claim which would be broad enough to cover the Claussen tucker plate 75 and side nipper 83 would be broad enough to cover any pair of pinchers which might be used to clasp paper between its members, and turn that paper over upon itself or under below itself. And this Claussen machine does not infringe claim 4 of the Lorenz and Honiss patent No. 337,966, because its carrier 56 is not an equivalent of the presser plate 47 of that patent. It is not such equivalent because it does not perform the same function in substantially the same way. That function is truly said in the Lorenz & Honiss patent to consist in clasping the paper tubing between that presser plate 47, and the rear edge of the upper presser plate 67, and in passively allowing the grippers 61, 62 and 63, to clasp the lower part of the paper tubing down upon the upper side of that presser plate 47. In the Claussen machine, the carrier 56 passively allows its front clip 61, and its side clips 67, to clasp the lower part of the paper tubing down upon the upper side of that carrier; but that carrier does not clasp the paper tubing between its upper side and

the rear edge of any upper presser plate. On the contrary, the Claussen specification truly states that the supplemental carrier swings away from the Claussen tucker plate 75, which tucker plate corresponds less remotely than anything else in the Claussen machine with the upper presser plate of the Lorenz & Honiss patent. It is true that the lower edge of the Claussen tucker plate 75 thereupon follows the departing carrier 56, but it does not appear to follow fast or far enough to quite catch up; and it does not appear that the paper tubing is ever clasped between the upper side of the Claussen carrier 56, and the lower edge of the Claussen tucker plate 75. Moreover, the mode of operation of the Lorenz & Honiss presser plate 47, requires that it should be pivoted, and it is in fact pivoted some distance to the rear of the rear edge of the Lorenz & Honiss presser plate 67; whereas the mode of operation of the Claussen carrier 56, requires it to be pivoted, and it is in fact pivoted a still greater distance forward of both edges of the Claussen tucker plate 75; and therefore, the Claussen carrier does not oscillate on a pivot substantially as the Lorenz & Honiss presser plate 47, is described as oscillating, and must oscillate. These differences are enough to acquit the Claussen machine of any infringement of claim 4, of this Lorenz and Honiss patent, No. 337,966, because that patent is far from being a primary one, and must, therefore, be limited to the particular mechanism which it describes. Duff *vs.* Pump Co., 107 U. S., 639, 1882; Knapp *vs.* Morss, 150 U. S., 230, 1893; Boyd *vs.* Janesville Hay Tool Co., 158 U. S., 267, 1895; McCarty *vs.* Lehigh Valley R. R. Co., 160 U. S., 120, 1895; Dashiel *vs.* Grosvenor, 192 U. S., 432, 1896. A primary invention is one which performs a function never performed by any earlier invention. Norton *vs.* Jensen, 49 Fed. Rep., 862, 1892; National Cash Register Co. *vs.* American Cash Register Co., 53 Fed. Rep., 372, 1892; Boston Lasting Machine Co. *vs.* Woodward, 53 Fed. Rep., 481, 1893; Cel-

luloid Mfg. Co. *vs* Arlington Mfg. Co., 44 Fed. Rep., 86, 1890. A secondary invention is one which performs a function previously performed by some earlier invention. Butz-Thermo Electric Co. *vs.* Electric Co., 36 Fed. Rep., 192, 1888. And primary inventions are entitled to a much broader range of equivalents than secondary inventions are. Miller *vs.* Eagle Co., 151 U. S., 207, 1894; Dederick *vs.* Seigmund, 51 Fed. Rep., 235, 1892. This Lorenz and Honiss patent, No. 337,966, is far from being a primary patent, because its function of forming a diamond fold in one end of a tucked paper tube, is the same function that was performed by each of several earlier patents. Those earlier patents are No. 242,661, of June 7, 1881, to Leinbach Wolle & Brunner; No. 327,280, of September 29, 1885, to Leinbach, Wolle & Brunner; No. 331,722, of December 1, 1885, to Lorenz & Honiss; and No. 333,647, of January 5, 1886, to Lorenz and Honiss; and also Nos. 337,964, and 337,965, of March 16, 1886, which last two, though they were granted on the same day with No. 337,966, were both applied for nearly four months before No. 337,966 was applied for, and are, therefore, both earlier patents in the eye of the law. Pope Mfg. Co. *vs.* Gormully Mfg. Co., 144 U. S., 244, 1892. Moreover, the subject matter of claim 4 of the Lorenz and Honiss patent, No. 337,966, can be differentiated from what is shown in several of the above mentioned prior patents, performing the same function, only by the fact that the presser plate of that claim, down upon which the grippers of that claim press the tucked paper tubing, oscillates vertically upon a horizontal pivot, through a few degrees, instead of always occupying the same horizontal plane. That oscillation has no function, except to permit the projection of the forward end of the paper tube between it and the lower edge of the upper presser plate 67, and the subsequent clasping of the paper tube, between the upper side of that

presser plate 47, and that upper presser plate 67. Quite unlike this, the oscillation of the carrier 56, of the Claussen machine, performs the active function of drawing the lower part of the opening end of the paper tube downward from its otherwise horizontal path of progression; and thus constitutes an active instrumentality in opening out the forward end of the paper tube into the diamond form, at a time when the presser plate 47, of the Lorenz and Honiss patent is not oscillating at all, and is merely passive, while the work is all being done by the upper presser plate 67.

For these reasons, I conclude that this Claussen machine does not infringe claim 4, of the Lorenz and Honiss patent, No. 337,966; and it surely does not infringe any other claim of that patent. Having found that that machine does not infringe any claim of any existing patent; I can think of no reason to fear that any manufacture, sale, or use, of such machines, would ever be interfered with, when being conducted under the patent, which will undoubtedly soon be granted upon this Claussen application, serial No. 600,861.

Elsas Exhibit, No. 2.

New York, March 12, 1898.

Elsas Paper Co.
Cor. Hudson & Beach Streets,
New York City.

Gentlemen.—In accordance with your directions and after reading the admirable reports of Albert H. Walker, Esq., which we found to be of material assistance, we have made an independent examination to determine whether or not a certain paper bag machine at your establishment in-

fringes upon any of the claims in any of the following six patents, to wit:

Patent No. 336,647, to Lorenz & Honiss, of January 5, 1886.
Patent No. 337,965, to " " of March 16, 1886.
Patent No. 337,966, to " " of March 16, 1886.
Patent No. 361,951, to " " of April 26, 1887.
Patent No. 407,794, to C. B. Stillwell, of July 30, 1889.
Patent No. 417,346, to C. B. Stillwell, of December17, 1889.

We were given to understand that your machine which is the subject of this report, was made in substantial accordance with the patent No. 598,497, of February 8, 1898, granted to Edward E. Claussen, and find that in many respects this is the fact, while in some respects your machine differs from the mechanism specifically represented in said Claussen patent. The principal differences worthy of mention in this report are:

1st. That the machine in your establishment has now on the tucker plate 75, an end finger, which end finger is not represented in the patent, and which was evidently introduced into the machine because it was found that without it the machine would not be properly operative.

And secondly, that your machine contains a compression arm or block which presses the paper blank after the diamond fold has been formed, definitely against the carrier 56, whereas in the Claussen patent such a movable compression apparatus is not shown, but in lieu thereof a stationary folder plate 93 is shown and described. We are not prepared to say that such a stationary folder plate would be capable of allowing the blank to be delivered in proper form to the creasing and pasting sector 95, but will assume for the purposes of this report, that it was found necessary to substitute for the fixed folder plate 93 the movable pressing arm, which we observe on your machine. Other differences between your machine and the Claussen patent might be recited, but since they are not material

to this investigation, we do not deem it necessary to specify them.

We will now proceed to consider the six patents with which your Claussen machine is to be compared.

The first of these is the Lorenz & Honiss patent No. 333,647. We understand that a machine has never been erected by the owners of said patent in conformity with its provisions. This is an important fact, because it will largely tend to limit its claims to the specific thing shown. A patent which is the basis of an important industry and under which the patented goods or machines have been largely made or used, is in a court of equity entitled to a liberal construction as against those who might be found to use some of the principles of invention disclosed in such patent; but when an invention is simply a paper patent and not followed up by the actual embodiment of the invention in the form of an actuating machine, the equitable consideration just referred to does not arise. On the contrary, a court of equity would regard the owner of such a patent as in a sense a monopolist who seeks to prevent other people from doing what he himself is not willing to do and has not been able to do—a dog in the manger who never receives very favorable consideration. Under this aspect of the position of the patent No. 333,647, we fail to find in any of its claims that which your Claussen machine embodies.

The first claim of patent No. 333,647, seeks to cover one or more pairs of box folding mechanisms attached to and revolving with a cylinder. This naturally means that all the box folding devices, all of the instrumentalities necessary for folding the bottom of the bag into diamond form, are to be found attached to the cylinder, and all those devices or contrivances with which the patentees Lorenz & Honiss intended to bring about the intended aforesaid purpose, are in fact, so attached to said cylinder, and carried around with it. In the Claussen machine, on

the contrary, the essential tucker plate is not attached to the cylinder; and does not travel around with it, nor do any of the clamps accompanying said tucker plate; and consequently the first claim of the patent under consideration is not capable of an interpretation which will cover your device.

The second and third claims of patent No. 333,647, are for combinations embracing, amongst others, a fixed blade 31. Inasmuch as in the Claussen machine as used by you, no blade is found which is fixed in the sense of this Lorenz & Honiss patent, we do not find these two claims to endanger you.

The fourth claim of patent No. 333,647, is in words as follows:

"4. The combination of the turning blade 33 with the presser plate 34, both operating together to clasp the upper fold of the tuck of the paper tubing and to turn it over upon itself, substantially as described."

The specification says that the turning blade 33 and the presser plate 34 are rigidly attached to the inner end of the shaft 32. No such organism can be found in your Claussen machine, but apart from this, we lean to the opinion that the fourth claim in question is invalid, being for an inoperative combination. You will observe that the claim is for a single turning blade and a single presser plate, whereas the machine shown in the Lorenz & Honiss patent requires two separate and distinct turning blades and two separate and distinct presser plates in order to enable it to clasp and turn the upper fold of the tuck. If the claim, therefore, were for that which is actually shown as operative, it would have to read—the combination of two turning blades 33 with two presser plates 34, etc., and if it were thus framed, you would at once perceive that your machine has no such two turning blades combined with two presser plates. We refer to your tucker blade which is a single blade and which is com-

bined with grippers in such manner that the upper fold of the tuck may be clasped and turned over. If this fourth claim should be construed to embrace your mechanism, it would be void, because turn over clasps were old in the art; it is not necessary here to point to them, and it would not be likely that Messrs. Lorenz & Honiss would endeavor to give such a construction to this claim as would embrace your mechanism, because by so doing they would run counter to claims made in subsequent patents granted them, which we will hereafter consider. We are confirmed in our view that the fourth claim is for an inoperative combination and that it can never be construed to mean the duplication of the parts which it mentions, by reading the fifth claim of the same patent which does call for this duplication of parts, in that it specifies the two presser plates 34 and 34' as necessary features of the operative combination of such fifth claim. Of course as you have not two such presser plates you do not infriage the fifth claim. On the whole, we do not think you need fear any assault on the part of the owners of patent No. 333,647—1st, because said patent does not support actual machinery in use; 2nd, because the essential claims of the patent are in our opinion, not found in your mechanism. We do not in terms speak of the remaining five claims of this patent, because they are for contrivances so far away from the Claussen mechanism that they do not appear to deserve special attention.

We will now turn our attention to the next patent No. 337,965, of Lorenz & Honiss.

This patent was in litigation in a suit brought by the New York Paper Bag and Manufacturing Co. *vs.* Hollingsworth & Whitney Co., and was in substance held to be so closely limited to the details shown that the machines of the Union Paper Bag Co., the defendants' machines in that suit, were not infringements thereof. The only claims

of this patent which seem to deserve any consideration on our part are the second and third.

The second claim is for the combination "of the reciprocating carriage 38, the presser plate 51, the side grippers 67 and 68 and the front gripper 85, all operating together, substantially as described". In the first place, regarding that claim, we have to say that the Claussen machine does not operate to form the diamond fold with the aid of the elements mentioned. They alone would never produce a diamond fold on the Claussen machine. In stating this, we understand the reciprocating carriage of the claim to be tantamount to your cylinder; the presser plate of the claim to be tantamount to your tucker plate; the side grippers and the end gripper of the claim to be tantamount to those grippees on the Claussen machine which connect with the carrier 56. Now, if you had all these parts in your machine without the grippers that connect with the tucker plate, you would not produce a diamond fold. Therefore, the combination of this claim is not valid as against you. Apart from this, if we admit the reciprocating carriage of the claim to be represented by your cylinder, as was intimated by the Circuit Court of Appeals in the Boston suit above referred to, the combination, the naked combination, of a cylinder with a presser plate, side grippers and front gripper was not new at the time this patent No. 337,965, was issued. We find the same combination for substantially the same purpose, amongst others, in the Stilwell patent No. 147,998, of February 25, 1874, and therefore hold that your Claussen machine does not infringe said second claim of patent No. 337,965, and also that said claim is not valid if construed to embrace other than the specific thing shown, and that specified thing you do not use. On looking at the Stilwell patent of 1874, to which we have just referred, we observe that in terms it also covers the combination of a presser with the fingers and the cylinder.

The third claim of the patent No. 337,965, which we

are now considering, is not contained in the Claussen machine (nor are any of the following claims), because it is limited to the fingers 96 and 96′, neither of which, nor equivalents thereof, are used by you. This remark also disposes of the first claim of patent number 337,965.

We now turn our attention to patent number 337,966, to Lorenz & Honiss.

This patent has four claims, the first of which does not deserve the slightest attention for evident reasons.

The second claim is for an oscillating presser plate combined with another oscillating presser plate. The patent shows one of these oscillating, that is to say, pivoted presser plates arranged to receive the blank on its upper surface beneath the other oscillating, that is to say, pivoted presser plate, which has clamps to grip the outer tucks of the bag plank. The two plates at a certain position of the machine appear to act as presser plates in the sense that they seem to press the blank between them. If the term "presser plate" therefore, is given to these plates for the reason that they press the one upon the other with a blank bag or partially finished bag intervening, we find no *such* presser plates in your machine. The carrier 56 of your machine, in its co-action with your tucker plate, is not a presser plate, nor is the tucker plate of the Claussen machine in its co-action with the carrier 56 a presser plate. These two parts of the Claussen organism do not press anything between them. The only time when one of your pivoted-gripper bearing and oscillating parts becomes a presser plate is at the time the swinging arm carrying the presser block which we referred to in the opening part of this opinion, as having been substituted for the folder plate 93, comes down upon the carrier 56. At that time then you might have in the Claussen machine the combination of two oscillating presser plates, each of which is capable of swinging on a pivot. But precisely such an

arrangement of oscillating presser plates is shown in the prior patent No. 331,722 of Lorenz & Honiss, which prior patent deprives Lorenz & Honiss from claiming under the patent we are now considering, No. 337,966, that they are the first to have combined for any purpose, two oscillating presser plates. You will observe the super-position of oscillating presser plates in figure 25 of the prior Lorenz & Honiss patent No. 331,722.

The third claim of patent No. 337,966 is for the combination of two presser plates with one another, each of which presser plates is provided with side grippers and with a front or end gripper. This third claim does not call for oscillating presser plates and is therefore clearly met by the Lorenz & Honiss patent No. 337,965 (see figure 9). Moreover, we do not understand that you have such a combination as this claim evidently contemplates. It is true you have your carrier 56 with side grippers and front gripper, and you have your tucker plate with side grippers and front gripper, but we cannot persuade ourselves to the belief that these two plates in their relation to one another are presser plates, or that they can be properly so styled, because they do not press any thing between them; but if by any chance it should be claimed that because your carrier has side and end grippers which press paper against it, and your tucker plate has side grippers and end gripper which press paper against it, and that for that reason each of these parts deserves to be styled a presser plate, then and in that case the anticipation of the claim by the prior Lorenz & Honiss patent No. 337,965, becomes the more pertinent. Under all circumstances we therefore hold that you are in no manner endangered by the existence of the third claim of patent No. 337,966, which we are here considering. Of course you understand that the patent No. 337,965 owing to its number and also to its date of applica-

tion, May 15, 1884, must be regarded as anticipating anything shown in patent No. 337,966.

We now come to the fourth claim of patent No. 337,966, which Mr. Walker so ably discussed. This fourth claim reads as follows:

"4. The combination of a presser plate, oscillating on a pivot and two side grippers and one front gripper clasping a paper tube to that presser plate, substantially as described."

This claim, as you will observe, is not for the combination of two presser plates with their grippers, but is for the supposed combination of one single presser plate with its grippers, saying that that presser plate should be oscillated. Of course that is not new—is clearly shown in figure 9 of patent No. 337,965—is also shown in the Stilwell patent No. 147,998 of February 24, 1874, and is therefore in all its phases so absolutely anticipated that no valid claim of any kind can be based upon it. We regard the Lorenz & Honiss patent No. 337,966, so far as it may be construed to cover the Claussen machine, as entirely void and of no effect.

Of all the claims in Lorenz & Honiss patent No. 361,951, which is the fourth patent to which we have devoted our attention, only the 18th deserves attention. This 18th claim reads as follows:

"18. The combination in a bag machine of the traveling folding bed having grooves crosswise to the motion thereof, mechanism holding the bag blank on said bed over said grooves, creasers operating in connection with the grooves to crease the blank, rolls for receiving the creased blank from said bed, and the blades operating to deliver the blank folded at said creases from said bed to said rolls, all substantially as described."

At first blush it would seem as though you did use that combination, but in point of fact you do not. You do not use the "blades" of the patent

No. 361,951, which are in fact three blades, of which two are set in line with one another, and the third central blade set out of line with the other two, but whether or not you should be held to use substantially such a device as this claim calls for, is immaterial because substantially the same invention is shown in the Stilwell patent No. 206,838, of June 30, 1878, in which all the elements are contained of claim 18, excepting, that instead of the "blades" an oscillating folding finger is shown to deliver the blank or bag to the rollers. Hence, you cannot be held to infringe this claim unless you are also held to use the blades of the claim. As soon as the patentees should seek to construe their blades as anything that will deliver a blank to the rollers, the anticipation referred to is complete.

The fifth patent under consideration is the Stilwell patent No. 407,794. The only claim which we have deemed it worth our while to consider in this patent is the 20th, which seeks to cover the combination of the feed roll with fingers and cams whereby said fingers are made to move inward to engage the blank at a certain point and to remain there for a certain time. This is exactly what the fingers H of the Stilwell patent No. 147,998 of February 24, 1874, accomplish, and we therefore cannot perceive of any patentable invention in this 20th claim.

Finally, we come to the Stilwell patent No. 417,346. We do not regard this patent as in your way, especially as we were clearly given to understand that you do not use an adjustably connected clip like the clip C^3 of this patent, nor any equivalent thereof.

We, therefore, submit that under the Claussen patent you are at liberty to maintain in the market, machines such as we have seen at your establishment, without danger of

being held to infringe any of the patents which we have been called upon to investigate.

We remain

Yours very truly,

BRIESEN & KNAUTH.

P. S.—We return herewith all the papers used in connection with this matter.

Elsas Exhibit, No 3.

NEW YORK. *Feby 15, 1898.*

ALBERT H. WALKER, Counselor at Law,
133 Hawthorn Street,
Hartford, Conn.

Dear Sir --I have your bill of Feby 14th, and enclose herewith check for $50. Kindly return the receipted bill to me. I wish to ask you if you investigated the Stillwell patent, in searching the Claussen patent, which you found entirely valid. I notice in your review and search of the Claussen patent, that you particularly referred to the patents of Lorenz & Honnis. It maybe, however, that the Claussen patent does not interfere at all with the patent issued to Stillwell, and afterwards assigned to the Union Paper Bag Company.

As some of the parties whom I may interest in the organization of this Company may prefer to have an additional search made; could you recommend to me a lawyer in N. Y. City or near by, who is capable of going over these patents? Any information you can give me on this subject will be highly appreciated. Hoping to hear from you by early mail, I remain,

Yours truly,

H. ELSAS.

(Enclose check).

Elsas Exhibit, No. 4.

Home Chambers, 133 Hawthorn St., Hartford, Ct.
Wednesday, February 16, 1898.

HERMAN ELSAS,

Dear Sir.—I have received your letter of February 15. I did thoroughly consider the Stillwell patent, in connection with the opinion which I gave upon the Claussen patent; but I did not refer to the Stillwell patent so particularly as to some of the patents of Lorenz and Honiss, in that opinion, because the Stillwell patent is more remote than those of Lorenz and Honiss from the Claussen patent.

I know most of the patent lawyers in New York; but I think that none of them are at present well acquainted with paper bag machine patents or paper bag machines. The man in New York who knows the most about the subject is probably Frederic H. Betts, senior member of the firm of Betts, Sheffield, Betts & Betts, in the Equitable Building. Mr. Betts is the leading patent lawyer in New York City, and his charges for work are very high; and it may be that he is under a retainer from the Consolidated S. O. S. Bag Company. To procure his opinion upon the question whether the Claussen machine infringes any prior patent would necessitate a great deal of work by him, and I should judge would cost a thousand dollars at least, for he charges a hundred dollars a day for his services, as I am informed. The most competent man in Philadelphia to furnish an opinion upon the subject is Francis T. Chambers, 712 Walnut street; but he is attorney for the Union Paper Bag Company, and therefore not more available for you than Mr. Betts. The man in this country to whom I should apply for an opinion on the subject, if I wanted one for my own guidance, is William H. Honiss, of Hartford, one of the inventors of the Lorenz and Honiss patents; but Honiss is a patent solicitor and expert, and inventor, and

not a lawyer; and his opinion might not carry so much weight with investors, as would the opinion of either of several other men.

The New York expert whose opinion would be most valuable as a guide to you, and also most weighty with investors, would probably be Mr. Edward E. Quimby, 122 Liberty street. But he would have the whole art of paper bag machines to learn, and his retainer and other compensation for an opinion, would amount to a considerable sum.

Frederick P. Fish, 80 Broadway, New York, is a patent lawyer of great ability and enormous practice, who, if he had time to thoroughly investigate the subject, could furnish you with an opinion of great weight upon the subject; but Fish is a high-priced man, and has been and I think still is attorney for certain paper bag machine people in Cleveland, Ohio, and also for the Eastern Paper Bag Company.

An opinion from Edmund Wetmore, of Wetmore & Jenner, on Pine street, in New York, would have great value with investors, because his reputation is excellent and is deserved, and his experience in patent cases has been very extensive during more than thirty years; but I believe he has never had any connection as counsel or attorney, with any of the paper bag companies.

Rowland Cox, 229 Broadway; A. V. Briesen, 229 Broadway; B. F. Lee, 20 Nassau street, and John R. Bennett, 29 Nassau street, are other excellent patent lawyers, whose opinions would deserve great weight with investors, when arrived at after adequate and deliberate examination of the paper bag machine patents involved in any inquiry, touching the validity and value of the Claussen machine and letters patent.

Yours very truly,

ALBERT H. WALKER.

Elsas Exhibit, No. 5.

New York, *Feby 17, 1898.*

Mr. ALBERT H. WALKER,
133 Hawthorn Street, Hartford, Conn.

Dear Sir.—Your information as given to me in your letter of yesterday is highly appreciated. The parties whom I wish to interest in this Company have selected Mr. Briesen to investigate the Claussen patent. I had a conversation with Mr. Briesen this afternoon, and in order to facilitate matters, I would appreciate it, if you could send me the opinion of the court, and also all the records and the patent law suits which have to be investigated in connection with the Claussen machine. Of course, Mr. Briesen could probably find all these matters himself; but as you no doubt have them all together, and could probably spare them for a short time, it would be very advantageous to have you forward me these opinions and records, meaning all the law suits of the Stillwell and Lorenz & Honiss patents, as well as any other litigations which would have bearing upon the Claussen machine.

I have requested Mr. Claussen to send for copies of the patents of Stillwell and Lorenz & Honiss, and I will probably receive them within a few days. Mr. Claussen has probably told you that he forwarded to me a copy of the statement and opinion relevant to his paper bag machine which was given by you. In reading it over, I cannot understand on the first page the following:

"The applicant has not yet taken any action in response to the Patent Office action of Nov. 7th, 1896."

Will you kindly explain this to me? Any facilities or information which you can give me or Mr. Briesen to investigate this matter thoroughly and without much delay will be appreciated. I remain,

Yours respectfully,

H. ELSAS.

Elsas Exhibit, No. 6.

HOME CHAMBERS, 133 HAWTHORN ST., HARTFORD, CT.

Friday, February 18, 1898.

HERMAN ELSAS,

Dear Sir.—In response to your letter of February 17, I have sent you to-day by express, a heavy package containing the complete records in the great litigations between the Union and the Consolidated paper bag people, and containing the briefs for the Consolidated people. I do not have the opinions of the courts, except in my law books; but they can be found by Mr. Briesen as follows: New York Paper Bag Machine Co. *v.* Union Paper Bag Machine Co., 32 Fed. Rep.; Union Paper Bag Machine Company *v.* Waterbury, 39 Fed. Rep.; Union Paper Bag Machine Co. *v.* Waterbury, 70 Fed. Rep.; New York Paper Bag Machine Co. *v.* Hollingsworth & Whitney Co., 48 Fed. Rep.; New York Paper Bag Machine Co. *v.* Hollingsworth & Whitney Co., 56 Fed. Rep. But neither the records, briefs, or opinions which I mention, contain anything really relevant to the question of the validity of the Claussen paper bag machine patents, upon which you have taken an option, or relevant to the question whether the existing Claussen paper bag machine, infringes any patent belonging to another. Those questions can be solved only by comparing those Claussen patents and that Claussen machine with all of the hundreds of paper bag machine patents which have been issued within the last seventeen years.

My written opinion from which you quote that "The applicant has not yet taken any action in response to the Patent Office action of November 7, 1896" was an opinion signed by me December 24, 1896. That statement was true then; but of course it is not true now, for the applicant long ago took action in response to the Patent Office action of November 7, 1896, and in due time ob-

tained his patent of February 8, 1898, in pursuance of the application to which that action referred.

Mr. Briesen is a very competent man to investigate the relations of the Claussen patents and machine to prior patents; but it will take him at least a month to get to the bottom of the matter, unless he has the asssistance of some one already well acquainted with the subject, as a guide on his exploring expedition. But I do not know anyone who is available for that purpose at present; and I can see nothing to do, except for Briesen to wade through all the unexpired paper bag machine patents, as I have done in 1896; and he will find that to be a very big job, because they are so numerous and so complicated.

Yours very truly,
ALBERT H. WALKER.

Elsas Exhibit, No. 7.

New York, *Feby 19, 1898.*

Mr. ALBERT H. WALKER,
133 Hawthorn Street, Hartford, Conn.

Dear Sir.—I am greatly obliged to you for the prompt attention you have given my request as contained in my letter of the 17th inst. I shall take good care of the records, and will return them to you as soon as we are through with them. It seems to me that the investigation of the Claussen machine, which is patented, in comparison with the other patents, is rather a difficult task.

Now the question is, will Mr. Briesen not be able to curtail his work, and still make a thorough investigation, if you will give me an outline of the main points which have to be investigated? I know there are a great many paper bag patents, but a great many of them are practically worthless, some of them have expired, and from my own experience in the line of paper bag machinery, I can

find nothing new in the Claussen machine, *excepting* the forming of the bottom and its mechanism connected therewith; and in this connection I desire to state that we are running some machines in our place now, and have been for years, on which there is no patent, and which are being run by a great many other people, and these machines have many parts which are now employed by the Claussen machine.

Of course, Mr. Briesen has the facility of looking at the Claussen machine at our place in N. Y. City, and this will be of great assistance to him.

Now what I wish to hear from you, and I think you will be able to give me what I want, is an outline which should be followed in the matter of investigation. You are thoroughly acquainted with the subject to be investigated, and under your guidance, Mr. Briesen's work should be very thorough and complete. I believe he is a very competent man, and if he is guided in this investigation and only has to explore the main points I wish, I believe that he can finish the work in a reasonable time, and still have the search as complete as the parties, whom I wish to interest, will probaby require.

I should like to hear from you very fully in reference to this matter, before approaching Mr. Briesen any further. If I can hear from you by Tuesday morning, I should be very thankful, as I don't want to lose any more time to have the search made.

Yours truly,

H. Elsas.

P. S.—The main question at issue is, in my estimation, the comparison of the Claussen machine parts forming the bottom, with such parts as are now employed by the S. O. S., or the Union Paper Bag Company.

Elsas Exhibit, No. 8.

HOME CHAMBERS, 133 Hawthorn St., Hartford, Ct.
Monday, February 21, 1898.

HERMAN ELSAS,

Dear Sir.—I have received your letter of February 19. My written opinion relevant to the Claussen paper bag machine inventions, was dated December 24, 1896; and it treated those inventions as they then existed on paper, in connection with the paper bag machine patents, which had been granted in the United States up to that time. Now if Mr. Briesen is to verify my conclusions in all respects, independently of myself, he must compare the Claussen paper bag machine patents, and particularly the one of February 8, 1898, with the hundreds of patents which I examined in order to reach those conclusions. But if it is sufficient for him to consider only the debatable questions which I decided in reaching my conclusions, and to confine his consideration to the Claussen patent, of February 8, 1898; he will be doing enough in my judgment, if he compares that patent with the Lorenz & Honiss patents No. 333,647 of January 5, 1886, and No. 337,966, of March 16, 1896; those being the only living patents, which, in my opinion, come near enough to the Claussen patent of February 8, 1898, to raise any real question of infringement.

The commercial machine of the Consolidated people, is shown in the Lorenz & Honiss patent, No. 361,951, of April 26, 1887; and the Stillwell patent, No. 407,794, of July 30, 1889, shows the commercial machine of the Union people.

Of course my opinion of December 24, 1896, does not cover any patents which have been issued since that time to anybody except Claussen; and does not cover the few differences between the Claussen machine in your possession, and the Claussen patent of February 8, 1898. You will remember that those differences relate to the final flap

folding mechanism; and if they should be found to infringe some prior patent, they could be readily changed so as not to infringe, as I understand. The mechanism for making the tucked paper tube originated with Benner, but the Benner patent expired years ago. The important point about the Claussen machine is his mechanism for making the diamond fold, as you rightly understand. I do not have any reason to suppose or to fear, that the new final folding flap devices of the Claussen machine in your possession, do infringe any outstanding patent; but still I think the point should be looked up on your behalf, before you build a set of machines, and, if practicable, before you organize your corporation. Nor do I have any reason to fear or suppose that the Claussen machine, in your possession, infringes any patent issued since the date of my opinion, December 24, 1896; but, I think, that point also should be looked up.

I may mention that I have to-day received an order from a Michigan corporation to examine a very complicated patent with twenty-four claims, issued February 15, 1898, on a thrashing machine, and to ascertain and report whether it infringes any other patent, and whether it is valid. This is a more difficult job than Briesen's would be even if he had no help from me; unless I find out early in my work on the case, either that the patent is void, or that it does infringe some other patent; and I do not just see how I can manage the matter consistently with other work having prior claims upon me. I should mention also that I cannot do any work for you or for any of my clients during week after next; because that is the week of my course of lectures in the law department of Michigan University.

Yours very truly,

ALBERT H. WALKER.

Elsas Exhibit, No. 9.

NEW YORK, *Feby 23, 1898.*

Mr. A. H. WALKER,
133 Hawthorn Street, Hartford, Conn.

Dear Sir.—Your esteemed letter of the 21st inst. came to hand. I beg to thank you very much for the full explanation you have given me in your last letter. Mr. Briesen has already started his investigation, and will probably be ready inside of two weeks to render his opinion, after completely searching such points which I have asked him to investigate.

My instructions to Mr. Briesen were to the effect that he should investigate the Stillwell patents, and the Lorenz & Honiss patents, and particularly those machines which are now in commercial use both by the Consolidated and Union Paper Bag Company. This is about all that I am particularly interested in.

Yours very truly,
H. ELSAS.

Elsas Exhibit, No. 10.

Surety Building, 100 Broadway, New York,
Friday, August 18, 1899.

THE CONTINENTAL PAPER BAG COMPANY,
61-63 Varick Street,
N. Y. C.

Dear Sirs.—In response to your letter of August 8, and to the oral request of Mr. Elsas to-day, I have considered the letter of Mr. Edward E. Claussen of July 31, 1899, with a view to decide whether the change in the Claussen paper bag machine, which is described in that letter, can operate to alter my conclusion as to the ques-

tion of infringement by that paper bag machine of claim 4 of the Lorenz and Honiss patent No. 337,966, of March 16, 1886.

My original opinion on that question of infringement, is contained in pages 4 to 9 inclusive, of the elaborate written opinion relevant to six paper bag machines of Edward E. Claussen, which written opinion is dated December 24, 1896. At that time the Claussen machine, which is now represented by letters patent, No. 598,497, of February 8, 1898, was represented by application No. 600,861, of July 29, 1896. In that opinion I took the ground that the Claussen machine does not infringe claim 4 of the Lorenz and Honiss patent, No. 337,966; because the Claussen carrier 56 is not an equivalent of the "presser plate" of that claim; because it does not perform the same function in substantially the same way; and because the Lorenz and Honiss patent is far from being a primary one, and must, therefore, be limited to the particular mechanism which it described, and is not entitled to any broad range of equivalents. The same reasons apply with the same force to the Claussen machine as changed according to Mr. Claussen's letter of July 31, 1899; because that change has no relevancy to those reasons. It consists simply in substituting a pivoted gripper, worked by a spring, for a hook-like gripper which had some elasticity of its own. I did not think, at the time of my opinion of December 24, 1896, and do not think now, that the Lorenz & Honiss patent is limited in respect that the grippers called for by the fourth claim thereof are pivoted grippers; and I did not base my opinion of non-infringement at all upon the fact that one of the Claussen grippers was not pivoted. Pivoted grippers and unpivoted grippers are much older than the Lorenz and Honiss invention; and the grippers of claim 4 of the Lorenz and Honiss patent are not its distinguishing characteristic. That distinguishing characteristic resides in the presser

plate specified in that claim; and neither that presser plate nor any equivalent thereof is to be found in the Claussen machine, since he substituted a pivoted gripper for a hook-like gripper, any more than it was to be found before that substitution. The subject matter of claim 4 of the Lorenz and Honiss patent can be differentiated from what is shown in several prior patents, only by the fact that the presser plate of that claim oscillates vertically upon a horizontal pivot, through a few degrees, instead of always occupying the same horizontal plane. But that oscillation has not the function which is performed by the carrier 56 of the Claussen machine; namely the drawing of the lower part of the opening end of the paper tube, downward from its otherwise horizontal path of progression. And the carrier 56 of the Claussen machine has not the function performed by the presser plate of claim 4 of the Lorenz and Honiss patent, whether that presser plate be considered to be the one which is numbered 47 or the one which is numbered 67, in the Lorenz and Honiss drawings.

This question of infringement of the fourth claim of the Lorenz and Honiss patent by the Claussen machine is one, of course, upon which different people may differ in opinion, according as they analyze mechanisms more or less thoroughly and accurately. Before forming and stating my view, in my written opinion of December 24, 1896, I gave the point very careful consideration, and I still hold the conclusion which I therein expressed; which conclusion is as applicable to the Claussen machine with the pivoted front gripper, as it was to the Claussen machine with the unpivoted front gripper or stationary hook.

Yours very truly,

ALBERT H. WALKER.

Elsas Exhibit, No. 11.

Floor 25, Park Row Building, Manhattan, New York,
Saturday, October 19, 1901.

THE CONTINENTAL PAPER BAG CO.,
61–63 Varick Street, New York City.

Dear Sirs.—I have received your letter enclosing a copy of the bill of complaint in the case of the Eastern Paper Bag Company *vs.* the Continental Paper Bag Company, lately started in the United States Circuit Court for the District of Maine. The regular course of procedure in that case will be as follows:

On or before Monday, November 4, I shall file my appearance in the court, as your attorney and counsel in the case.

On or before Monday, December 2, I shall file your answer to the bill of complaint.

Thereupon the complainant will file its replication to the answer, on or before Monday, January 6, 1902.

The complainant will then take its evidence in chief; and you will then take your evidence in reply; and the complainant will then take its evidence in rebuttal; and all that evidence will be taken in three months after the replication is filed, unless the time for so doing is extended by stipulation or by order of court; and that time will be extended, if any important occasion arises therefor.

After the evidence has all been taken, it will be printed; and then the attorneys on both sides will prepare and print their briefs; and then the case will be brought on for argument in Portland, Me., as soon as the other engagements of counsel and of the court will conveniently permit.

After the case is argued, the Judge will hold it under advisement, probably for weeks, and possibly for months.

On the whole it is possible that the case may be decided about June, 1902; but it is more likely not to be decided

until later in that year, or even sometime in the year 1903.

I do not think that the case is a very formidable one to defend; because the position of the Liddell patent in the art is so late and so subordinate, that that patent cannot lawfully receive a construction from the Court, broad enough to include any of your machines.

The case would be difficult to learn and understand by a beginner in paper bag machine litigation; but to one who, like myself, has had eighteen years of experience in soliciting, examining and litigating paper bag machine patents, the way to a successful defence seems plain enough.

It is my plan to defend the case with utmost care, so as to avoid all danger of error on our part, or on the part of the Court; and assuming that care to be exercised, I cannot see how it is possible for our defences to be overruled.

The bill of complaint contains a prayer for a preliminary injunction; but that is evidently a mere matter of form not intended seriously.

Some other absurdities are also contained in the bill, including a statement that the doings of the defendant have prevented the complainant using the inventions of the Liddell patent with profit and advantage, and the statement that the doings of the defendant have prevented the complainant from putting those inventions into successful operation.

Moreover the bill is probably demurrable, on account of the non-conformity to what the law requires to be stated in such bills; and I may decide to file a demurrer instead of an answer on the first Monday in December. If I do so, the course of the litigation will be necessarily delayed to the extent of whatever time is occupied in litigating the demurrer. Of course it is not proper to file a demurrer for the sake of delay; but where a demurrer is legitimate, the complainant is responsible for the delay which necessarily results, for the complainant is to blame for not putting the bill into proper form originally.

It is certain that the bill of complaint is not well drawn, and I will decide before December, whether it is worth while to take advantage of its deficiencies by a demurrer.

ALBERT H. WALKER.

Defendant's Exhibit.

DEFENDANT'S TITLE PAPERS.

THIS ASSIGNMENT WITNESSETH:

That I, Albert H. Walker, of Hartford, Connecticut, as trustee, in consideration of one dollar, to me in hand paid by him, divers other valuable considerations also moving me thereto, do hereby assign to Edward E. Claussen, of Hartford, Connecticut, the entire ownership and title in and to letters patent of the United States of America, on improvements in paper bag machines No. 574,020, originally granted to him December 29, 1896; No. 574,666, originally granted to him January 5, 1897; No. 586,735, originally granted to me as his assignee, July 20, 1897; No. 587,929, originally granted to me as his assignee, August 10, 1897; and No. 596,260, originally granted to me as his assignee, December 28, 1897; and also the entire ownership and title in and to the inventions which are embodied, described, or claimed in his application, No. 600,861, filed July 29, 1896, for letters patent of the United States of America on improvements in paper bag machines, and assigned by him to me January 26, 1897; and I do hereby authorize and request the Commissioner of Patents to issue any and all letters patent of the United States that may be granted on said application, to the said Edward E. Claussen, as my assignee of the entire ownership and title in and to said letters patent, and in and to the inventions covered by said application; and I hereby warrant all the titles hereby assigned as against any act

done by me since those titles were assigned to me by the said Edward E. Claussen, by two certain instruments in writing executed by him, and dated January 26, 1897, and recorded in the Patent Office, January 27, 1897, but having held those titles as trustee only, I do not warrant them generally, or against anything which may have been done, or omitted, by the said Edward E. Claussen.

Signed at Hartford, Connecticut, January 12, 1898.

ALBERT H. WALKER.

STATE OF CONNECTICUT, } ss. :
County of Hartford, }

ALBERT H. WALKER, before me appeared, January 12, 1898, and acknowledged the foregoing assignment to be his free and voluntary act, and his signature thereto to be his genuine signature.

JAMES J. QUINN,
Notary Public.

[SEAL.]

THIS ASSIGNMENT WITNESSETH :

That I, Edward E. Claussen, of Hartford, Connecticut, in consideration of One Dollar, to me in hand paid by him, divers other valuable considerations also moving me thereto ; do hereby assign to Herman Elsas, of the Borough of Manhattan, and City of New York, the entire ownership, right, title and interest, in and to the following Letters Patent of the United States of America, on improvements on Paper Bag Machines, namely : No. 574,020, of December 29, 1896 ; No. 574,666, of January 5, 1897 ; No. 586,735, of July 20, 1897 ; No. 587,929, of August 10, 1897 ; No. 596,260, of December 28, 1897 ; and No. 598,497, of February 8, 1898 ; all of which were originally granted upon my invention.

Hartford, Conn., May 26, 1898.

EDWARD E. CLAUSSEN.

STATE OF CONNECTICUT, } ss.:
County of Hartford, }

EDWARD E. CLAUSSEN appeared before me on this 17th day of July, 1898, and acknowledged the foregoing to be a true and correct copy of an assignment made by him May 26, 1898, and sworn to on that date before Charles A. Safford, a Notary Public of this county.

CHARLES A. SAFFORD,
[SEAL.] Notary Public.

WHEREAS, I, Herman Elsas, of the Borough of Manhattan, City of New York, State of New York, hold and own certain Letters Patent of the United States of America for certain improvements in Paper Bag Machines, which Letters Patent bear date and are numbered as follows, viz:

No. 574,020, of December 29, 1896.
No. 574,666, of January 5, 1897.
No. 586,735, of July 20, 1897.
No. 587,929, of August 10, 1897.
No. 596,260, of December 28, 1897.
No. 598,497, of February 8, 1898.
No. 623,983, of May 2, 1899; and

WHEREAS, the Continental Paper Bag Company, a corporation of the State of Maine, is desirous of acquiring an interest therein;

NOW THIS INDENTURE WITNESSETH, That for and in consideration of the sum of one dollar, and other valuable considerations, to me, the said Herman Elsas, in hand paid, the receipt of which is hereby acknowledged, I have assigned, sold and set over, and do hereby assign, sell and set over unto the said Continental Paper Bag Company, all the right, title and interest which I have in the said inventions as secured to me by said Letters Patent.

The same to be held and enjoyed by the said Continen-

tal Paper Bag Company for its own use and behoof, and for the use and behoof of its successors and legal representatives, to the full end of the term for which said Letters Patent are granted, as fully and entirely as the same would have been held and enjoyed by me, if this assignment and sale had not been made.

IN TESTIMONY WHEREOF, I have hereunto set my hand and affixed my seal this sixth day of June, eighteen hundred and ninety-nine.

HERMAN ELSAS. [L. S.]

Sealed and Delivered in Presence of
E. W. KENNEDY.

CITY OF NEW YORK, *County of New York*, ss.:

On the sixth day of June, 1899, before me personally appeared Herman Elsas, to me known to be the individual described in, and who executed the foregoing assignment, and acknowledged to me that he executed the same.

IN WITNESS WHEREOF, I have hereunto set my hand and notarial seal in the City of New York, this sixth day of June, 1899.

[SEAL.]

E. W. KENNEDY,
Notary Public,
Kings Co.
Cert. filed in New York.

THIS ASSIGNMENT WITNESSETH: that I, Edward E. Claussen of Hartford, Connecticut, in consideration of one dollar ($1) to me in hand paid by The Continental Paper Bag Company, which is a corporation created and existing in due form of law in the State of Maine, and has a regular and established place of business at 61 and 63 Varick street, in the Borough of Man-

hattan and City and State of New York, other valuable considerations also moving me thereto, do hereby sell and assign to the said The Continental Paper Bag Company, one undivided half of the entire right, title, interest, and ownership in and to letters patent of the United States, No. 635,090, granted October 17, 1899, for a paper bag machine to Edward E. Claussen and George Mortson of Hartford, Connecticut.

Signed at Hartford, Connecticut, this 6th day of November, 1899.

EDWARD E. CLAUSSEN.

STATE OF CONNECTICUT, } ss.:
County of Hartford, }

On this 7th day of November, 1899, Edward E. Claussen, of Hartford, Connecticut, appeared before me and acknowledged the foregoing assignment as his free and voluntary act.

HENRY D. MILDEBERGER,
Notary Public.

[SEAL.]

UNITED STATES CIRCUIT COURT,

DISTRICT OF MAINE.

EASTERN PAPER BAG COMPANY

v.

CONTINENTAL PAPER BAG COMPANY.

Amendment to Defendant's Answer.

Now comes the defendant (and by special leave of the Court, upon motion and cause shown, after due notice to the complainant, supported by affidavits) and amends the defendant's answer by adding thereto the following paragraphs:

"The defendant says, on information and belief, that said Liddell Letters Patent No. 558,969, are void, because William Liddell was not the original, first and sole inventor of the combination claimed in any claim of said Letters Patent; and because that sub-combination of each of those combinations which is designated in claims 1, 2, 3, 4 and 7 of said patent as "operating means for the forming plate adapted to cause the plate to oscillate about its rear edge upon the surface of the cylinder during the rotary movement of said cylinder," and which is designated in claims 5 and 6 of said Letters Patent as "power devices for oscillating the said forming plate upon the movable frame, so that its rear edge travels in conjunction with and at the same rate of speed as the cylinder" (and which sub-combination is shown in the drawings of said patent to consist of the cam K', the cam K, the arm F', the arm F, the rod k, the link k^2, the arm connecting that link to the gear M', and also that gear M', the upper gear M, the lower gear M, and the gear N) was never invented or

planned by William Liddell, but was contrived by some other person without his knowledge, and was inserted in the combination of each of the claims in the Letters Patent, and in the description and drawings of that patent without his direction or procurement; and because the said sub-combination, thus contrived and introduced into the Liddell patent by some person other than William Liddell, is the most essential and only distinctive part of the mechanism described in that patent and delineated in the drawings thereof."

"The defendant says, on information and belief, that said Liddell Patent, No. 558,969, is void, because Rudolph M. Hunter, or some other person, other than William Liddell, participated in inventing the combination which is claimed in claim 1, and the combination which is claimed in claim 2, and the combination which is claimed in claim 3, and the combination which is claimed in claim 4, and the combination which is claimed in claim 5, and the combination which is claimed in claim 6, and the combination which is claimed in claim 7 of said Letters Patent."

All of which statements and defenses this defendant is ready to aver, maintain and prove as this Honorable Court shall direct, and it again prays hence to be dismissed with its costs in this behalf sustained.

In witness whereof, the said defendant, the Continental Paper Bag Company, has duly executed this answer, and has hereunto affixed its corporate seal and caused the same to be attested by its Secretary.

Continental Paper Bag Company,
[seal.] Herman Elsas,
Prest.

Attest:
I. Kuhe,
Secy.

Albert H. Walker,
Defendant's Counsel.

Allowed and filed March 2, 1903.

UNITED STATES CIRCUIT COURT.

DISTRICT OF MAINE.

EASTERN PAPER BAG COMPANY

vs.

CONTINENTAL PAPER BAG COMPANY.

Evidence taken on behalf of the defendant, at the office of Albert H. Walker, Floor 25, Park Row Building, Manhattan, New York, beginning Monday, March 16, 1903, at 11 o'clock in the forenoon, and continuing thereafter from time to time, by adjournment; the said evidence being taken before William E. McReynolds, a Notary Public, having authority to act as such in Manhattan, New York, and being taken down by Grace Smith, a typewriter operator; and being thus taken before William E. McReynolds, by Grace Smith, in pursuance of a stipulation of the parties, which is prefixed to the complainant's evidence, and which was made March 6, 1902.

Present—WILLIAM E. MCREYNOLDS, the Notary Public; and Mr. S. R. BETTS, Counsel for the Complainant; and ALBERT H. WALKER, Counsel for the Defendant.

WILLIAM LIDDELL, a witness produced on behalf of the defendant, being duly sworn by the Notary Public, deposes as follows, the direct questions being put by Mr. Walker:

Q. 1. Please to state your name; and where and in what year, you were born?

A. My name is William Liddell. I was born in Scotland, in 1842.

Q. 2. How old were you when you came from Scotland, to the United States?

A. Twenty-five years old.

Q. 3. Where is your present residence?

A. No. 401, 10th Street, Brooklyn, New York.

Q. 4. How long have you lived in Brooklyn?

A. Ever since 1888.

Q. 5. Are you a citizen of the United States?

A. I am.

Q. 6. What is your trade or profession in life?

A. A machinist; but have been in business for the last twenty-five or thirty years most of the time, inventing and constructing machinery.

Q. 7. I show you a patent office copy of each of the following letters patent of the United States; and I ask you if you are the William Liddell upon whose applications they were granted. The numbers and dates of the patents are as follows:

No. 370,548, of September 27, 1887. No. 455,407, of July 7, 1891. No. 487,225, of November 29, 1892. No. 491,573, of February 14, 1893. No. 492,498, of February 28, 1893. No. 535,591, of March 12, 1895. No. 558,969, of April 28, 1896. And No. 564,288, of July 21, 1896?

A. I am the same William Liddell.

Q. 8. I observe that the first of the eight patents I have shown you, was granted to you and to Robert Gair, jointly, Mr. Gair being your assignee, of one-half of the interest therein. And I ask you to state who Robert Gair is?

A. He is a manufacturer of paper goods, printing, embossing and a variety of paper novelties, in Brooklyn, New York.

Q. 9. Did the machine of that patent, No. 370,548, ever go into regular use in manufacturing paper bags?

A. Yes, he used it, and operated it for a number of years.

Q. 10. I observe that the second, third, and fourth of the patents I showed you, were granted to Wells A. Bingham, of Bloomfield, New Jersey, as your assignee. And I ask you to state who Mr. Bingham was?

A. Mr. Bingham was also a manufacturer of paper goods, and paper bags, and flour sacks, in Franklin Street, New York.

Q. 11. Please to state whether machines were ever used commercially, in accordance with either of those three patents?

A. In reference to that; I built three machines myself, and sold them to Mr. Bingham, which he operated for some time, and they are still in the market operating. I also made a number of those machines and sold them in various States of the Union; also Canada, I believe. That is in conjunction with Cotton & Hewes, machinists in Centre Street, New York. I gave them one-third interest, for their influence.

Q. 12. I observe that patent, No. 455,407, was granted to yourself and David S. Walton, jointly, Mr. Walton being your assignee of one-half interest therein. And I ask you to state who Mr. Walton was?

A. Mr. Walton was also a manufacturer of paper goods, and paper bags, flour sacks, paper boxes, of various descriptions. He is located at Franklin Street, New York.

Q. 13. Please to state whether any machines were ever made and used in accordance with that patent?

A. Yes, I made three for Mr. Walton.

Q. 14. I observe that the patents No. 535,591, and No. 558,969, and No. 564,288; were all granted to the Eastern Paper Bag Company, as your assignee; and I ask you to state what concern or corporation the Eastern Paper Bag Company was?

A. Well, in reference to that; I have no knowledge of what they were. I simply was employed by the Eastern

Paper Bag Company, to perfect a certain machine that had partly been developed in Philadelphia.

Q. 15. What was the name of the man who employed you, on behalf of the Eastern Paper Bag Company, to perfect that machine which had been partly developed in Philadelphia?

A. Well, there was an appointment made for me at the Astor House to meet the Eastern Paper Bag Company there, for the purpose of arranging terms. Present, was Mr. Coburn, Mr. Haverstick, and Mr. Taylor of Cleveland, Ohio, and Mr. Stearns of Boston.

Q. 16. About when did that interview at the Astor House occur?

A. As near as I can recollect; it was in the early part of 1883, in January.

Q. 17. That was more than twenty years ago, was it?

A. It was ten years ago.

Q. 18. What year did that Astor House interview occur in?

A. I think the early part of 1893.

Q. 19. How did you happen to say in reply to Q. 16, that it was in the early part of 1883?

A. Simply I made a mistake.

Q. 20. Did you make any bargain at that Astor House interview, or soon afterward, with the Eastern Paper Bag Company?

A. I did.

Q. 21. What work, according to that bargain, were you mainly engaged to do?

A. I was engaged to perfect a certain machine that was partially constructed by a Mr. Purvis, for the purpose of making S. O. S. bags.

Q. 22. Where was the Purvis machine and where was Purvis at that time?

A. Some time after I was engaged, I arranged to have the machine taken to a machine shop in Twelfth Street,

Philadelphia; and after that I started to reconstruct the machine. And Mr. Purvis was in to see me daily, during the time I was constructing it.

Q. 23. How long did you continue at work reconstructing the Purvis machine for the Eastern Paper Bag Company, after you began that work?

A. I worked from the early part of 1893, pretty much all that year.

Q. 24. What were you doing in 1894 and 1895?

A. I was still at work on it in 1894, a great part of the time in that year. I may have done a little to it in the early part of the year 1895.

Q. 25. Did you continue to live at Brooklyn while you were working on the Purvis machine in Philadelphia?

A. My family lived in Brooklyn. I lived in a hotel in Philadelphia while I was there. That is, I was home every Saturday till Monday morning.

Q. 26. When you made the contract with the Eastern Paper Bag Company in 1893; did that contract cover some particular length of time; or what did it provide in respect of how long you were to work for the company?

A. There was no contract signed in 1893 for any time. I was engaged by the month.

Q. 27. When, if ever, did you first make a written contract with the Eastern Paper Bag Company, to perfect or produce paper bag machinery for it?

A. There was a contract signed in the early part of 1893, stating that I should give my experience and mechanical ability and perfect the said machine.

Q. 28. How long did you continue to work by the month under that contract?

A. I believe till November, 1895.

Q. 29. Did that contract provide that whatever inventions you might make in paper bag machinery, during its

continuance, should be assigned to the Eastern Paper Bag Company?

A. It did.

Q. 30. How did you succeed in your efforts toward perfecting the Purvis machine during the years 1893, 1894 and 1895?

A. Well, the Company seemed to be well satisfied with the results as it progressed. And after it was finished it was taken to Morristown, to the Haverstick paper mill. And I operated it there, I should say, about two weeks. I think I turned out probably two or three hundred thousand bags, and they seemed to be satisfactory.

Q. 31. I show you a lot of paper bags marked "Lorenz Exhibits, Nos. 1, 2 and 3," and I ask you to state whether either of those bags would fairly represent the paper bags which were made by that Purvis machine?

A. This one would not.

The witness specifies Lorenz Exhibit, No. 3.

Q. 32. Please to state whether Lorenz Exhibit, No. 1, or Lorenz Exhibit, No. 2, fairly represents the paper bags which were made by that Purvis machine?

A. I should say they were very much similar.

Q. 33. Did that Purvis machine employ suction boxes to assist in making its product?

A. It did have suction boxes.

Q. 34. Did it have suction boxes after you had perfected it, as well as before you began work on it?

A. It did have suction boxes when I completed it; as I was requested to keep as near the spirit of the original invention as it was practicable to make it.

Q. 35. Did you ever approve the suction box scheme of Purvis, as being a good plan; or did you simply do the best you could with that plan, without discarding the Purvis suction boxes altogether?

Objected to as immaterial and leading.

A. I simply done the best I could, for to perfect the machine under the spirit of the invention it was carried on.

Q. 36. I now show you again, the Liddell patent, No. 535,591, of March 12, 1895, which appears to have been applied for, by R. M. Hunter, your attorney, on your behalf, and on behalf of your assignee, the Eastern Paper Bag Company, February 9, 1894; and I ask you to state whether the machinery shown in that patent, had any connection with the Purvis machine? Please to examine the specification as well as the drawings, to make sure that you recall which one of your inventions, is set forth in that patent?

A. No, I don't consider that this construction has any infringement upon the Purvis machine.

Q. 37. Did you plan the machinery shown in this Liddell patent, No. 535,591, while you were engaged on the Purvis machine, and for the purpose of supplying detailed improvements for such a machine?

Objected to as leading.

A. No, it was after I was through with the Purvis machine, in the year 1895; I was under contract with the Eastern Paper Bag Company.

Q. 38. I call your attention to the fact that though this patent, No. 535,591, was granted in 1895, it was applied for in 1894; and I ask you to refresh your recollection in view of that date of application, and state whether the machinery of this Liddell patent, No. 535,591, was planned by you to be combined with some machinery of Purvis, in a complete paper bag machine on the one hand; or whether, on the other hand, it was planned by you, to be used by itself?

Objected to as already fully answered; and as very leading and suggestive to the witness.

A. I will answer the last question first. It was planned by me, for to be a separate and independent construction of a machine, separate from the Purvis machine, for the manufacture of S. O. S. bags.

Q. 39. Was any machine ever built, as far as you know,

in accordance with this Liddell patent, No. 535,591, of March 12, 1895?

A. I never seen or knew of a machine made of this construction.

Q. 40. You said in reply to Q. 28, that you continued to work till November 1895, under your contract of 1893, with the Eastern Paper Bag Company. Now I ask you to state whether at that time, you were requested to report to the Eastern Paper Bag Company, or to anyone connected therewith, whatever inventions you had made in paper bag machinery, during the time you had been working for the Company, under that contract, and which inventions had not yet been made the subject of applications for patents?

A. Under my contract, I was to assign any and all ideas and inventions or improvements that I might make upon the said machine. I don't remember anything else of the contract with reference to any other ideas to be assigned.

Q. 41. About the time of which you speak, near the end of 1895, did anybody connected with the Eastern Paper Bag Company, ask you to do anything toward applying for any patent or patents, on any ideas which you had for paper bag machinery; and if so, what was the name of the man connected with the Eastern Paper Bag Company, who made such a request to you?

A. As near as I can recollect, in the early part of 1896, I think in the early part of January, I got a letter from Philadelphia, from either Mr. Haverstick or Mr. Hunter, to call at his office, for the purpose of executing two applications, for patents in paper bag machinery.

Q. 42. How long before that, as near as you can tell, had you furnished Mr. Haverstick or Mr. Hunter, or anyone else connected with the Eastern Paper Bag Company, with any information by means of which those two applications could be prepared?

A. To the best of my recollection; in the early part of

1896, I took to Philadelphia some sketches and drawings of two different constructions of a machine for said purpose. About November or October, 1895, I took to Philadelphia. The first time that I gave any information, as near as I can recollect, was some time in 1895, it might have been the Spring, it might have been the Summer.

Q. 43. You say in your last answer, "To the best of my recollection, in the early part of 1896, I took to Philadelphia some sketches and drawings of two different constructions of a machine for said purpose." And, thereafter, in the same answer, you say, "About November or October, 1895, I took to Philadelphia." Now, please to state whether these two dates refer to the same thing, and if so, which was the true date?

A. As near as I can remember; the latter part of 1895, I took the drawings and sketches to Mr. Hunter's office in Philadelphia; and the early part of 1896, I signed them at the same office.

Q. 44. Fix, as near as you can, the month in the latter part of 1895, when you took to Philadelphia, those sketches and drawings for two different constructions of a paper bag machine?

A. I think it was in November, although it may have been October. I can't remember. I couldn't be sure of the month.

Q. 45. Please to look at the Liddell patent, No. 564,288, of July 21, 1896, the application for which was filed January 21, 1896, and state whether that patent corresponds with one of the applications which you signed in Mr. Hunter's office in the early part of January, 1896?

A. It does, as near as I can remember.

Q. 46. Was any paper bag machine ever made as far as you know, in accordance with this Liddell patent, No. 564,288, of July 21, 1896?

A. There was none made after this construction that I ever seen or heard.

Q. 47. About how long before January, 1896, did you first show to Mr. Haverstick, or Mr. Coburn, the ideas or any of the ideas which are set forth in this Liddell patent, No. 564,288?

A. I have no recollection of showing either Mr. Haverstick or Mr. Coburn any sketches or ideas in reference to this machine, before I took the sketches and drawings to Mr. Hunter's office.

Q. 48. In reply to Q. 43, you say that as near as you can remember, in the latter part of 1895, you took the drawings and sketches to Mr. Hunter's office in Philadelphia, for two different constructions of paper bag machines. Now, please to state whether you took the drawings and sketches to Mr. Hunter, for both those paper bag machines, at the same time, on the one hand; or at different times on the other hand?

A. In reference to that, I couldn't be positive. I have the impression that I took both at the same time. But they may have been taken at separate times.

Q. 49. Now, please to turn your mind away from the machine of this Liddell patent, No. 564,288, to the other paper bag machine plan which you took to Mr. Hunter's office in Philadelphia, in the latter part of 1895; and state whether you now have a distinct recollection of the character of that other plan for a paper bag machine?

A. Yes, I think I do remember the general character of that construction of paper bag machine.

Q. 50. Was the folding-bed of that machine, to be a reciprocating carriage or was it to be a rotating cylinder?

A. To the best of my knowledge, I intended and designed it, to be a rotary motion; the forming-plate.

Q. 51. My last question was confined to the folding-bed below the paper, but I did not make that question plain, on that point; and I will try to do better now, by asking whether the folding-bed under the paper, was to be a reciprocating carriage, or a rotary cylinder?

A. The folding-plate As I understand the question, the folding-bed under the paper would mean the cylinder. The folding-plate would be above the paper.

Complainant's counsel desires it noted that after the witness had uttered the words "the folding-plate" in the above answer, Mr. Walker uttered the words "The folding-bed" before any of the rest of the answer was taken down. This is noted because complainant's counsel has very specially requested Mr. Walker in connection with this witness, not in any way to repeat or interrupt the answers of the witness while they are being given and taken down by the typewriter. Complainant's counsel desires to again emphasize this request, as he considers it of special importance in connection with the taking down of the testimony of this witness, under the situation existing, and which the record will fully show before it is closed.

Mr. Walker states to the court that the foregoing statement of Mr. Betts, refers to an involuntary utterance by defendant's counsel, which was occasioned by the fact that though Q. 51 was confined to the folding-bed under the paper, the witness began to make some statement in his answer about the folding-plate; and thus created the impression upon the mind of defendant's counsel, that the question was not understood.

Mr. Walker states to the court that he will do his utmost toward avoidance of anything that may lead the witness; and he respectfully requests Mr. Betts, to do his utmost toward avoidance of anything that may mislead the witness, during the taking of this deposition.

Q. 52. In speaking of the other paper bag machine plan, which you took to Mr. Hunter's office in Philadelphia, in the latter part of 1895, you say that you intended and designed the forming-plate to have a rotary motion. Now please to state how that forming-plate was to be supported above the paper; and after you have told me what

thing was to hold it up, I will ask you what devices you planned to make it rotate?

A. To the nearest of my recollection, the forming-plate was supported by two arms or castings, keyed to the shaft which supported the arms, on the oscillating shaft.

Q. 53. How was the oscillating shaft which supported the arms, to be itself supported?

A. By two castings bolted to the main frame.

Q. 54. Were the two arms to rock with the shaft to which they were keyed?

Objected to as leading.

A. Yes, they were.

Q. 55. What device did that plan include for making those arms to rock?

A. With a connecting arm on the rock shaft operated by a cam on the other shaft. I don't remember the name of it.

Q. 56. What devices did that plan employ for making the forming-plate to rotate?

A. To make the forming-plate rotate, to the nearest of my recollection, I introduced two gears, which I call obliptic gears; which I designed, and expected to have them constructed in a certain shape, so that the forming-plate or the forward end of the forming-plate that comes in contact with the cylinder, would travel at the same speed as the cylinder, during the formation of the bottom of the bag.

Q. 57. What was your idea in employing two "obliptic" gears instead of two circular gears, in the place where you employed the two "obliptic" gears?

A. For the reason that two circular gears would not make the forming plate travel exactly at the same speed as the cylinder. It was necessary to have obliptic gears of a certain shape, to make the forming-plate travel exactly at the same speed as the cylinder.

Q. 58. From what shaft or other thing, where those two "obliptic" gears to receive motion?

A. From a gear on the roll on top of the cylinder, driven to another gear on the rock shaft loosely, with an obliptic gear fastened to the same gear, which operates another obliptic gear giving motion to the other gears that operate the forming-plate.

Q. 59. How many other gears did that plan have, in addition to the two "obliptic" gears, and which other gears, you say, operated the forming-plate?

A. I believe I had to introduce three gears in addition to the obliptic gears, to get the right motion.

Q. 60. Was either of the "obliptic" gears keyed to the same shaft that carried the cam which rocked the arms?

A. Yes, one.

Q. 61. On what shaft did the other "obliptic" gear turn?

A. One of the obliptic gears turned upon the rock-shaft that supports the forming plate.

Q. 62. Was that the same shaft that supported the arms?

A. Yes.

Q. 63. Was either of the three other gears fastened to that "obliptic" gear, so as to turn with it, on the same shaft?

A. Yes, one.

Q. 64. How was the forming-plate supported, by the two arms?

A. I don't exactly understand the question.

Q. 65. You have stated that the two arms rocked upon a shaft; and were caused to thus rock by means of a cam turning on another shaft. Now, I ask you to state whether the forming-plate rotated around a shaft that was journaled in the two arms; or if not, then I ask you to state how the forming-plate was connected to the two arms, so that it could rotate while the arms were rocking?

A. In answer to that, the nearest that I can remember,

the forming-plate was caused to revolve by means of three true gears and two obliptic gears, made of the proper shape; the oscillation of the arms was caused by a cam, on another shaft.

Q. 66. Were these three true gears to be pivoted between the two arms; so as to be carried along with those arms, at the same time that they, themselves, were caused to revolve, by the two obliptic gears; or if not, what thing did support the three true gears?

Objected to as leading.

A. Two of the true gears were journaled upon studs fastened to the same arm, that supported the forming-plate. The third gear was fastened to the shaft that operates the forming-plate.

Q. 67. Do you remember calling upon me in this office, on the evening of January 22, 1903, and explaining to me, at that time, this same plan for paper bag machine, which you have described in answer to the last few questions of this deposition?

A. I remember about that time, that I got, I think, a letter requesting me to call here; but the object I didn't know at that time.

Q. 68. Do you remember what day of the week that call occurred on?

A. It might have been Friday. I forget now.

Q. 69. Do you remember that on that first evening, I asked you to call upon me the next eveaing, and to go with me, to a draftsman and be introduced to him, for the purpose of explaining to that draftsman, how to make a drawing, to represent that plan for a paper bag machine?

A. Yes, I remember that.

Q. 70. Do you remember the name of that draftsman?

A. Yes, Mr. King.

Q. 71. Had you ever met Mr. King, before that time?

A. Never that I am aware of.

Q. 72. In order to show Mr. King how to make a draw-

ing to represent that plan for a paper bag machine, do you remember what you did to guide him in that work, and if so, please to state as much as you remember?

A. Well, I was very busy at that time, and I delayed it till Sunday. Sunday, I made some rough sketches, for the purpose of aiding him. Later I concluded that he would understand it more clearly, by making a crude model of the same, which I made out of paste-board, showing the cylinder, the roll above it, the obliptic gears, and the true gears, the cam, for operating said forming-plate, as near as I could.

Q. 73. Please to look at a sheet of card-board and seven pieces of paste-board which I now produce and show you, and state if you know who it was that made the rough sketches on that piece of card-board, and who it was that cut out those seven pieces of paste-board, and made the pencilled lines which appear upon them?

A. This seems to be the identical paste-board model I made, at the time I stated.

Mr. Walker offers in evidence the parts of the paste-board model which the witness has identified, and requests that the whole of them be treated as one exhibit, and marked upon each piece, "Defendant's Exhibit, Liddell Model" and the pieces are accordingly so marked.

Objected to as immaterial.

Q. 74. Please now to take pins and fasten the seven pieces of paste-board upon the sheet of card-board, so as to show Complainant's counsel the relative arrangement of the seven pieces on the card-board in your plan for showing Mr. King how to make the drawing in question.

A. There's another gear lacking.

Q. 75. Please to arrange the seven parts upon the card-board the way those seven parts ought to go, without trying to show anything about any lacking gear?

A. This represents the cylinder. This represents the gear that drives the top roll above the cylinder. And this

represents the cam, that oscillates the arms that supports the folding-plate. This represents one of the obliptic gears, and this the other, that work together, and that turn the forming-plate, by means of the intermediate gears. And this, the cam, that oscillates or raises and falls, the forming-plate to operate in conjunction with the obliptic gears. This represents the folding-plate and gear for operating the same. This represents the position of the forming-plate taking hold of the bag. And this about the position when the bottom is drawn in shape.

Q. 76. What use did you make of Defendant's Exhibit, Liddell Model, when explaining to Mr. King, how to make the desired drawing?

A. I took this model and showed him repeatedly, the various positions of the different parts while forming the bottom of the bag.

Q. 77. Did Mr. King make any drawing in pursuance of the information you gave him, and to represent your plan for a paper bag machine?

A. He did, and I made some slight alterations in same.

Q. 78. After that drawing was made and completed, and slightly altered by you, did you write your name upon the sheet so as to identify the drawing?

A. I did.

Q. 79. Do you remember what was done with that original drawing, which you signed?

A. Not after I signed it. I had taken it home to look it over, along with an affidavit which I had amended, and returned it to Mr. Walker.

Q. 80. Did you sign the drawing, at the same that you signed the affidavit?

A. That I don't remember exactly.

Q. 81. Did you understand that the drawing was to go with the affidavit?

A. Yes, I understood that distinctly.

Q. 82. I show you a drawing, made with India ink, on

tracing cloth, which purports to have a copy of your signature traced thereon, and which is marked as follows: "Liddell Drawing, No. 1 (signed) William Liddell" and I ask you what this drawing appears to you to be?

A. Well, I should say this is a drawing made from the model on exhibit.

Q. 83. Do you understand that the words "William Liddell" at the lower right-hand corner of this drawing, were written by you, or do you understand that they were traced by somebody else, from the signature which you yourself wrote, on the original Liddell Drawing, No. 1?

A. I positively state that this is my signature. If it is a forgery it is a good one.

Q. 84. Now please to look at the drawing shown you when putting Qs. 82, 83 and this question, and state how it agrees or disagrees, as the case may be, with the drawing which Mr. King made under your direction, to represent your plan for a paper bag machine?

A. As I understand, this is the drawing made by Mr. King to represent my plan.

Mr. Walker offers in evidence the drawing shown to the witness, and which is already marked, "Liddell Drawing, No. 1 (signed) William Liddell" and he requests that it may be marked "William E. McReynolds, Notary Public" and it is accordingly so marked.

Objected to as immaterial.

Q. 85. Was any metal model ever made as far as you know, in accordance with Liddell Drawing, No. 1?

A. Not to my knowledge.

Q. 86. Please to look at the model I now show you, and state how it corresponds with Liddell Drawing, No. 1, not including the cylinder C, or the shaft B, of that drawing, and not including the front gripper c, or the side gripper G, on that cylinder; and not including the side gripper H, on the forming-plate, and not including the front gripper E' on the forming-plate?

A. Will you turn it around once, please? Well, this is the first I seen of this model. And as far as it goes, I should say it represents the Liddell Drawing, No. 1. Of course I can't positively state whether the cam and obliptic gears are made perfectly accurate, without having the cylinder and the other parts to work in conjunction, to the same.

Mr. Walker offers in evidence the model last shown to the witness, and requests that it be marked "Defendant's Exhibit, Model of Liddell Drawing, No. 1", and it is accordingly so marked; and Mr. Walker states to the court, that he will prove by another witness, that the model thus marked, is in exact conformity to Liddell Drawing, No. 1, as far as it goes; not including the cylinder C, or its grippers, and not including the grippers upon the forming-plate; but having the forming-plate represented by a bar of brass for the purpose of showing how that forming-plate will move under the operation of the cam, the arm, and the gears, which are provided therefor, in Liddell Drawing, No. 1.

Objected to as immaterial.

Q. 87. Now please to carry your mind back to the latter part of 1895, when you first took to Mr. Hunter, the drawings and sketches which you say you took to him at that time, for a particular plan for a paper bag machine, and which plan you have now explained is represented by Liddell Drawing, No. 1; and having carried your mind back to that point of time, please to state as well as you can remember, whether you first explained those drawings and sketches to Mr. Hunter, on the one hand; or whether, on the other hand, he turned you and those drawings and sketches over to some draftsman, and directed that your explanations should be made to the draftsman?

Objected to as assuming without foundation, the witness might have explained both to Mr. Hunter and the draftsman.

Question withdrawn.

Q. 88. When you took those drawings and sketches to Mr. Hunter's office, what was said and done about them in your presence by you, or by anyone else?

A. To the best of my recollection, Mr. Haverstick and I went to Mr. Hunter's office, at that time, to show him the sketches I had made, which were very crude and in fact, incomplete, and we had a talk on things in general. I showed to Mr. Hunter a wooden model of the other patent, not this one, and he was very busy at the time, had some customers there talking to him, and I have no recollection of explaining to him the general details of the construction of these drawings and sketches. I remember going to the draftsman's office, that was Mr. Hunter's draftsman (I think *with* the draftsman, I am not sure). It was probably a block or two from his main office. And I think there might have been three or four draftsmen in that same room. I explained to him, as near as I can remember, the construction and principle of what I intended that machine to be, and after conversing some time in reference to it, I left and came home to Brooklyn. I have no recollection of seeing him afterwards; or Mr. Hunter, either, till I was called upon to execute the application papers.

Q. 89. About how long after you took those drawings and sketches to Mr. Hunter's office, was it when you were called upon to execute the application papers?

A. Well, I kept no particular dates; but I should judge it might have been about three months, from the time I took the papers there till I went there and signed them. That is, from the time I took the drawings and sketches there, till I went there and signed the application.

Q. 90. In what way were you called upon to go to Mr. Hunter's office in Philadelphia, and execute the application papers?

A. I received a letter from Philadelphia, to my home in Brooklyn, either by Mr. Haverstick or Mr. Hunter, I can't remember which, that the papers were ready for my signature; that is, the application papers.

Q. 91. How soon after you received that letter did you go to Philadelphia, and to Mr. Hunter's office, in pursuance of the request contained in that letter?

A. Well, I should say it was the following day. I am very prompt in attending to such things.

Q. 92. Fix as near as you can, from your memory, the particular date in the first part of January, 1896, when that visit to Mr. Hunter's office occurred?

A. I can't remember exactly. I will say it might have been either the fifth or the tenth of the month.

Q. 93. On that visit, how many sets of application papers did Mr. Hunter present to you for your signature; on paper bag machines?

A. If my recollection serves me right, he gave me two applications to sign. Although it might have been one at that time.

Q. 94. I show you a Patent Office copy of the Liddell patent, No. 558,969, granted April 28, 1896, and applied for February 6, 1896; and also a Patent Office copy of the Liddell patent, No. 564,288, applied for January 21, 1896, and granted July 21, 1896; both of which patents appear to have been granted to the Eastern Paper Bag Company, as your assignee, for improvements in paper bag machines; and I ask you to state whether you executed the applications for those two patents, some time in January, 1896?

A. To the best of my recollection, I executed both of these applications, in January. I think one must have been delayed at Mr. Hunter's office.

Q. 95. Which of those applications was prepared by Mr. Hunter, as you understand, with more or less conformity to that plan of yours which you had presented to him, and which you have described in this deposition, and have identified with the Liddell Drawing, No. 1?

A. I don't remember explaining to Mr. Hunter, the details and general construction of either application.

Q. 96. I call your attention particularly, to the Liddell

patent, No. 558,969, and particularly to figure 1, of the drawings of that patent, and I ask you to state whether you now fully understand that figure of those drawings?

A. Yes, I think I understand the means of operating this drawing.

Q. 97. I call your attention to the fact that according to the Liddell patent, No. 558,969, the arm F, and the arm F′, are to be rocked upon the shaft f, by means of the cam K′; and I also call your attention to the fact that the gear M′, is to be rocked upon the shaft f, by means of the cam K, through the rod k, and through the link k^2, and through the arm connecting that link with the gear M′. And I ask you to state who it was that contrived the cam K, and the rod k, and the link k^2, as a means for rocking the gear M′, and through that gear, rocking also the upper gear M, and the lower gear M, and the gear N, and through the rocking of the gear N, to make the forming plate E oscillate on the shaft e, backward and forward somewhat like a pendulum?

Objected to as the sworn affidavit of the witness on file in the United States Patent Office, in connection with this application, therein filed, is an affidavit that William Liddell, this witness, was the inventor of that construction; and as this patent referred to, being the patent in suit, herein, was assigned by William Liddell under contract to the Eastern Paper Bag Company, complainant herein, in view of the affidavit so made, and the papers so verified, and the witness is hereby specifically notified on the record of that situation, and warned against putting himself in the position of a perjurer in connection with the present case.

Mr. Walker states to the court, that he believes that complainant's counsel knows very well, that the fact, if it be a fact, that the witness has heretofore made an affidavit upon the subject involved in the question, does not make that question inadmissible. And Mr. Walker calls the

1486

attention of the court to the fact that the objection can have no legitimate significance whatever, and was evidently put into the record for no other purpose whatever, than to threaten the witness with a prosecution for perjury, if his answer turns out to be inconsistent with the affidavit on file in the Patent Office. And Mr. Walker states to the witness, that it is his duty to tell the truth in answer to Q. 97; whether or not he was tricked and deceived, in January, 1896, into signing and swearing to an untrue affidavit upon the subject inquired of. And Mr. Walker assures the witness, that if he will answer all the questions put to him in this deposition, carefully and truthfully, regardless of the threats of complainant's counsel, he will be commending himself to the court as a brave and honest man.

Complainant's counsel has merely desired to suggest, that in view of the affidavit and original papers on file, in view of the lapse of seven years since the recurrence, and in view of the appearance of the witness, Liddell, on the stand to destroy the patent which he swore to, sold and assigned to the complainant, he will do well to be exceedingly careful in the sworn testimony he is at present giving under the employment of the defendant, and under the call and questions of their counsel. This warning is in the interest of the witness, as much as the interest of complainant.

Mr. Walker states to the Court, that he expects to prove hereafter, that one of the complainant's attorneys now present in this room, is the man who was to blame for the affidavit which was filed by the witness in the Patent Office, in connection with this application ; and that the witness was not to blame in connection with that affidavit, otherwise than in confiding in complainant's attorney, to such an extent, as to be misled by him, into signing some papers, and making a formal oath, without personally knowing what he was signing and swearing to ; if indeed

the witness was to blame at all in connection with the said affidavit, which at present is very doubtful. Mr. Walker states to the court, that this whole subject will be thoroughly explained in the record of this case ; and he submits to the court, that the conduct of complainant's counsel, in desperately endeavoring to intimidate this witness, in respect of Q. 97, and thereby preventing him, if possible, from telling the truth, in response to that question, was highly unprofessional conduct which, if committed in the presence of the court, would have been immediately punishable by an attachment for contempt.

Complainant's counsel states that Mr. Walker's last statement of fact and law is without foundation.

A. To the nearest of my recollection, the sketches I took to Mr. Hunter's office were very rough and incomplete. I was hurried so that I had no time to complete them. And I would judge after I had explained to the draftsman the construction of what I meant it to be, and showed it to be; he mistook the obliptic gears, for a cam to oscillate the forming-plate backwards and forwards. I have no recollection of making any sketch of this construction or taking it to him. I may have made such in the first stages of roughing it out; but what makes me positive, and to a certain extent sure, that the sketches that I took to him showed the plate revolving continuously, by means of obliptic gears and operating in conjunction with the cylinder and other parts. I further state that in contriving and working out a machine of this character a man is liable to conceive of various ways of operating the various movements. Although I still believe that the sketches that I took to Philadelphia, and explained to the draftsman, was according to the construction of Liddell Drawing, No. 1, as near as I can remember.

Q. 98. Am I right in understanding you to explain in your last answer, that the draftsman who made the drawings of the Liddell patent, No. 558,969 departed from the

1488

plan which you showed to Mr. Hunter, in those respects in which figure 1 of the Liddell patent, No. 558,969 differs from Liddell Drawing, No. 1? I put this question in this form for the purpose of brevity in the question. But I ask you not to be influenced at all by my form of statement, but simply tell how it happened, as you understand, that figure 1 of the Liddell patent, No. 558,969 came to differ from the sketches and drawings which you had taken to Mr. Hunter and which you have testified were like Liddell Drawing, No. 1?

Question objected to as leading; admittedly so by the last clause thereof, and very improper considering the character of the witness, surrounding circumstances, and last previous answer.

Mr. Walker states to the court that he desires only to secure from this witness statements of the truth, the whole truth, and nothing but the truth; and that he believes the first sentence of Q. 98 is simply and truly a condensation of what the witness said in reply to Q. 97; but inasmuch as the question has been objected to as leading, it is withdrawn, and inasmuch as the time for adjournment has come, Mr. Walker suggests an adjournment until to-morrow at 11 o'clock. And Mr Walker asks the witness to refrain from talking with anybody about the case, during the time of the adjournment; but to be prepared, as well as possible, with a refreshed recollection to-morrow, to fully and clearly answer every question that may be put to him, by counsel on either side when on the stand.

Complainant's counsel strongly objects to the method of procedure adopted by defendant's counsel, asking a leading question, prompting the witness thereby, and then withdrawing it, and taking an adjournment, with such a request to the witness as the record above shows.

Mr. Walker states to the court that complainant's counsel himself called for an adjournment before Q. 98 was put; but that inasmuch as he now prefers to go on

with the deposition, defendant's counsel will put another question.

Mr. Betts says that he does very much prefer that a proper question, if possible, covering the specific matter referred to, should be put and answered before the adjournment.

Q. 99. How did it happen, as you understand, that figure 1, of the Liddell patent, No. 558,969, came to differ from sketches and drawings which you had taken to Mr. Hunter, and which you have testified were like Liddell Drawing, No. 1?

A. As I have before stated, the sketches and drawings that I took to Mr Hunter's office, (that either he, the draftsman, or I, carried to the draftsman's office,) was very hurriedly done, and very incomplete, and it was quite possible, and probable, that the draftsman misconstrued the obliptic gears, or one of the obliptic gears, for a cam; and having no further instructions, as far as I know, in reference to making the drawings, he probably thought that I meant the forming-plate to oscillate in the way the patent appears.

Adjourned until Tuesday, March 17, 1903, at 11 o'clock A. M.

Tuesday, March 17, 1903, 11 o'clock A.M. Met pursuant to adjournment; counsel present as before.

Q. 100. When you called at Mr. Hunter's office, in the early part of January, 1896, in response to a letter informing you that the application papers were ready to execute, did you find Mr. Hunter in his office?

A. I found one of the Messrs. Hunter, I couldn't say which.

Q. 101. The specification of the Liddell patent, No. 558,969, appears to have been witnessed by R. M. Hunter, and by Ernest Howard Hunter; and the drawing of that

patent, appears to have been signed by R. M. Hunter, as your attorney ; and the oath which was filed with the other application papers appears to have been sworn to by you, before Ernest Howard Hunter, Notary Public. Now, I ask you whether you saw both the Hunters, on that occasion ; or whether you saw only the one who administered the oath to you ?

A. On that occasion, when I executed the papers, for these applications, I will say that Mr. Hunter had either two or three rooms in his office, and there was quite a number of gentlemen present, out and in from one room to the other, while I was executing the papers. I haven't the least doubt, but Mr. Hunter's brother, himself and the witnesses that signed these applications, and I haven't the least doubt that they were all present, and in all probability became witnesses to the applications in my presence. The reason that I can't testify to the fact that I seen them sign those applications, was I was engaged in talking to Mr. Haverstick at that time.

Q. 102. Was one of the Hunters present in this office, during your testimony yesterday ?

A. In reference to that; I couldn't swear whether this was the Mr. Hunter that was here yesterday, that was present when I signed the applications, or whether it was his brother that was present when I executed the papers.

Q. 103. Do you know the difference between R. M. Hunter and Ernest Howard Hunter, so as to be able to tell which is which, when you see one of them, without seeing the other ?

A. That was just the addition what I was going to add to the last question. I hadn't seen either of the Hunters but once to my recollection ; previous to signing and executing the papers. And I could not tell the one from the other, to-day, or then ; for I paid no particular attention to Mr. Hunter, the principal, as I understand, or his brother.

Q. 104. Do you know which of the two brothers it was, who was present here yesterday?

A. I do not.

Q. 105. About how long did you remain in Mr. Hunter's office on that occasion, early in January, 1896, when you executed the application papers for the Liddell patent, No. 558,969, of April 28, 1896?

A. To the nearest of my recollection, it might have been from five to fifteen minutes. The most of the time that I was present there, was taken up in conversing with Mr. Haverstick.

Q. 106. Did anybody show you on that occasion, any drawings whatever?

A. I have no recollection of seeing any drawings pertaining to this application at that time.

Q. 107. The specification of the Liddell patent, No. 558,969, of April 28, 1896, contains over four thousand words, as I count and estimate them; and I calculate that that specification cannot be read through aloud, intelligently, in less than half an hour; but however this may be, I ask you to state whether any specification was read to you, on that occasion, or was read through by you, on that occasion, before you signed it?

A. To the best of my recollection, I have no remembrance of the specification being read to me. I think it was simply handed me to read. I remember looking over the first page casually, and supposing that to be all right, and as I had no further interest, neither financially or otherwise; I did not thoroughly look it over, or understand the contents of the specification

Q. 108. Did you ever receive any money or anything, for assigning the application for the Liddell patent, No. 558,969, of April 28, 1896, to the Eastern Paper Bag Company; in addition to the monthly wages which you received from that Company, for the work you did for it, under the contract made at the Astor House Conference in 1893?

A. No. It was distinctly understood according to our contract, that I was to assign all and any ideas and inventions that I might conceive during the time that I was employed by the Eastern Paper Bag Company.

Q. 109. How much were your monthly wages under that contract?

A. Two hundred and eight dollars a month.

Q. 110. Did you pay Mr. Hunter anything, or did you pay anybody anything, for preparing the specification, or the drawing for the Liddell patent, No. 558,969, or for soliciting that patent from the Patent Office?

A. I did not. The Company paid all expenses, in reference to obtaining the patent; and the development of the machine.

Q. 111. What machine do you refer to in saying that the Company paid all the expenses of its development?

A. I mean the original Purvis machine, that I reconstructed, which I started in 1893, and worked upon it more or less for two years.

Q. 112. When did you first have your attention called to the following mechanism which appears in figure 1 of the Liddell patent, No. 558,969, namely, the cam K, the rod k, the link k^2, and the arm connecting that link with the gear M', and which mechanism is stated in the Liddell patent, to be intended to rock the gear M', and through that rocking, and through the intermediate gears M, M, to rock the gear N, and to oscillate the forming-plate E?

A. Will I be allowed to explain it in my own way. Or to answer the question briefly?

Q. 113. Please first to state when it was that you first had your attention called to that mechanism; and afterward please to add any statement or explanation which you think proper to make?

Complainant's counsel objects to the above question, as tending to mislead the witness and suggest to him, the

form of his answer; the witness being at perfect liberty to answer the question in any responsive way he sees fit.

A. The first real knowledge that I had of the description of the patent as issued, was in the early part of this year, January. And my attention was called to a certain model which was showed me in this office. I have never paid any particular attention to the construction of this machine, from the time it was issued, or have had any occasion to devote my time or attention before that time, never being asked by the Eastern Paper Bag Company to examine it, and see if it was right, and all details. I supposed it was right, according to the ideas and papers that I sketched out, or as near that as possible. I didn't consider it necessary for me to devote any time, till some occasion necessitated the same. I have never had an occasion till this time, or about this time, and I didn't fairly investigate the same.

Q. 114. Who showed you the model in this office, last January to which you refer in your last answer?

A. Mr. Walker.

Q. 115. Please to look at the model I now show you, and state whether that is the same model that I showed you last January, and to which you now refer?

A. Yes, this seems to be the same model which you showed me at that time.

Mr. Walker offers in evidence the model last shown to the witness, and requests that it be marked, "Defendant's Exhibit, Model of Liddell patent, No. 558,969" and it is accordingly so marked.

Q. 116. When I showed you this model, of the Liddell patent, No. 558,969, in January, 1903; was the structure thereof, substantially new to you, so that you had to study it a little while before you understood it fully?

Objected to as leading.

A. Oh, yes. I had to study it a minute or two. Being of a simple character, and I being familiar with this line of the art, I could see it very quickly.

Q. 117. During what years, since 1895, have you been retained, employed, or paid by the Eastern Paper Bag Company?

A. I was employed in the year 1893, and 1894, a good part of the time. From October, 1895, till October, 1896, I had a written contract with the Company, as far as salary is concerned.

Q. 118. During what time, if any, since October, 1896, were you retained or employed, or paid by the Eastern Paper Bag Company?

A. I think that's a private matter. Am I compelled to answer that question?

Q. 119. I do not wish to pry into your private affairs; but I do think it material for you to state the fact in response to Q. 118, in a general way, without going into details. Please, therefore, to state whether you were employed by the Eastern Paper Bag Company, or retained by it, at any time, since October, 1896, and if so, during what period, or periods?

A. During 1900, 1901, 1902, I received a small retainer from Mr. Coburn. I think the little agreement is between him and I only, as no company was signed to the written document, as I remember, and our contract expired first of this year.

Q. 120. Was that the same Mr. Coburn with whom you made the contract at the Astor House, in 1893?

A. Yes, it was the same Mr. Coburn; and I understood him to represent one of the Eastern Paper Bag Company officers.

Q. 121. Did you ever understand that Mr. Coburn was the president of the Eastern Paper Bag Company?

A. Yes, I did. He told me so on several occasions.

Q. 122. Do you understand that he was the president of that company, in 1900, 1901 and 1902?

A. Yes, I believed him to be such, from interviews I had, and his correspondence.

Q. 123. How long have you known Herman Elsas, of this city, who is now president of the Continental Paper Bag Company, and who was formerly president of the Elsas Paper Company?

A. As near as I can remember now, about thirteen or fourteen years, since I knew him first.

Q. 124. Did you ever have any conversation with Mr. Elsas about testifying in this case?

A. I did not.

Q. 125. Did you ever have any conversation with Mr. Elsas about the Liddell patent, No. 558,969, of April 28, 1896?

A. Well, probably a year or more ago, I was in the habit of calling upon Mr. Elsas, at Mr. Coburn's request, and have done so a great many times, during the last three years, and Mr. Elsas may have spoken then, with reference to that patent, but I don't remember anything of importance being said in reference to the same.

Q. 126. When, if ever, did you have any conversation during the years 1901, 1902 or 1903, with Mr. Elsas, in which the Liddell Patent, No. 558,969, of April 28, 1896, was mentioned, at all?

A. I have no recollection of any particular dates; but I was in the habit of calling upon Mr. Elsas during these three years, at the request of Mr. Coburn, a great many times, and Mr. Elsas voluntarily showed me a photograph and cuts of the Continental paper bag machines, also the photograph of the factory in Maine, and he explained the general details, which I brought and explained to Mr. Coburn, as the thing progressed from time to time; and I also went there once or twice specially during these three years to see if the Continental Company wouldn't buy out certain machines with patents, that the Eastern Company had. I supposed I would get some commission for the same. Mr. Coburn afterwards told me that Mr. Elsas had called upon him, in Boston, as I had requested him to, for

1496

the purpose of talking over the purchase of these machines. And I also explained to Mr. Elsas that the machines in Philadelphia, which I had had reference to him buying from the Eastern Company were represented to be good machines, and the general particulars; and after that I had reconstructed it, I took it to a mill in Morristown, and there run it steadily about two weeks, which I told him, that the bags seemed to be satisfactory to the parties interested, and to all appearances the machine done perfect work.

Q. 127. Have you ever had any conversation about the origin of the Liddell patent, No. 558,969, of April 28, 1896, with any person connected with the Continental Paper Bag Company, except Albert H. Walker?

A. I have not, according to or about the construction of the patent.

The only other person that I have any recollection of that I talked about the construction was Mr. Ward, while he was building the model to represent said machine. I was requested by Mr. Coburn to call and see how he was getting along. I did call one day, and had to wait for quite a while for Mr. Ward to come in, and I had but a little time to spare; and he called my attention to the impossibility of drawing the bottom in shape, without a movable gripper, or some equivalent, to hold the paper at that particular end while the bottom was being formed. I told Mr. Ward that, in my experience, he would never be able to form the bottom perfectly without having the gripper to seize the paper in place of a stationary tongue, above the paper, not touching a hold of the bag, and such a tongue was useless; and I asked him if that was made according to the patent. He said yes. I told him if that was so, that the draftsman who drew up the drawing must not have understood the sketches I made and gave him. Mr. Ward said that he thought I was right, that the bottom could not be drawn into shape without a movable gripper

holding and clamping the paper, while the bottom was being formed. He also told me that he had to make some alterations at request of counsel, so that the model would be identically the same as the Patent Office drawings. I said I suppose that is right,as we can't differ from what the Office had granted. And I repeated several times, the necessity of the gripper clamping the paper, while the bottom of the bag was being formed ; and I repeatedly said if that is what the patent shows, it isn't what I meant, or intended it to be, because my years of experience in constructing various machines of this character, has proven to me the necessity of both ends of the bottom being held securely while the fingers would enter the bellows sides of the bag, manipulates their function. The most of the time, that I was there, it might have been twenty or thirty minutes, I devoted the most of this time to examining the particular construction of the Continental bag machine model, as it was entirely new to me, and I was interested to thoroughly understand the construction of it. So on that account, I paid very little attention to the model of the Liddell patent, thinking I knew all there was about it. I don't at this time, (while it was being turned over once or twice, that is the Liddell model,) remember now, whether the forming-plate of said model oscillated, or had a continuous revolution, as my attention was taken up with the grippers ; and devoted most of my time to looking at the patent drawings, with the exception of the time that I investigated the Continental model.

Complainant's counsel desires to call the special attention of the court, to the fact that the information so fully and freely given on the record, by the witness, in the last answer, was obtained by him, when he was under the retainer of the complainant, in this case, in a confidential way, the model referred to, never having been produced or offered in this case, and now that the witness, Liddell,

has been bought by the Continental Company, for the purpose of swearing to the invalidity of his own patent, which he sold to the complainant, it is still suggested to him, that he can fill that contract without revealing matters of professional secrecy, the knowledge of which he obtained while under retainer of the complainant.

Mr. Walker suggests to the Court, that Mr. Liddell, the present witness, is not an attorney and counsellor at law, but only a machinist; and that the law of confidential communications and the privilege thereof, which relates to attorneys and counsellors at law, has no application to machinists. And Mr. Walker denounces as utterly false, the statement that the witness, Liddell, has been bought by the Continental Company, for the purpose of swearing to anything; the fact being that no one connected with the Continental Bag Company, has ever had any conversation, correspondence, or understanding with the witness, Liddell, relevant to swearing to anything, or giving any testimony, except Mr. Walker himself; and Mr. Walker proposing to prove by this witness, in the direct examination, exactly what compensation, he has been promised by Mr. Walker, for his time, in giving testimony on behalf of the defendant in this case. And Mr. Walker states to Mr. Betts, that he will not willingly submit to be charged, or to have the witness charged, with bribery or perjury, in this case; the fact being that the case has been managed on behalf of the defendant, with scrupulous care to avoid wrong-doing, and to avoid the appearance of wrong-doing; and there being no foundation whatever in fact, upon which to charge that the witness, Liddell, has been bought by the Continental Company for the purpose of swearing to anything.

And Mr. Walker calls the attention of the court to the absurdity of Mr. Betts' statement, that Mr. Liddell sold the Liddell patent, No. 558,969, to the complainant; the

fact being as Mr. Betts well knows, that Mr. Liddell simply assigned to the complainant, several inventions which he supposed himself to have at least partly made, while he was working for the complainant, at monthly wages, in perfecting the Purvis machine, and made that assignment without any pay therefor, aside from those monthly wages, and without any actual or implied guarantee that the assignment covered anything of any value.

Mr. Walker further states to the court, that he had no knowledge beforehand, that the witness was going to make in reply to Q. 127, the long statement which he did make, about Mr. Ward, and his conference with Mr. Ward. And Mr. Walker states that he would have checked and prevented the making of that statement, if it had not been that Mr. Betts inserted in the record, immediately after the answer to Q. 51, a special request to Mr. Walker, not to interrupt the answers of the witness while they were being given and taken down by the typewriter.

Mr. Walker states to the court that he is taking this deposition with the utmost fairness of which he is capable; and that if the court could be present and observe the conduct of Mr. Betts it would probably appear to the court, as it certainly appears to Mr. Walker, that that conduct is particularly unfair, in many ways which do not appear upon the record.

Mr. Walker regrets that Mr. Betts will so far disregard professional propriety as to insert in a deposition, without the slightest excuse or foundation in fact, a charge of bribery against the defendant and against the witness, and an implied charge of perjury against the witness, and of subornation of perjury against the defendant or the defendant's attorney. And Mr. Walker submits to the court that no gentleman of honor can be blamed for expressing resentment in such a case.

Mr. Betts disclaims the responsibility for the language which Mr. Walker pleases to use in connection with this

matter. He has his own ideas about the transaction, which have not been placed upon the record and probably do not belong there. Defendant is probably entitled, having retained Mr. Liddell, to use him to the utmost to which he is willing to testify. The record as finally made, and in which complainant's rebuttal may play a considerable part, will enable the court to decide on the character of the transaction, and will effect to give the evidence in this case.

Mr. Walker asks Mr. Betts whether he will hereafter withhold unsworn charges of bribery and perjury, or other wrongdoing, from the record, with the understanding that he shall have every opportunity known to the law, for taking legal evidence to prove the reality of such wrongdoing, if any such wrongdoing has occurred or shall have occurred.

Complainant's counsel has nothing more to say.

Q. 128. You have given an account in this deposition, of the origin of the Liddell patent, No. 558,969, of April 28, 1896, as far as that origin was known to you, including your two visits to Mr. Hunter's office, in connection with the application for that patent. Now please to state whether you ever had any conversation about that origin including those two visits, with any person connected with the Continental Paper Bag Company, except Albert H. Walker?

A. None in connection with the Continental Paper Bag Company.

Q. 129. Did you ever have any conversation (about any testimony you might give, or had given, or would give, or would not give, in this case, or in any case, relevant to the Liddell patent, No. 558,969, of April 28, 1896) with anybody connected with the Continental Paper Bag Company, except Albert H. Walker?

A. I had no conversation with anybody connected with the Continental Paper Bag Company, or any one else, in

reference to the question asked, other than Mr. Walker; simply because I never thought or suspected that I would be called in this case, and never expected to have it necessary for me to sign an affidavit, or a drawing in this case. If I would be allowed by counsel on both sides, to explain how I came to sign this affidavit, and drawing, in connection with it, I think I could fully and clearly explain my entire innocence in this case; that is as far as the signing of the affidavit and the drawing attached thereto, is concerned.

Q. 130. Please to begin your explanation by stating as near as you can, when it was that you came to this office, and first told Mr. Walker about your two visits to Mr. Hunter, in connection with the application for the Liddell patent, No. 558,969, of April 28, 1896?

A. As near as I can recollect, it was the early part of January this year, 1903.

Q. 131. Now please to go on in your own way, and tell what occurred and was said, at that interview, with Mr. Walker, and at the later interviews which occurred with him, and with Mr. King, down to and including Monday evening, February 2, 1903, when you signed and swore to your affidavit, in this case, and signed the drawing which was attached to that affidavit?

A. If I am allowed I will explain this answer to the question, as fully as I know how; and as clearly and distinctly so that all present may understand it, from my first visit to Mr. Walker up to date.

In the latter part of the year 1902, I think about December 27 or 28, I got a letter from Mr. Walker. I presume he got my address from Mr. Elsas, as Mr. Elsas had my address, for a great many years. On that particular visit, which was the first I believe, that I ever had with Mr. Walker, I made up my mind, before coming here, to hear all that was said, and say nothing; simply because I was in honor bound to work in the interests of the Eastern

1502

Paper Bag Company. After I had been here a short time, and talked over things in a general way, he finally asked me some questions about dates, etc., in reference to the patent in suit, No. 558,969; and after listening to him, some little time, I finally told him, that I would rather not answer any question at that time. He seemed surprised, and asked me why. I finally, after thinking a little, told him I was in honor bound to assist the other side ; as I knew there was a suit pending, in reference to this patent, No. 558,969 ; and I furthermore told him that it was in the shape of a retainer, but would expire the first of 1903, and after that, if I wasn't retained further by the Eastern Paper Bag Company, I would be willing to testify to the truth in every respect, in regard to this case, as far as I knew. And I would just as willingly and voluntarily give my evidence to the other side, if I was requested to do so. I might state further, about that time, the third or fourth of January, 1903, that Mr. Coburn sent me a letter to my house, to meet him at the Fifth Avenue Hotel. I didn't do so the same day, as he requested me ; but sent a dispatch, that I would meet him the following day at 1:30 o'clock. And I did meet him, and we had a sociable conversation, as we usually do, when we meet, and Mr. Coburn asked me if I received his last letter. I told him I thought I did. He asked me did I receive a letter stating that he wanted to renew our contract. I told him I did not see any such letter, and I should certainly have seen it if it had been sent to me. He further stated, "Are you situated now to extend that contract?" I told him I was not; that I had already made a contract, the first of the year, 1903 ; and he inquired of me the nature of the contract, and after some talk, I voluntarily told him that I had engaged myself to the Continental Paper Bag Company. He made the remark that he thought that might be a good thing, for me. I said I hope it would. And we chatted probably fifteen minutes, after that, then we had

a refreshment, and a cigar, and we parted, and I haven't seen Mr. Coburn, neither have I heard from him since. If I am allowed, by counsel on both sides, to explain how I came to sign this affidavit, and drawing, and to testify in this case (I rather think I have explained that). About the latter part of December, 1902, I called upon Mr. Walker, at his request, and explained the reasons, why I couldn't give any information to him in reference to this patent, No. 558,969. So I didn't hear from Mr. Walker, again, till the early part of January, 1903. He sent a letter for me to call to see him, and I had no knowledge directly or indirectly, what he wanted of me. This was in the evening after five o'clock; because that was the only hour that I could well spare. At that interview, he asked me certain questions in relation to said patent, No. 558,969; and I voluntarily answered his questions, such as they were, without thinking or surmising that ever I would be called into this case, never suspecting that he was memorizing any answers I was giving him. I finally got another letter a short time afterwards, requesting me to call, at Mr. Walker's office, and I did so, at the same hour, five o'clock. He said that he had drawn up an affidavit in reference to what I had told him, and I was rather surprised; but stated that I was willing to testify to the truth, in every detail, as far as I knew in reference to this case; and I may say I would as willingly have testified to the truth as far as I knew, had the other side called upon me.

Q. 132. When in the course of your interviews with Mr. Walker, was anything said between you and him, about paying you for the time you had occupied in visiting his office, and in consulting with him about your affidavit, and in considering the affidavit, yourself; and also for any time you might be called upon to give for the purpose of making a deposition in this case; and also for the time you were employed in showing Mr. King how to make the Liddell Drawing, No. 1?

A. As near as I can remember, the time that any remark was made, by Mr. Walker, in reference to any compensation that I might get, for what I had done, and would probably have to do, in this case, he would attend to paying me; or words to that effect.

Q. 133. Did Mr. Walker tell you that he would himself pay you, for your time; or did he tell you that the Continental Paper Bag Company would pay you?

A. He told me distinctly that he would pay me for my time and services, whatever it may be, in this case; and the Continental Company had nothing to do with the paying of me for this work; for I should look to him for my pay.

Q. 134. Did this conversation with Mr. Walker occur before or did it occur after you made your affidavit in this case, and signed the Liddell Drawing, No. 1, on February 2, 1903?

A. I am inclined to think that was after the signing of the affidavit and the drawing; simply because I thought I had done little or nothing in reference to the case previous to that time.

Q. 135. State at what rate Mr. Walker promised to pay you for the time you had given, and for the time you would give to the case, and state how that particular rate of payment was arrived at between you?

A. Mr. Walker stated to me, after I had told him what my services were worth in the market, that he would give me eight dollars a day for any time that I might spend in this case.

Q. 136. Has Mr. Walker yet paid you any money whatever, in pursuance of his promise to pay you eight dollars a day?

A. He hasn't yet paid me one penny.

Q. 137. Have you any understanding or arrangement with anybody for any payment for your time or services in this case, aside from that promise made by Mr. Walker,

to pay you eight dollars a day for that time and for those services?

A. I haven't any promise from any party or parties for any money or consideration in any shape or form, other than that which is stated by Mr. Walker, that he would pay me for my services in this case.

Q. 138. I now show you what purports to be a copy of a contract dated December 29, 1902, between the Continental Paper Bag Company, and yourself, which contract contains four articles; the first of which provides that you will work for the Continental Paper Bag Company, as a mechanical engineer, and make working drawings for paper bag machinery, and superintend the construction of paper bag machinery, during the period of eight months, beginning with the first of January, 1903, and ending August 31, 1903; and the second of which articles, specifies the amount of money you are to receive for that work; and the third of which articles gives the Continental Paper Bag Company, an option to renew the contract for one year, beginning September 1, 1903; and the fourth of which articles specifies the kind of work you are to do for the Company, in the event of a renewal of the contract. Now please to look at the paper I show you, and state whether you recognize it as a true copy of the contract which you made with the Continental Paper Bag Company, December 29, 1902, and of which you informed Mr. Coburn early in January, 1903?

Objected to as incompetent, not a proper method of proving a copy; the original is not produced for comparison or inspection.

A. This seems to me to be a true copy of the contract that I now hold with the Continental Paper Bag Company.

Q. 139. Will you please to bring that contract here tomorrow, so that it can be shown to Mr. Betts, and compared with this copy?

A. I will.

Q. 140. Now, Mr. Liddell, when you made that contract

with the Continental Paper Bag Company, did you have the slightest idea that the Continental Paper Bag Company wanted or would ever want to take any testimony from you in this case, or in any case?

Objected to as leading.

A. In answer to the question, I would say that I had no knowledge at the time I signed the contract with the Continental Paper Bag Company that I would ever be called upon to sign an affidavit or testify in this case; simply because when I signed the contract it was the latter part of the year 1902, and at that time I had no knowledge whatsoever that I would ever be called into the case in any shape or form.

Q. 141. Did Mr. Elsas or did anyone connected with the Continental Paper Bag Company, ever ask you to do anything under that contract, or for the wages mentioned in that contract, aside from the work which the contract itself describes?

Objected to as leading.

A. No, nothing whatever.

Q. 142. Do you remember that when Mr. Walker promised to pay you eight dollars a day for your time and services in this case, he told you that that promise was entirely distinct from that contract of December 29, 1902, and that you were not to be influenced at all in this case, by the fact that you had that contract with the Continental Paper Bag Company?

Objected to as leading.

A. Mr. Walker at that time told me distinctly several times, that this eight dollars a day should be paid in addition to what the contract calls for; and told me distinctly that he would pay me himself, personally, for my services in this case.

Q. 143. What did Mr. Walker say to you about the contract having nothing to do with this case?

Objected to as leading.

A. Mr. Walker explained to me that I should understand distinctly that the money that I was to get, that is, this eight dollars a day for my services in this case, should have no relation whatever, and should be entirely distinct and separate, from the money paid me by the contract that I had with the Continental Paper Bag Company.

Q. 144. Now, please to carry your mind back to the year 1896, and state when next it was, that you saw or heard anything about the Liddell patent, No. 558,969, after you executed the application for that patent, in Mr. Hunter's office, in the early part of January, 1896?

A. In the year 1896, I was in the habit of taking the *Scientific American*; and I think it was in the spring of the year, 1896, I seen an announcement in that paper, of a patent being granted which I recognized as mine.

Q. 145. What did the *Scientific American* say about the character of that patent, or the name of the applicant therefor, which enabled you to recognize the statement as applying to this patent, No. 558,969?

A. As far as I am aware, the *Scientific American* paper gives no description of patents, other than giving the dates, name, and number, unless especially paid for such.

Q. 146. Did that note in the *Scientific American* simply state that patent, No. 558,969, had been granted in the name of William Liddell, on a paper bag machine, April 28, 1896; or if not, then state as well as you can, what the *Scientific American* did say about that patent?

Objected to as leading and incompetent, and not calling for the best evidence.

A. I simply recognized it, by running my eye down the columns of patents allowed, or granted, and recognized my name, as the inventor of one of these patents allowed.

Q. 147. When did you first see any copy (or the original if you ever saw the original) of the Liddell patent, No. 558,969, of April 28, 1896?

A. I never saw the original that I know of. The first

copy that I ever saw, of the patent referred to, as near as I can recollect, Mr. Coburn gave to me, either at the Fifth Avenue Hotel, or he mailed it to me at my house, that is perhaps in the neighborhood of a year or fifteen months ago. I put it in my pocket, and had it for some days there, without looking at it, and finally, put it in my desk, and didn't take interest enough for to read it and examine it; as I always think it's time enough to investigate things when occasion requires.

Q. 147½. Did you ever really understand the Liddell patent, No. 558,969, of April 28, 1896, until you and I examined it together in January, 1903, at the time I showed you the model which you identified in response to Q. 115, and which is marked "Defendant's Exhibit, Model of Liddell patent, No. 558,969"?

Objected to as leading.

A. As I have formerly testified, in this case, I didn't fully understand the construction and details of this patent, No. 558,969, till that time; simply because I had no occasion and no one requested me to examine it, and I supposing all along, from the issue of the patent, up till that time, that the patent was granted somewhat correctly according to the sketches and drawings that I took to Mr. Hunter's office in Philadelphia.

Q. 148. What became of those drawings and sketches as far as you know?

A. The drawings and sketches that Mr. Hunter made Patent Office drawings from, that I made and delivered, to him, were repeatedly sent for. At Mr. Coburn's request, I wrote several letters to Mr Hunter, asking them to find the original sketches which I had left for the purpose of making drawings, for the application in this case. Mr. Coburn told me that he had also written to Mr. Hunter, for these sketches and so forth. After I had written to Mr. Hunter, several times, requesting him to find them, he said he would make a more diligent search, and finally

in the last of his letters, he told me that he couldn't find them; so that ended it, as far as I know.

Q. 149. Now please to look at "Defendant's Exhibit, Model of Liddell Drawing, No. 1", and also at "Defendant's Exhibit, Model of Liddell patent, No. 558,969" as I place them on the table side by side, before you, and without going into details, or giving any reasons for your opinion, please to state which one of those two plans at present seems to you to be the best one of the two for the purpose of moving the forming-plate E of the Liddell patent, in the way it ought to go, in order to work?

A. If I am allowed to explain as briefly so I can make it clearly understood; my opinion is that Model of Liddell patent, No. 558,969, is a true representation of the Liddell patent, No. 558,969, granted April 28, 1896, in general details. This construction exactly as it is, would be impossible to form a bag bottom of the character that it is meant to make; for the simple reason, without going into details, that this operates the forming-plate I should say, less than a quarter of the distance it would be necessary for it to operate, in order to form a bag bottom of the character this machine is designed for. As far as the cams and the gears are concerned, it would take me some time to understand whether they were perfect for the purpose designed, or not. That is as brief as I can make.

Q. 150. Now please to state whether you think the plan of "Defendant's Exhibit, Model of Liddell Drawing, No. 1", is a better plan, or is a worse plan, than the plan of "Defendant's Exhibit, Model of Liddell patent, No. 558,969"?

A. As far as this model goes, that is as far as it is constructed, being without the cylinder, and other parts that work in conjunction with it, I couldn't give an expert opinion of the same; but as far as it goes, in my opinion, I would consider this a more mechanical constructed device, for the purpose that it is intended for, than the other

model; for one reason, that the forming-plate has a continuous rotary motion, of course, controlled by the eccentric gears; and a rotary motion, in all my experience of mechanics, is preferable to an oscillating motion, when speed is required.

Q. 151. You speak, in your last answer, of the "eccentric gears," in "Defendant's Exhibit, Model of Liddell Drawing, No. 1" and in several of the answers you gave yesterday, you spoke of "obliptic gears". Now please to state whether you used these two names to designate the same two irregular gears of that model; or whether you were referring to a different pair of gears, when you spoke of the eccentric gears, from the pair you had reference to when you spoke of obliptic gears?

A. It is a common thing amongst mechanics, to name a gear that isn't a true circle, either obliptic or eccentric. I refer to the same here, as I did in my testimony yesterday. I might say that all gears that are out of a true circle are not called obliptic, or eccentric. They may go to the extreme and be four square gears, three square gears, and a variety of shapes. But these on this model I would call them either by the name of "obliptic" or "eccentric".

Q. 152. Did you ever know the name of the draftsman, in Philadelphia, to whom Mr. Hunter took you or sent you, for the purpose of having patent office drawings made in the latter part of 1895?

A. I have no recollection of hearing his name mentioned, although it is quite possible and probable that Mr. Hunter introduced him to me, at that time, by his name.

Q. 153. You stated, in reply to Q. 79, that you took home the Liddell Drawing, No. 1, to look it over, along with an affidavit, which you had amended, and afterward returned it to Mr. Walker. Now, please to state whether you amended that affidavit with your own hand, or

whether it was done by someone else under your direction, and if so, by whom?

A. That affidavit referred to, that I had amended, was amended under my directions, by my youngest daughter.

Q. 154. Please to look at the paper I now show you, on eight pages of typewriting, and which appears on most of its pages, to be amended with a pen, and state whose handwriting those pen-made amendments are in?

A. These amendments were made under my instructions, by my youngest daughter, Margaret.

Q. 155. Do you recognize this paper of eight pages as being the original draft of an affidavit which Mr. Walker prepared, and which you took home with you and caused to be amended with a pen by your daughter Margaret?

A. Yes; I recognize it by the contents of it, and also by the handwriting, where the amendments are made.

Mr. Walker offers in evidence the paper thus identified by the witness, and requests that it be marked, "Defendant's Exhibit, Amended Draft of Liddell Affidavit" and it is accordingly so marked.

Q. 156. After this draft of an affidavit had been thus amended, under your direction, by your daughter, Margaret; was that affidavit true according to the best of your knowledge, recollection, and belief?

A. The affidavit was true to the best of my knowledge and belief; otherwise I would never have signed it.

Q. 157. When you brought that original draft for your affidavit back to Mr. Walker, what did he do with it first?

A. I can't state that Mr. Walker done anything with it, further than asking me if I would sign the same.

Q. 158. Do you remember that Mr. Walker read off the amended affidavit to Miss Smith, his typewriter, so as to produce a fair copy thereof, all in typewriting; and that thereupon, he read over that fair copy to you, and you signed it, as your affidavit, without signing the one which had been amended in ink by your daughter?

A. Yes, I remember distinctly of you asking your typewriter to read it over to me, as amended, at that time.

Q. 159. That particular point I want to make plain on the record, is well understood by counsel on both sides; namely: that the copy of the amended affidavit was the paper that was signed by you, and was sent to the court in Portland for a temporary purpose, and is in Portland now; while the amended draft from which that signed copy was made, was kept by Mr. Walker. And I ask you whether that is your understanding?

A. That is my understanding, that the amended copy was the one I signed.

Q. 160. Your signature is not on the draft which your daughter amended, is it?

A. No.

Adjourned until Wednesday, March 18, 1903, at 2 o'clock P. M.

Wednesday, March 18, 1903, 2 o'clock P. M. Met pursuant to adjournment. Present: Mr. S. R. Betts and Mr. Francis T. Chambers, counsel for the complainant, and Albert H. Walker, counsel for the defendant.

Q. 161. Please to produce your contract of December 29, 1902, with the Continental Paper Bag Company?

A. This is it.

Mr. Walker offers in evidence the contract produced by the witness, and by agreement of counsel, a true copy thereof is accepted in the place of the original contract, to be filed in court, and which true copy is marked "Defendant's Exhibit, Liddell Contract of December 29, 1902".

Q. 162. In your answer to Q. 131, you speak of the first time that you ever met Mr. Walker, as being in the latter part of the year 1902, and as being as you then thought, about December 27 or 28. Now, I have looked up my

memoranda and I find that that visit by you, to me, occurred in the latter part of November, 1902, and that the letter which you say I wrote you, asking you to call upon me, on that occasion, was written in the latter part of November, instead of in the latter part of December. I therefore ask you to refresh your recollection on this point, and state again, in the light of that refreshment, when it was, as you now think, that you paid that first visit to Mr. Walker?

A. In answer to the question, I recollect now that it was some time previous, that I first had an interview with Mr. Walker, to the time I before stated, that I met him here in his office, and he asked me certain questions; and this first visit that I made as he says in November, that was the visit that I formerly testified to, that he asked me certain questions in reference to when I first conceived the idea of this construction of a machine, and several other questions in reference to the same; and I declined to answer, for the reason that I was obligated to the Eastern Paper Bag Company, till the first of the following year, which was 1903.

Q. 163. Now, the question is whether that visit occurred in November or occurred in December, 1902. And in order that that date may be fixed with more certainty, I ask you if you still have the letter which you say Mr. Walker wrote you, and in pursuance of which, you made that visit to him?

A. I would say that I believe I still have that letter at home; but can't remember positively whether it was a letter gotten in November, or in the month of December.

Q. 164. Will you please to hunt up that letter, and bring it here to-morrow, so that the date can be fixed?

A. I will bring it here to morrow, if I can find it, and I believe I can.

Q. 165. In your answer to Q. 130, you say that you paid your second visit to Mr. Walker in the early part of

1514

January, 1903. Now, I have looked up my memoranda as to that date, and I find that that visit occurred in the latter part of January, 1903; namely, on the evening of Thursday, January 22, 1903; but in order to establish this date regularly, I will ask you to look up the letter which I wrote you inviting you to make that visit, and to bring that letter with you to-morrow, if you can find it?

A. Yes, I will bring the letter to-morrow, if I can find it.

Q. 166. While you are about it, please also to bring to-morrow, all the letters that you have ever received from Mr. Walker, so that if they should be called for by complainant's counsel, they can be produced immediately?

A. I will.

Direct examination closed.

Cross-examination by Mr. S. R. Betts:

X-Q. 167. You have referred on your direct testimony, to two applications for patents in paper bag machinery; I mean those you have testified about in answers 41 to 49, inclusive, among others, and you have said in answer to Q. 42, referring to those two applications, "The first time that I gave any information as near as I can recollect, was some time in 1895, it might have been the spring, it might have been the summer." To whom did you give that information the first time, in relation to these applications, as you recollect?

A. In answer to that; as near as I can recollect, Mr. Coburn and I talked about the merits of the patents, also the Continental machine patents. There was nothing said as far as I can recollect, in the shape of an explanation of the construction of either patents. The next that I remember of, talking in reference to the same, was to Mr. Ward. I had a short interview with him, and he showed me a copy of the Liddell patent, No. 558,969, and he talked to me and showed me that he couldn't form the

bottom in a perfect shape, by the way he had it constructed. As I have formerly stated, I told him, in my experience in paper bag machines, it was utterly impossible to draw that bottom into the required shape, to make that bag, without a gripper seizing the other end of the paper, or I should say, both ends of the paper, while the fingers that enter the bellows folds, were opening the bag in a a diamond form.

Answer objected to as entirely irresponsive.

X-Q. 168. My last question referred to a period before either of these patents No. 564,288 or No. 558,969, were granted or applied for. You say that the first time you gave any information, as near as you can recollect, to any one by means of which those two applications for those two patents could be prepared "was some time in 1895. It might have been the spring. It might have been the summer." Now to whom did you give such information?

A. In answer to the question; to the best of my recollection, I told Mr. Haverstick in Philadelphia, in the year 1893, that I thought I had a certain idea how I could make a machine for that purpose differing from the Purvis construction. He asked me no questions, in reference to the same. And I explained nothing as far as the construction of the machine: which I simply had in my head at that time. When I afterwards got instructions to make sketches and drawings for the two applications, that I assigned to the Eastern Paper Bag Company, I didn't follow the idea at that time, and a great many details; but made the sketches and drawings as perfectly as I could, mechanically, for the purpose and object they were to be applied to.

X-Q. 169. Well, now to whom did you first show those sketches and drawings embodying your ideas of two different constructions in paper bag machines, for which applications might be made?

A. To the nearest of my recollection, outside of my im-

1516

mediate family when I made the drawings, and sketches in my own house, the only one outside of those, was Mr. Haverstick. I went to Mr. Haverstick's office in Philadelphia, about the time stated, and told him I had the sketches and drawings. He didn't ask to see them; but said: "Let us go to Mr. Hunter's office", and I did so.

X-Q. 170. Then, as I understand you, you first showed to Mr. Haverstick, sketches and drawings you had made embodying your ideas with reference to paper bag machines or machinery, and that this was at Philadelphia, "some time in 1895. It might have been the spring. It might have been the summer." I quote from your answer to Q. 42?

Objected to as out of conformity with the testimony which it purports to represent; and Mr. Walker suggests that this cross-examination ought to be conducted by asking questions, and not by telling the witness what the cross-examiner understands. In this particular case, it is difficult to see how the examiner could understand the direct testimony of the witness as he states in X-Q. 170, he does understand; but however that may be, the understanding of counsel is not evidence, and Mr. Walker objects to the record being encumbered by statements of what complainant's counsel understands.

Complainant's counsel objects to the deliberate prompting of the witness, as by the above objection, and if persisted in, will have this record certified to the court, and a ruling had on that form of prompting a witness, under present circumstances, and during the cross-examination.

Mr. Walker notifies counsel for the complainant, that the latter will not be allowed to mislead this witness, by misstating to him, his direct testimony. And Mr. Walker states to the court, that Mr. Betts refused expressly to allow the witness to read for himself, his answer to Q. 42, when he questioned the witness upon the subject of that answer. Mr. Walker adds that he will refrain from point-

ing out the radical difference between the testimony which the witness gave, in reply to Q. 42, and the representation of that testimony which Mr. Betts made in X-Q. 170; in order to avoid even the appearance of guiding the witness away from the trap which Mr. Betts has laid for him, in X-Q. 170.

Complainant's counsel characterizes the above statement, as an aggravation of the former prompting of the witness; and particularly the last clause thereof, and renews his notice and warning to Mr. Walker, to desist from prompting the witness under the guise of an objection.

Mr. Walker states to Mr. Betts, that it is quite unnecessary to "renew his notice and warning to Mr. Walker"; and that such notices and warnings, however often repeated, will have no influence whatever upon Mr. Walker, who will conduct this case on behalf of the defendant, in accordance with the law, and without the slightest regard to any threats, abuse, libel or defamation that Mr. Betts may insert in the record.

A. In answer to that; I would say that I did not show the sketches or drawings to Mr. Haverstick at that time, and to the nearest of my recollection, he didn't ask to see the same; but suggested to me that we go to Mr. Hunter's office, and we did go, and this was not at the time counsel states. It was what I testified to yesterday, in the latter part of 1895. I think I said it might have been the month of November or October. And if I be permitted to say, I prefer that neither counsel shall assist me in my evidence, as I mean to tell nothing but the truth, and I have no reasons to do otherwise.

Complainant's counsel ventures to point out, as showing in the last answer, the clear effect of Mr. Walker's prompting objections.

X-Q. 171. Well, ow, when was it that you told Mr. Haverstick that you had the sketches and drawings com-

1518

pleted, for the two different constructions of paper bag machines by means of which, two applications could be prepared ?

A. In answer to that ; I would say that during the year 1895, that Mr. Haverstick and I had several letters sent between us, from Philadelphia to Brooklyn, asking me how I was progressing with the sketches and drawings to make drawings for the Patent Office. If I haven't answered the question completely, I will please to do so, if you remind me what I have omitted.

Q. 172. Please remember that I have all this time been referring to sketches and drawings made by you prior to your putting these two applications referred to, into the hands of Mr. Hunter ; and what I want to know is, how long before that, you told Mr. Haverstick you had these sketches and drawings ready so as to start these two applications.

A. In answer to that; I repeat as I formerly stated, that I have no recollection of showing these drawings or sketches or explaining the same to anyone before going to Mr. Hunter's office ; and when I told Mr. Haverstick that I had the sketches and drawings about completed, as near as I can recollect, it was either the month of November or October, 1895.

X-Q. 173. Now if you will kindly pay some attention to my questions, and answer them, your answers will become more responsive. What I asked you was, how long before you took these sketches and drawings to Mr. Hunter's office, in the first instance to start these two applications, for these patents, you had completed them, and told Mr. Haverstick you were ready to start the applications ?

Question objected to as ambiguous, and liable to mislead both the witness and the court.

A. I don't quite understand that question. I hadn't told Mr. Haverstick that I was ready to start applications till I had them finished, or roughly finished, about the

month of November or October. We simply had correspondence during the Fall of that year, in regard to how I was progressing with the said sketches and drawings.

Answer objected to as irresponsive.

X Q. 174. Please answer my question, which you have not yet done. How long before you took those drawings and sketches for these two applications to Mr. Hunter's office, were the sketches and drawings which you did take to him, completed as you took them to him?

A. In answer to that question; I will say that the sketches and drawings as far as they went in reference to completion, were not completed, to the nearest of my recollection, till the night before I took the train to Philadelphia to see Mr. Haverstick, and to take the same to Mr. Hunter's office.

X-Q. 175. Why did you have to take a train to Philadelphia? Were you not there, in connection with your employment, as you have testified on the direct?

A. In answer to that question, as I have formerly testified, I made all these drawings and sketches in my own home in Brooklyn, and no one outside of my immediate family ever seen said sketches and drawings till I took the same to Philadelphia.

X-Q. 176. Well, were you not at Philadelphia in connection with your employment on the Purvis machine, at the time you first took these sketches to Mr. Hunter?

A. I was not. I had been through with the Purvis machine for some months.

X-Q. 177. Did you not continue at Philadelphia after you were through with the Purvis machine?

A. In answer to that; I would say that after I was through with the Purvis machine, I did no work whatsoever for the Eastern Paper Bag Company, till I started these drawings and sketches at my own home in Brooklyn.

X-Q. 178. When was it you got through with the Purvis machine?

A. To the nearest of my recollection, it was some time in the early part of 1895.

X-Q. 179. At the time you first took these drawings and sketches to Mr. Hunter's office, did Mr. Haverstick go with you?

A. Mr. Haverstick and I went to Mr. Hunter's office with the sketches and drawings referred to, to the nearest of my recollection.

X-Q. 180. Which Mr. Hunter did you see then, and there?

A. As I have testified yesterday, I could not recognize one Mr. Hunter from the other. As evidence of that, the day Mr. Hunter was here at recess, I said to Mr. Hunter, "Your face is familiar to me". He said "Yes, I am Mr. Hunter"; and I shook hands with him and excused myself for not recognizing him.

X-Q. 181. It was Mr. Rudolph M. Hunter who was here last Monday. Do you not remember seeing him at his office in connection with these two applications referred to, at some time?

A. Yes, I know that there was one of the Mr. Hunters there; and they might have both been there while I was signing these applications. But as I had only been there once, to my recollection, previous to that; I paid no attention to the appearance of the two brothers. I couldn't distinguish them from each other the next day, because I didn't look at them. They were busy talking to other parties.

X-Q. 182. Referring to the time when you first took the sketches and drawings to Mr. Hunter's office to start these applications; are you able to say which Mr. Hunter you saw, and whether or not you saw both of them at that time?

A. In answer to that; I will say ,as I have just already stated, that they may have both been there, and I couldn't

tell, which of the Hunters that passed the papers to me to sign.

X-Q. 183. Have you any written memoranda of any kind which you can produce, and which will show the exact date when you first went to Mr. Hunter's office in Philadelphia with the sketches and drawings referred to, to start these two applications?

A. I kept no memorandum or anything that would remind me of the exact date when I first went to Mr. Hunter's office with these drawings and sketches referred to.

X-Q. 184. Why may it not have been in September, 1895, instead of in October or November you first went there, as far as you can positively swear?

A. I think that I can explain that very clearly. I had a written contract in the year 1895 with the said Company, and I had it still; and it was during the term of that contract, at the time I have formerly stated, that I made the sketches and drawings and took them to Mr. Hunter's office.

X-Q. 185. Well, how does that show it was not in September instead of in October that you went there?

A. In answer; I would say that I didn't testify that it was in September. I simply stated to the nearest of my recollection, it was in the month of November, or it might have been October.

X-Q. 186. Well, why might it not have been September?

A. My reason for thinking that it was not September, was that I remember that there was a long interval between the time I took the sketches and drawings there till the early part of 1896, when I was requested to come on and sign the applications. That is the only ground of proof that I have for stating that particular time.

X-Q. 187. Well, if you took them there in September, that would be a longer interval than if you took them there in October or November, would it not?

A. In answer to that; it certainly would be longer than the time I stated.

X-Q. 188. Now how long before you made those sketches, which you took to Hunter's office to start these two applications, whenever that was, did you conceive the inventions embodied in those sketches, as near as you can state?

A. In answer; to the nearest of my recollection, I had been thinking over them for a few months during that year. But I never produced anything tangible, or anything in the shape of a drawing, till about the time that I have previously stated; except, as I formerly stated, that in the early part of the year 1893, I told Mr. Haverstick that I thought I had an idea of a machine differing from the Purvis machine for that purpose. But as I have formerly stated, the sketches and drawings that I made in the year 1895, were considerably different, in many of the details, from the idea that I simply had in my head at the time that I stated to Mr. Haverstick that I had such an idea.

X-Q. 189. Well, what was the general idea you stated to Mr. Haverstick, and which was different from the Purvis machine, and which was afterwards embodied in the sketches and drawings which you took to Mr. Hunter, referred to; you may leave out question of details.

A. I would state that I didn't explain or say anything to Mr. Haverstick at that time, in reference to the construction of the idea that I thought of, but to answer the counsel as well as I can, the general construction of the idea that I had conceived at that time, as near as I can remember, is represented somewhat in the patent, No. 564,288. And the drawings, and sketches which I made for the patent in litigation, was the last drawing I made, and it was a very good drawing. If I may be allowed to explain, that sketch or drawing was made full size, and it

necessitated me to pin it on the wall, in one of my rooms upstairs, which I kept for that purpose.

X-Q. 190. Are you able to produce that sketch or drawing which you say you made as above, and took to Mr. Hunter, in connection with the application for the patent in suit?

A. In answer: I would say that as I testified yesterday, Mr. Coburn had several times requested me to write to Mr. Hunter to see if I could get the sketches and drawings referred to. I did so, several times. And had several letters from Mr. Hunter, stating that he would make a search. Also letters stating that he had made a search for the said sketches and drawings; and also another letter stating that he had made a further search. And finally wrote me that he had made a diligent search and couldn't find said drawings and sketches. This was done at Mr. Coburn's request.

X-Q. 191. Have you searched for the said drawings and sketches, which you took to Hunter, in connection with the application for the patent in suit?

A. I have several times searched my cellar, where I keep all such old drawings and sketches, to satisfy my own mind that they had never been returned to me.

X-Q. 192. Then you failed to find those drawings and sketches?

A. I failed to find said drawings and sketches; and I am positive and sure they never were returned to me.

X-Q. 193. Now did you search to find the drawings and sketches which you took to Mr. Hunter in connection with the application for the patent, No. 564,288, and with what result?

A. I searched for the one equally as much as for the other; because I supposed that it was probable that Mr. Hunter returned all at the same time, and I made a diligent search in my house, to find either sketches or drawings of either patent referred to. I might state I did all

this for the benefit and interest of the Eastern Paper Bag Company.

X-Q. 194. Did you not find a sketch or drawing relating to the application for patent, No. 564,288, which I will call the "B" application?

A. Yes, sir. I would say as requested by Mr. Coburn, and at the request of counsel for the Eastern Paper Bag Company, I made a search amongst my old drawings and papers, and found a view of one of the patents, I believe it's patent, 564,288. I think I mailed that or sent it, to Betts, Betts, Sheffield & Betts. But said view of that bag machine, which I sent or mailed to counsel, is no part of any of the papers in the shape of drawings or sketches, that I took to Mr. Hunter's office.

X-Q. 195. How closely did that sketch you sent to Messrs. Betts, Betts, Sheffield & Betts, conform to any drawing of the patent, No. 564,288?

A. Well, it would be almost impossible for me to remember; but I would judge it would be this side elevation view, figure 4. It might be another view, I can't tell.

X-Q. 196. How lately did you see that sketch you sent my firm?

A. I never seen it since I sent it, or mailed it, to your firm.

X-Q. 197. About when was that?

A. I can't exactly tell. It seems to me that it might be almost a year ago, probably more.

X-Q. 198. Please describe that sketch you sent my firm, in detail?

Objected to as calling for secondary evidence, of a sketch which is proved to have lately been in existence, and in the possession of complainant's counsel himself.

A. I would state it would hardly be expected that a man that is sketching and drawing different constructions of things, more or less, all the time, could remember the details. It is so hard to explain it. I am not certain

what view it was, or what part of the machine was shown in the sketch.

X-Q. 199. Can you state in regard to that sketch sent my firm, whether it showed a folding-plate, of any kind; and if so, how such plate was operated? and what it did?

Same objection.

A. I would state as near as I can recollect, there was two beds, I think similar to the patent, No. 564,288; if I had sketched it far enough to show said beds.

X-Q. 200. Is that the best and fullest description you can give of this sketch relating to patent, No. 564,288, which you sent my firm?

A. I can give a full description, as I remember the two beds, opened up and closed, in the formation of the bottom. But I have no reference to the revolving plate shown in patent, in suit.

X-Q. 201. Now, I have not asked you anything about the patent in this suit. Please confine yourself to the sketch you sent to my firm, and describe what that sketch showed, as fully as you remember, giving all details, you can now here recollect?

A. To the nearest of my recollection, that sketch showed just what I have described, two beds, opening and closing, for the purpose of forming the bottom; and this being a sketch that I abandoned, while making drawings and sketches, for the two said applications, I didn't pay much attention or remember what the vi w was particularly. I might say, before mailing it or sending it to Betts, Betts, Sheffield & Betts; I glanced at it, and saw that it was a sketch of a machine of that character, and so mailed it or sent it, to Betts, Betts, Sheffield & Betts.

X-Q. 202. Does that sketch show a forming-plate of any kind?

Objected to as calling for secondary evidence; or if the question is designed merely to test the memory of the witness, the question is objected to as immaterial to this

suit; because the facts stated by the witness, relevant to the sketch, show that he would not be likely to remember its character in detail, no matter how strong his general power of mechanical memory might be.

Complainant's counsel calls the attention of the Court, to the last clause of the above statement under the guise of objection, as calculated to lead and prompt the witness; not a legal objection in statement, form, or effect, in any respect; and complainant's counsel again protests against the coaching of the witness by Mr. Walker, by such statements in the guise of objections, and will continue to do so on every occasion, when such prompting is indulged in.

A. In answer; as far as I can recollect, the sketch may have shown two beds, as I have explained, but not what I would call a forming-bed. And to answer this question briefly, I will say that I have no recollection of what part of the machine this sketch did show, positively, whether it was a part where the bottom is formed; or some other part of the machine, being designed for that purpose.

X-Q. 203. Does this sketch you sent my firm correspond substantially to any sketch left by you with Mr. Hunter at the time you first placed these two applications in his hands, as already stated?

Same objections.

A. In answer: I would say that this sketch was to represent one of the views that I delivered to Mr. Hunter, at that time; because it was abandoned simply because it was soiled or torn. I further state the time I went to Hunter's office with these drawings and sketches, I delivered to him at that time, three different and separate constructions, of machines for that purpose; and the sketch referred to, undoubtedly resembled either the drawings and sketches that I left in one case, that wasn't applied for, or it did represent a view of patent, No. 564,288.

Adjourned until Thursday, March 19, 1903, at 11 o'clock in the forenoon.

Thursday, March 19, 1903, 11 o'clock A. M. Met pursuant to adjournment. Present: Mr. S. R. Betts and Albert H. Walker.

X-Q. 204. Now, referring to the Liddell patent, No. 564,288, please look at that patent, and state whether in drawings and description it correctly represents one of the paper bag inventions you put into the hands of Mr. Hunter, to make application on, at the time you first submitted to him the sketches for the two applications you have been testifying about, one being for that patent and the other for the patent in suit?

A. In answer; I would say that the drawings upon patent, No. 564,288, to the nearest of my recollection, represents very clearly and perfectly the drawings and sketches I took to Mr. Hunter at the time before stated, for the purpose of having an application made; and my reason for thinking and knowing it to be so; that is correct according to my sketches; the reason that I had for thinking so and knowing so, is that this was one of the first sketches and drawings that I made for these three separate constructions, and I had plenty of time at that time to devote to it, seeing that I wasn't hurried; as I was, in making the drawings and sketches for the last construction of machine that I sketched for said purpose, in that case; that is, in drawing and sketching, and planning for the last construction machine, which is the one I refer to as the one now in litigation. I would further state the drawings and sketches for patent, No. 564,288, and the drawings and sketches that I made for the one that was not patented, was, if I remember correctly, inked in, and more completely showing the details of the general construction.

X-Q. 205. You have fully answered my last question, so far as it refers to the drawings of Liddell patent, No. 564,288; but you have not specifically answered it with reference to the specification or description of the draw-

ings. Please now state whether that specification is a correct description of said drawings and their operation?

Mr. Walker requests the witness to take plenty of time and read the whole description through, in connection with the drawings, before answering this question; or alternatively, to examine the drawings carefully while the typewriter reads the description aloud. And as this operation will take considerable time, Mr. Walker suggests that a recess be taken, until two o'clock this afternoon, so that the witness can examine the drawings and specification of the patent fully and accurately, before answering the question.

Mr. Betts, in view of the fact that this is Mr. Liddell's own patent, considers the request above made, as extraordinary. He prefers that the witness being under cross-examination, shall examine the patent so far as he finds necessary in order to answer the question, and do so in the presence of the Examiner, and during the taking of testimony, and then give his answer. The suggestion to the witness in Mr. Walker's statement, that he needs and should take a specified, or extraordinary amount of time, to study up this answer, is objected to as somewhat suggestive.

Mr. Walker states to the court, that the patent referred to, in X-Q. 205, is not the patent in suit, but is one of many patents which were granted many years ago, upon the application of the witness; and that the drawings are decidedly complicated, and the reference letters in the description, are also decidedly complicated, in that they consist partly of capital letters, and partly of small letters, and where the capital letters are used, as well as where the small letters are used, they are sometimes accompanied, and sometimes not accompanied by additional marks; so that it really requires the deliberate examination of a patent expert, to ascertain whether the specification of the patent is a correct descrip-

tion of the drawings of the patent, and of the operation of the parts shown in the drawings; and having made that ascertainment, to answer X-Q. 205. For this reason, the question is objected to as not proper cross-examination; and because the witness has not been produced as a patent expert, but only as a machinist to testify about the character of what he did as a machinist, or as an inventor, before he executed the application for the patent in suit; and because, therefore, it is not proper cross-examination to ask him to examine other patents, and state whether they do or do not contain discrepancies between their drawings and descriptions.

Complainant's counsel criticises the above statement on the record by Mr. Walker, made in the guise of objection, as an unfair interference with the cross-examination, calculated and therefore presumably intended to influence or prompt the witness, and calls the attention of the court thereto in that respect.

Mr. Walker states to the court that his statement was not intended to prompt the witness, but only to protect the rights of the defendant against the effect of any error the witness may make in attempting to answer a question; which ought never to have been put to him at all, because it was entirely and undeniably outside of the scope of proper cross-examination.

A. The witness would like to state that before counsel, Walker, made the remarks in reference to the question asked me, that is, the last question asked me by counsel; I was just about to state or explain that I have never examined this patent, in order to fully understand whether the specification and the drawings corresponded intelligently; and it would necessitate me to take some little time to read it over carefully and study it, before I could give an intelligent answer, as my intelligence I don't consider is above the average.

Complainant's counsel calls the attention of the court

to this answer in connection with Mr. Walker's above statements on the record.

X-Q. 206. Well, take the necessary amount of time, and answer the question whether the specification of that patent, No. 564,288, fairly describes the drawings thereof; which you have already stated, as I understand you, are correct representations of the drawings and invention you took to Mr. Hunter in connection with the application for this patent.

Question objected to as calling for the result of expert work to be done after the question is put, and not for any information possessed by the witness at the time the question is put; and as calling for expert work of a kind which it does not appear the witness is fully qualified to do; and also because the information which the question requires the witness to obtain, and afterward to impart, has no connection with the direct examination anyhow.

A. In answer; would say that I have looked over and examined copy of said patent, for about an hour, and think I pretty clearly understand the contents. However, I don't consider myself infallible. I am liable to oversee things, and make mistakes, as any man would in my particular line of business. This copy, in all probability, of the patent, would be very clearly and easily read and understood by a patent solicitor, or a man making a special business of that profession, daily. But I am prepared to state and give my opinion, to the best of my knowledge and recollection, how near the patent referred to, as shown in the copy in my hands, compares with the drawings and sketches that I took to Mr. Hunter's office, at the time stated, for the purpose of securing patent on the same. To the nearest of my knowledge and recollection, the sketches and drawings that I took to Mr. Hunter's office, and the copy of which I now have in my hands, which is a Patent Office copy of the same, compares very favorably as

far as I can remember, in the general details, to the sketches and drawings that I delivered to him, for this application; with the exception of a few points in reference to given views, so that a man of my experience would fully understand it. In my impression, it would have been necessary for to have given two or three more detailed views of the same, so that a man of my experience in this line, would fully understand it. I will mention one of the points I have reference to, which may read perfectly intelligently, and clearly, to a man in the profession of soliciting patents. I refer to the clause in the specification of said patent, which reads as follows without including the whole sentence, "As soon as these actions have taken place, and the tube is delivered by the rotary delivery roll S, which has pins s, and is moved by a frame S^2, and link S^3, and arm S^4." In my opinion, this ought to read, "As soon as these actions have taken place, and the tube is delivered *to* the rotary roll S" and not "*by* the rotary roll S." As I have before stated, there are two or three minor points which in my opinion, would be necessary to give some more detail views, in order that a man of my intelligence and experience, in this particular line would be fully able to comprehend.

X-Q. 207. Well, you have not, in spite of the long time you took to consider it, fully and specifically answered X-Q. 206, which was, whether the *specification* of that patent, No. 564,288, fairly describes the *drawings* thereof; and fairly describes the invention you took to Mr. Hunter, in connection with those first drawings and sketches? Please try to answer my questions, and by so doing, you will greatly shorten this testimony?

This question is objected to, because it states the interrogatory in substantially different terms from X-Q. 206, and also because the answer to X-Q. 206, though perhaps not so accurate as a patent expert would have made it, was evidently made in good faith, and with substantial

conformity to the question, as the witness understood the question. And Mr. Walker suggests to Mr. Betts that he must not expect a plain and unpretending mechanic who modestly disclaims ability as a patent expert, to expound a complicated patent with perfect accuracy and infallibility. And Mr. Walker also mentions to Mr. Betts, that he himself is suffering from confusion of thought, in putting his questions; in that whereas, X-Q. 206 was confined to asking the witness to compare the specification and the drawings of letters patent, No. 564,288, together, and did not include any request to compare those documents with any third document or drawing; X-Q. 207 includes a requirement to state whether the specification of the patent No. 564,288, fairly describes the invention which the witness took to Mr. Hunter, in the latter part of 1895; and thereupon the witness is severely criticised by Mr. Betts in X-Q. 207, for not having made that comparison, and given information thereof, in the face of the fact that he was not asked in X-Q. 206, to make any such comparison as that.

Mr. Walker states to Mr Betts that if he will put plain questions to this witness, upon the subject of his direct-examination, he will undoubtedly get prompt, clear and responsive answers thereto. But that if he insists on putting questions to the witness that have no relevancy to the direct-examination, and no relevancy to the facts of this case, and no relevancy to the occupation or profession of the witness; and also puts those questions in so confused and contradictory a manner, that it is difficult for anybody to understand them; he cannot expect to make much headway with the deposition.

Complainant's counsel, Mr. Betts, in view of the grossly leading and unprofessional character of the statements just made on the record by Mr. Walker, and its evident direction to the prompting of the witness, withdraws his question.

X-Q. 208. Did you swear to the specification of the Liddell patent, No. 558,969, in the form in which it now appears on a printed copy before you and in connection with the application papers of that patent, prior to their filing in the Patent Office?

Objected to as calling for secondary evidence.

A. In answer; would say to the best of my recollection and belief, I swore to and signed the application of the patent referred to; but at this time, can't remember if the drawings were attached to the specification or not.

X-Q. 209. Well, was the specification you swore to, substantially the same as is the printed specification now before you of that patent, No. 558,969?

Objected to as calling for secondary evidence.

A. In answer, would say, as I have formerly stated, that I did not at that time read over the specification fully and clearly; nor compare them with the drawings, if said drawings were attached, to fully understand the contents thereof. It would be utterly impossible for me or any other man, unless he had a phenomenal memory, after the expiration of about seven years, to say positively, whether this specification and drawings are exactly the same as I signed at the time stated in Mr. Hunter's office in Philadelphia.

X-Q. 210. Well, do the specification and drawings of Liddell patent, No. 558,959, fairly embody in illustration and description an invention you put into Mr. Hunter's hands, for which to apply for a patent, in the Fall of 1895, as you have said?

This question is objected to, because it requires the witness to construe letters patent of the United States, No. 558,969; which construction is matter of law for the court; and not proper to be testified to, even by a patent expert, and certainly not by a plain mechanic. The question is also objected to as not proper on cross-examination, because the witness was not asked on direct examination

to state whether the Liddell Drawing, No. 1, was in conformity, or was not in conformity, to the Liddell patent, No. 558,969. Quite otherwise than this, the witness simply testified that the invention he put into Mr. Hunter's hands in the Fall of 1895 was, and is, embodied in Liddell Drawing, No. 1; and the witness did not undertake to testify, and was not asked, whether that invention conforms or does not conform to the Liddell patent, No. 558,969. Mr. Walker notifies to Mr. Betts that if he insists on an answer to X-Q. 210 he will be making the witness his own witness, and will be bound by that answer, and that the defendant will not be bound by that answer, whatever it may be; because the defendant has not opened the door to any such inquiry, and has not presented this witness, as a witness competent to have or to express any opinion upon the question whether the mechanism of the Liddell Drawing, No. 1, is fairly embodied in the Liddell patent, No. 558,969.

Complainant's counsel, in view of the grossly leading and suggestive character of the above statement and objection, and its interference with proper cross-examination, withdraws the question. Mr. Walker is notified that if this character of prompting is persisted in, the record will be taken before the Court and a ruling had on such form of objections.

Mr. Walker states to the Court that the foregoing objection to X-Q. 210 was inserted solely to save the rights of the defendant; and that in his judgment it was entirely proper in every part.

X-Q. 211. Referring again to the Liddell patent, No. 564,288; are you now able to state whether the specification of that patent, taken in connection with the drawings thereof, fairly and correctly describes an invention you put in the hands of Mr. Hunter, in the Fall of 1895, and on which application for patent was to be made?

Objected to as not proper cross-examination, and Mr.

Betts is notified that the complainant will be bound by the answer whatever it may be; and that the defendant will not be bound by the answer, no matter what it may be.

Complainant's counsel disclaims any responsibility.

A. In answer, would say, as I have before testified, to about the same question, I can only give the same answer, which is, to the best of my recollection and belief, this drawing and specification, or rather, the drawing, resembles the general construction, as near as I can think of, to the sketches and drawings I left for this purpose at Mr. Hunter's office, at that time. And if I be allowed to state, I don't presume to be able to criticise Mr. Hunter's work, as a patent solicitor. As far as my knowledge of his ability and what I have heard of him, I consider him one of the best and most reliable patent solicitors in the City of Philadelphia, and probably in the State. If I haven't answered this question fully, I will do it with pleasure, if counsel will remind me to get in, what I have left out.

X-Q. 212. Do you remember swearing to the application papers on which this patent, No. 564,288, was granted?

Objected to as calling for secondary evidence, the original document in the Patent Office, now accessible to everybody, being the primary evidence.

A. In answer; I do remember signing two application papers in Mr. Hunter's office, in reference to two patents, that have been before me to-day, No. 558,969 and No. 564,288, to the best of my recollection.

X-Q. 213. Are you able to point out, at the present time, any respect in which drawings or specification of this Liddell patent, No. 564,288, as issued, and now before you, differs from any papers which were shown you or presented to you for examination and signature, on January 7, 1896, at Mr. Hunter's office, in connection with the application for this patent.

A. In answer; would say I am unable to see any mate-

rial difference, as far as I remember, in the copy before me, of patent, No. 564,288, from the specification that I may have looked at more or less, before signing the specification. As far as the drawing is concerned, I haven't any recollection whether the drawing was attached to the specification, or not, although I presume it must have been.

X-Q. 214. Are you able to point out any material particular in which the drawings and specification of that Liddell patent, No. 564,288, differs from or fails to correctly show or describe the invention which you took to Mr. Hunter's office, in the Fall of 1895, as illustrated by sketches or drawings you then gave him, in order to prepare application for this patent?

A. In answer; to the best of my recollection, the copy before me, No. 564,288, represents as nearly as I can remember, the construction and the general principle of the drawings I took to Mr. Hunter's office, at that time; with the exception, which is very natural, and generally happens, that the Patent Office drawings are not exactly the same proportions of the parts generally given to a solicitor of patents, for the purpose of preparing patent thereby. For instance, the flat part of the cylinder here, if I remember right, is larger in proportion to the diameter of the cylinder, than the sketches I delivered to him for this purpose; and the shape of the frame, that is, the curves of the frame, which I consider is entirely unimportant, as far as the construction and practicability and the usefulness of the machine is concerned. I don't wish to take up time more than necessary in explaining things, that I think would be of no importance to my evidence, or to either party.

X-Q. 215. Well, so far as the specification of this patent, No. 564,288, is concerned; are you able to point out any part thereof, as now before you, in connection with the description of your invention, and of the drawings, which does not correctly describe your invention, as put in the

hands of Mr. Hunter, on your first visit to him, in connection with starting the application for this patent?

A. In answer; after reading the specification as I have done to-day, (and never having thoroughly read them before,) I consider the specification covers the construction of the invention in all its general details and working parts, as well, I think, as any first-class patent solicitor could accomplish. As far as the drawings before me are concerned, of the patent, No. 564,288, and as near as I can remember, this illustrates and describes and shows the same construction as the papers I delivered to him, for the purpose aforesaid; as it is somewhere about seven years since I last saw those sketches and drawings, and it would be almost impossible for a man like me, or almost any man, without he had a phenomenal memory, to state for a certainty if this drawing, in a copy I have before me, No. 564,288, is in exact conformity in every detail, and shape, and form, and truly represents in every shape, and detail, the sketches and drawings that I left with Mr. Hunter, at that time. As I have before stated, I believe it is nearly and as correctly drawn from the copies of sketches and drawings that I le[illegible]t his office, for said purpose, as any first-class solicitor of patents could execute. I further state, in reference to this, while I think of it, that it just came to my memory now, that what I am going to state will be an evidence of the facts I have formerly testified to; and that is, that the drawings I took to Mr. Hunter's office, to get the patent on same, which patent is numbered, No. 564,288; and also the other construction of a machine for the same purpose, which as far as I know, has never been applied for. Now, these two principles, that is the one before me, No. 564,288, and the one I have reference to, the drawings and sketches which I delivered to Mr. Hunter, and which I say that I don't understand that there has ever been an application applied for, never seeing or hearing anything of it. Now, it stands

to reason, that a man constructing and contriving devices for said purpose, as it progresses, will naturally try to improve upon his first constructions for the same purpose; and as I understand, and believe, although I haven't seen the drawings and sketches of the other plan that I referred to which was not patented, as far as I know, since I delivered them to Mr. Hunter's office at the time before stated. This convinces me more fully and clearly, that the testimony I have formerly given and the affidavit I swore to, and the drawing, Liddell Drawing, No. 1, must have been an improvement on the other two referred to; and it has always been my belief, and opinion, as far as my knowledge in mechanics is concerned, to attain speed and durability, a rotary motion is preferable to any oscillating motion, and the former two sketches and drawings referred to, were of an oscillating principle. I am thereby made more positive, that I must have constructed this patent, No. 558,969, as I have formerly stated, on a rotary principle, as I always try to avoid a reciprocating or oscillating movement if rotary motion is practicable, and will do the work required, as perfectly in every respect, as an oscillating or reciprocating motion can possibly do.

X-Q. 216. Looking at Liddell Drawing, No. 1, since you have made reference to that, do you consider that that shows or embodies a structure which is operative mechanically?

Objected to as not cross-examination, the testimony of the witness on direct examination, having been confined to the fact that Liddell Drawing, No. 1, represents his invention which he took to Mr. Hunter, and not having included any expert testimony relevant to the operativeness of that invention in the form shown in that drawing, or relevant to any question whether that invention could be made operative, by changing the forms or proportions of any or all of its parts. Mr. Walker states to Mr. Betts that he proposes hereafter to take elaborate expert testi-

mony of other witnesses on those questions of operativeness; and Mr. Walker suggests that if he insists on this witness answering X-Q. 216, he will be bound by the answer, and that the defendant will not be bound by the answer.

Complainant's counsel objects to the statement put on the record, by Mr. Walker, in the hearing of the witness; and which, excepting the first six words, thereof, is entirely unnecessary, in stating the objection, as very leading and suggestive and improper prompting of the witness, and in specific view of such prompting, complainant's counsel withdraws his question.

X-Q. 217. Did you ever see these two sketches now shown you ; and if so, when last ? And what are they ?

A. In answer, I may have seen this before, or not ; but I can't remember. I have an idea that I may have drawn this, and if so, it's for the purpose of increasing the speed on a bicycle, with the internal gear in connection with the smaller gear. That is what it looks to me. I recognize this second sketch, that is the smaller sketch. Here is what any man can read without any knowledge of drawings. This is a front fork of a bicycle ; the crank that operates the same is drawn here, and shown with the pin attached to it, that the pedal operates on ; and also a construction of gearing as I can read it, although it is roughly sketched, said gearing is for the purpose of increasing the speed of momemtum of the bicycle. If I remember right, I don't remember seeing them since the time I roughed them out in the shape they are here represented ; and if I sent them to Mr. Betts' office, in connection with the sketch of bag machine that was referred to in this case, yesterday, I didn't mean it. It was a mistake on my part.

X Q. 218. When was it you sent those sketches to my office?

A. To the nearest of my recollection, Oh ! it was prob-

ably a year ago. It might be more. I kept no date of that transaction.

Adjourned until Friday, March 20, 1903, at 11 o'clock A. M.

Friday, March 20, 1903, 11 o'clock, A. M. Met pursuant to adjournment; counsel present as before.

X-Q. 219. Please look at the drawing now shown you, and state if you recognize what it is?

A. In answer to the question, I would say that I recognize this as one of the sketches that I first sketched out for the purpose of having Patent Office drawings made for application for patent, No. 564,288, and which was abandoned on account of being soiled. Another was made, as far as I recollect, to take the place of this sketch, and was embodied in the drawings taken by me to Mr. Hunter's office in Philadelphia.

X-Q. 220. To the best of your recollection, was one of the drawings you took to Mr. Hunter's office, and left in his hands, at the time of your first visit there, in the Fall of 1895, and in connection with starting the application resulting in patent, No. 564,288, substantially similar as a drawing, to the one now shown you, and referred to in your last answer?

A. In answer; would say that the sketch now before me, to the nearest of my recollection, is substantially the same as the drawing I took to Mr. Hunter's office at the time stated, for the purpose of making application for a patent.

Complainant's counsel offers in evidence the sketch produced and which has just been identified by the witness, and same is marked "Complainant's Exhibit, Liddell Original Sketch" with the Notary's name and the date.

X-Q. 221. I note that on the sheet of drawing "Complainant's Exhibit Liddell Original Sketch" on one side is a drawing in red and black ink, with the words "Second

plan, side view, half size" written in pencil near the upper left-hand corner of the sheet; while on the other side of the sheet is, sketched in pencil, some sort of mechanism. To avoid confusion, please state which side of the sheet shows the paper bag machine sketch you have said was like the one you have left with Mr. Hunter, and also what the pencil drawing on the other side of the sheet represents?

A. In answer; the drawing that is now before me that represents the sketch I made in place of it, to the nearest of my recollection, that I took to Mr. Hunter's office at that time, is on the side of the sheet where it is written in pencil "Second plan, side view, half size" in the upper left-hand corner. The mechanism on the other side of the sheet is a device for merchant tailors for pressing heavy seams in cloth.

X-Q. 222. How many separate sheets of drawings or sketches did you submit to Mr. Hunter at the time of your first going to his office in connection with starting the applications for both these patents you have been talking about, viz.: No. 564,288 and No. 558,969?

A. In answer, to the nearest of my recollection, although it is almost impossible for me to recollect how many sheets of drawings I made for each of the different constructions that I took to Hunter's office for the said purpose; but, to the nearest of my recollection, I think there may have been three or four different views of each of the two first constructions taken by me to Mr. Hunter's office for that purpose. But, as near as I can recollect, the third construction, or last construction, which is illustrated, more or less, in patent No. 558,969. To the nearest of my recollection, I think I only made one large pencilled sketch, full size, one side elevation view, with probably some of the other details. That is to the nearest of my recollection, at this time.

X-Q. 223. Do you remember whether you went down

specially from Brooklyn, to submit these sketches for these various applications, just referred to, to Mr. Hunter?

A. In answer; I did go to Mr. Hunter's office in the latter part of 1895, to give these sketches and drawings to Mr. Hunter, for the purpose before stated. I went specially from Brooklyn at that time, to Mr. Hunter's office for the purpose of submitting these drawings and sketches.

X-Q. 224. Did you go down from Brooklyn, the same day that you submitted these sketches first, to Mr. Hunter, or the previous day?

A. To the nearest of my recollection, the morning when I went to Philadelphia, with these sketches and drawings, I went to Mr. Haverstick's office, and that same day went to Mr. Hunter's office, with the drawings and sketches, to the nearest of my recollection.

X-Q. 225. And was it the same day that you took these sketches and drawings to the draftsman in Philadelphia?

A. Yes. I couldn't say whether I took the drawings and sketches with me, or the draftsman carried them. I remember we went to the draftsman's office together, and on that same day that I arrived in Philadelphia. That is to the nearest of my recollection.

X-Q. 226. Then the draftsman met you at Mr. Hunter's office on that day, did he?

A. To the nearest of my recollection, the draftsman must have met me there that same day. I presume that Mr. Hunter sent for him to call at his office, for the purpose of taking the sketches and drawings around to his drawing-room.

X-Q. 227. And you accompanied the draftsman with with the drawings brought down by you, to the draftman's office? Is that right?

A. To the nearest of my recollection, I did accompany that draftsman around to his office on that same day.

X-Q. 228. And at the draftsman's office, did you go over the drawings with him, in the way of explanation ?

A. I did go over the drawings with him, to the nearest of my recollection, and explained things in a general way.

X-Q. 229. Did you transact any other business at Philadelphia that day, except submitting these drawings and starting these applications ?

A. I have no recollection of doing anything in the nature of the business for the Company that same day.

X-Q. 230. Do you mean anything else ?

A. I mean anything else for the Company.

X-Q. 231. Do you remember whether you submitted any written notes or memoranda in connection with these drawings ?

A. I have no recollection of submitting any written notes or memoranda, or anything else pertaining to the drawings, at that time.

X-Q. 232. What was your understanding at that time, as to what would be done by this draftsman in connection with these drawings you submitted ?

A. I supposed that Mr. Hunter would put him to work to make drawings for an application for the same.

X-Q. 233. What was your understanding as to what would be done by Mr. Hunter in connection with these drawings you submitted, to him, and which were then given the draftsman ?

A. I certainly supposed that he would superintend the drawings, as any solicitor of patents would ; and prepare the applications, in all probability, himself.

X-Q. 234 So far as you were concerned, did you not consider that the drawings you submitted to Mr. Hunter at this time, in connection with such explanation as you made of them, to him, or the draftsman, set forth inventions of yours, in paper bag machinery, which were ready to be patented ?

A. I can't understand the question.

X-Q. 235. Did you not consider that the drawings you, submitted to Mr. Hunter at this time, showed inventions of yours in paper bag machinery sufficiently developed to be made subject of applications for patents?

A. Now, I understand the question. It is more clearly stated. I certainly did consider, and think and suppose that the drawings and sketches that I took to Mr. Hunter's office, for the purpose stated, if drawn in accordance with the sketches I had left him, could be put into a patentable form, in the shape of a machine, for that purpose. But I always had my doubts about the third and last construction being worked out properly, upon paper, in the shape of a drawing, by any draftsman, or myself even; and I think the only way that could be done, in order to make the forming-plate of said patent, that is the last construction, which is patent, No. 558,969, a practical working machine, in order so that the forming-plate, that is the sharp edge of the forming-plate comes in contact with the cylinder, while the bottom of the bag is being formed, in order for the sharp edge of that plate that comes in contact with the cylinder, could travel exactly at the same speed as the surface of the cylinder does travel in order to make that bag perfect; it is my impression that the only way that that could be practically and exactly put in proper shape and construction, to do what it is intended for; the eccentric gears or obliptic gears, (which is the same thing,) would have to be modeled and shaped, probably a great many times, before it would be possible to get the desired effect that is wanted, which I have explained in this same answer.

X-Q. 236. When you speak, in the last answer, in regard to doubts about the third and last construction, and so forth, and also speak of the eccentric or obliptic gears, having to be modeled and shaped, etc.; do you refer to the construction which you have stated on your direct testi-

mony you submitted to Mr. Hunter and his draftsman, in the form or substantially the form of drawing, Defendant's Exhibit, Liddell Drawing,' No. 1 ?

A. I refer to Liddell Drawing, No. 1, which I thought and supposed, and am really convinced, that this construction was embodied in the sketches that I took there for that purpose at that time, in a crude manner, very incomplete, as I was hurried by the Company, at that time, to bring the sketches on, for the purpose aforestated. I had no time to make detailed drawings, or work out or show cams and obliptic gears so as to be very clear, to a draftsman or anyone that didn't fully understand the making of bag machines. I will further state, and I think I have good cause to state, that I have never made any reference to Mr. Hunter's ability, as a patent solicitor, other than a first-class patent solicitor, in every respect, as far as I know, and have heard. I think that will cover it all.

X-Q. 237. Following out the last clause of your answer, although it was not responsive, have you any reason to suppose that Mr. R. M. Hunter who was the solicitor of the patent in suit, as well as of the other patent, No. 564,288; in connection with either of those applications, wilfully drew them otherwise than as he supposed to be in accordance with your inventions submitted to him; or wilfully misled and deceived you into signing papers, which did not embody your invention ?

This question is objected to; as inadmissible because it calls upon the witness to pass judgment upon the conduct of Mr. R. M. Hunter; and because that judgment can properly be passed only by the Court in the light of all the facts, relevant thereto, including facts hereafter to be proved, and presumably unknown to the witness.

This question is also objected to as not proper cross-examination; because the direct examination contains nothing relevant to the question whether the changes

which were made by Mr. R. M. Hunter, or by his draftsman, in the plan of Liddell Drawing, No. 1, when Mr. Hunter, or that draftsman, produced the drawings of the Liddell patent, No. 558,969, were changes due to fraud perpetrated by Mr. Hunter, or were due to innocent misunderstanding of the duty of a solicitor of patents, not to introduce inventions of his own, into the applications of other men.

Mr. Walker states that this objection is interposed in the absence of the witness, so as to make sure of concealing from him, every word contained in the objection

Mr. Betts states that the method adopted in this instance of having Mr. Walker's statements in support of the objection put on the record in the absence of the witness, meets with his emphatic approval; and he requests that it be continued, in order to obviate, as it will, a certain amount of statement and friction developed on the record, in connection with the previous cross-examination of this witness.

Mr. Walker gladly agrees to ask the witness to retire into another room, so that he cannot hear the objections interposed; whenever, hereafter, Mr. Walker is about to interpose an objection.

A. I haven't the least foundation or reason whatever to imagine or think from any source whatever, that Mr. Hunter wilfully drew up these drawings, or had the specifications drawn up, with any other intention but what was honorable and right, as a patent solicitor, in every respect. And I further state, if I be allowed, that the difference of the construction as shown in patent, No. 558,969, wherein it differs from the Liddell drawing, No. 1, and the details formerly explained, which I might say, so as to be clearly understood, the forming-plate revolving continuously around in the one case; and in the other case, as the patent is granted, oscillating, or reciprocating; and I now state that the only person that I can think or in fact

know, for the difference of the two constructions, and also how it happens that such is the case, I acknowledge that I am two-thirds to blame for the difference in construction. Perhaps I may say the draftsman may be at fault also; and now I will explain the reason, so as to be clearly understood of what I am saying.

In the first place, I blame myself for allowing myself to be hurried in making any sketches and drawings for the construction of patent, No. 558,969, and taking them on to Philadelphia, in such an incomplete manner, and as far as I can recollect, there were not detail views enough shown, in the sketches, for that purpose, to properly enlighten or inform any draftsman, clearly what the construction of the plan was for the said application; and I think that he may have construed a cam or cams in place of obliptic gears, which I think it was very liable for him to do, with such incomplete sketches and drawings. Nevertheless, I would think that he was partially to blame for proceeding with anything in the shape of drawings for that purpose, unless he fully understood and clearly understood what he was drawing. I throw no reflection on the draftsman, considering that the sketches and drawings, that I made for said purpose, and delivered to him, were so very incomplete and imperfect.

X-Q. 238. I gather from your last answer, as well as from some others, that the drawing or sketch you have said you submitted to Mr. Hunter and the draftsman, on the occasion we are referring to, was not as complete and perfect, and full a drawing, as the drawing on cloth now before you, and which is "Defendant's Exhibit, Liddell Drawing, No. 1" in this case. How is that?

A. I would certainly say, to the best of my recollection, that it was not as perfectly and clearly shown, as this drawing, Liddell Drawing, No. 1, before me.

X-Q. 239. You say in answer 237, that you think Mr.

Hunter's draftsman, to whom you submitted these drawings and sketches in Philadelphia, as stated, "may have construed a cam or cams in place of obliptic gears which I think it was very liable for him to do" etc. Now, is it a fact that the substitution or construction of a cam or cams in place of obliptic gears, which latter are shown in Liddell Drawing No. 1, would act or tend to, or in general terms, result in, a change of the motion of the forming-plate shown in that drawing, from a motion of revolution as shown therein, to a motion of oscillation or reciprocation over the cylinder? I ask the question in general terms, without going into the exact details of construction, which might have to be worked out, as to character and shape of cams, connections, etc?

This question is objected to as not proper on cross-examination; because it has no relevancy to the direct examination.

Mr. Walker supports this objection; by stating to the court, that the essential facts proved in the direct examination, were, that Liddell Drawing, No. 1, conforms to the drawing which Mr. Liddell took to Mr. Hunter; and that Mr. Liddell first acquired knowledge of the cam K, the rod k, the link k^2, and the arm connecting that link to the gear M', of the Liddell patent, No. 558,969, long after that patent was granted; and that Mr. Liddell never invented, planned, or otherwise produced that mechanism of the Liddell patent, No. 558,969, which is specified in claims 1, 2, and 7, of that patent, as "operating means for the forming-plate, adapted to cause the said plate to oscillate about its rear edge upon the surface of the cylinder, during the rotary movement of said cylinder"

Mr. Walker submits to the court, that all questions relevant to the character or the significance of the similarities and differences which have been proved to exist between the mechanism of Liddell Drawing, No. 1, and

the mechanism of the Liddell patent, No. 558,969, are foreign to the direct examination, and therefore, ought not to be made the subject of cross-examination. And Mr. Walker states to the court, that he proposes hereafter to take several expert depositions relevant to those questions; and that he has not taken and does not propose to take any testimony from Mr. Liddell, on any such question, because although Mr. Liddell is a skillful mechanic in paper-bag machinery, he is very unskillful in the use of the English language, and cannot compose, either orally or in writing, any full and clear explanation of such questions in geometry and mechanics, as are involved in the proved differences of structure, which exist between Liddell Drawing, No. 1, and the drawings of Liddell patent, No. 558,969. In justice to himself, Mr. Walker ventures to state to the court, that he has carefully refrained from conversing with the witness, before putting him on the stand upon any question relevant to the *significance* of the similarities and differences which have been proved to exist between the mechanism of the Liddell Drawing, No. 1, and the mechanism of the Liddell patent, No. 558,969; and has carefully refrained from informing the witness what effect upon the validity of the Liddell patent, No. 558,969, is expected by Mr. Walker to result from the fact that Mr. Liddell invented the mechanism of the Liddell Drawing, No. 1, and did not invent the mechanism of the Liddell patent, No. 558,969, which was somehow substituted in that patent, for the mechanism of the Liddell Drawing, No. 1.

For all these important reasons, Mr. Walker insists that X-Q. 239 should be withdrawn, and that no other questions relevant to the character or significance of the similarities and differences which have been proved to exist between the mechanism of the Liddell Drawing, No. 1, and the mechanism of the drawings of the Liddell patent,

No. 558,969, should be put to the witness on cross-examination.

And Mr. Walker notifies Mr. Betts that if he insists on examining Mr. Liddell by questions relevant to the character or significance of the similarities and differences which have been proved to exist between the mechanism of Liddell Drawing, No. 1, and the mechanism of the Liddell patent, No. 558,969, he will thereby be making Mr. Liddell his own witness, and will deprive himself of any right which he otherwise might have, to contradict his testimony, or to impeach his character for truth and veracity.

Complainant's counsel insists that his question is proper cross-examination.

A. I would like to state, before answering the question, that I have been requested by counsel that is cross-questioning me, (and also agreed to by counsel, Walker,) to confine my answers to as few words, and not to make the answers so long and elaborate, as I have heretofore. I will endeavor to comply with that request, to the best of my ability. But I think and believe, as a witness in this case, that I am entitled, and if so, I demand the privilege of answering questions put to me by either counsel, to explain them in as clear and full a manner as I possibly can, using what necessary language or time that I may take up to explain the same, for my own credit and honor, also for the benefit of this court, so that it will clearly understand and not misconstrue anything I may testify to, as a witness in this case. In answer to that, a cam motion in my knowledge of mechanics, would never produce rotary motion, such as is shown in Liddell Drawing, No. 1; except two cams are shaped somewhat alike, and run by the friction thereof. As I have heretofore stated, I think it is quite possible and probable from the crude and incomplete drawings, that the draftsman received from me, that he may have misconstrued a cam in place of a gear. If that isn't a full

explanation of my answer to the question given, I will please to do so, if they will remind me of what I have neglected to answer.

X-Q. 240. You have not fully answered the question, which was, whether a substitution of a cam or cams in place of the obliptic gears shown in Liddell Drawing, No. 1, would not result in a change of the motion of the forming-plate, from the revolution shown therein, to a motion of oscillation, in connection with the cylinder?

A. It certainly would. The one would be what I would call a oscillating motion; and the other would be a continuous revolving motion. Of course as in Liddell Drawing, No. 1, the obliptic gears would not cause the forming-plate to have the same motion, in its entire revolution; but would be slower and faster, more or less, during the revolution of said forming-plate.

X-Q 241. I find in Liddell patent, No. 564,288, the following descriptions of the former plate, or forming plate of that patent. In line 27, page 1, it is called "a rotary reciprocating forming-plate". In lines 62-66, page 1, the statement is "Arranged above the cylinder B, and corresponding to the bed T, thereof, is a former-plate E, hinged at the rear end at e, to the arms F" etc. Further description of this plate is elsewhere given as to construction and motion and in each of the eight claims of that patent, it is called "an oscillating reciprocating former-plate." Are those quotations in accordance with your understanding of the motion of the former-plate of Liddell patent, No. 564,288?

A. I would say before explaining or answering the question, that the question put to me, I think it's more complicated and elaborate than any of the answers that I have given. At the same time, I am willing to explain and give my opinion in answer to the question put to me. In the first place, the cylinder shown in patent, No. 564,-288, the flat surface of that cylinder, I would not call a

folding-plate, for the reason that it can be all one casting, with the flat surface as shown on it in this patent. The reciprocating or oscillating mechanism for operating the upper portion of the bag intended, I would call a plate, which oscillates on shaft e and f, as I understand it, for the purpose of conforming to the flat surface of the cylinder when forming the bottom of the bag. Slots in arm show where it allows the forming-plate to conform to the flat surface of the cylinder, when it is in operation forming the bottom of the bag. As near as I can remember, what I conceived and drew and sketched for the purpose of a machine of that construction, it is as near as I can think at the present time what was meant by me for this purpose.

X-Q. 242. Well, does not the former plate E, of this patent, No. 564,288, oscillate or reciprocate above the cylinder, and do so in accordance with your invention?

A. The drawing of patent, No. 564,288, as I understand it, the forming-plate above the cylinder, oscillates or reciprocates for the purpose designed, as near to my sketches and drawings for the purpose adopted, as I can think of or remember.

X-Q. 243. You have spoken of submitting to Mr. Hunter at the time in the Fall of 1895, when you submitted all these drawings and sketches, some material of that nature which, as I understand you, was not developed into an application, to your knowledge, and did not result in a patent to you; the two patents, No. 564,288, and No. 558,969, being the only ones issued in connection with what you submitted to Mr. Hunter at that time. Can you remember, and will you state what was the suggestion or invention covered by any drawings and sketches you then submitted, and other than what has developed into the two patents referred to and not including the Liddell Drawing, No. 1, form or sketch?

A. The invention of sketches and drawings which I

made and took to Mr. Hunter's office, at the same time that I took all the others; to the very best of my recollection, I haven't seen or thought of the construction or sketches and drawings for about seven years. I will explain it, as near as I can remember. It was a construction of a reciprocating or oscillating character, somewhat similar to patent, No. 564,288, but not in my estimation, as simple and practicable in the general construction, for the purpose it was intended for.

X-Q. 244. Is that all you are able to remember about the exact configuration of any drawings or sketches you submitted in connection with this other invention you refer to in your last answer, and which was not embodied in any patent, so far as you know?

This question is objected to, because it is not proper on cross examination to test the powers of memory of the witness by asking questions relevant to transactions foreign to the direct examination; this rule of law being based upon the obvious fact that a man may clearly recollect one fact or one experience which was known to him in some former year, while not remembering clearly, some other fact, or some other experience, which was known to him in the same year.

A. In answer, I couldn't truthfully or intelligently answer the question by explaining any of the essential features of this construction, particularly speaking; with the exception of what I stated in answer to the last question, which was to the nearest of my recollection, the general construction of drawings and sketches that wasn't patented, or application made for the same, as far as I know, I would just say that without having a phenomenal memory, and being engaged more or less of the time for the last seven years in making sketches and drawings, and developing mechanical ideas of various kinds, that at this time I am compelled to acknowledge that that is about all I remember of it.

X-Q. 245. Will you please mark on this "Complainant's Exhibit, Liddell Original Sketch" with the letter E, the part thereof, which corresponds to the former-plate E, arranged above the cylinder B, and hinged at the rear end at e, to the arms F, as set forth in Liddell patent, No. 564,288? You can also mark the letter e and the letter F, where they belong, and also mark the cylinder with the letter B, and the bed thereof with the letter T, to correspond with said Liddell patent, No. 564,288? Also mark the edge W and the shaft f.

A. I have done so.

X-Q. 246. Does not that drawing "Complainant's Exhibit, Liddell Original Sketch" show a former plate E, adapted or arranged to oscillate above a moving cylinder B?

A. It does.

X-Q. 247 Point out specifically, on the drawings of Liddell patent in suit, No. 558,969, the portion thereof which would have to be altered in order to make or attempt to make the forming-plate revolve instead of oscillating, as shown in said drawings?

Same objection as to X-Q. 239.

A. I begin by stating that the shaft L would necessitate an additional eccentric gear or obliptic gear on it, to work in conjunction with the other obliptic gear on the shaft f, to operate the two intermediate gears running loosely on studs, to operate the forming-plate shaft. I might state that the obliptic gear on the shaft f would also have to run loosely on said shaft, in order to make the forming-plate to have a continuous rotary motion.

X-Q. 248. Liddell patent, No. 564,288, states that it embodies a "rotary reciprocating cylinder B" p. 1, line 52, having arranged above it, a former-plate E, which is called in the claims "an oscillating reciprocating forming-plate", thus giving the combination of a rotary reciprocating bed, and an oscillating reciprocating former-plate. And the patent in suit, as granted, embodies the combina-

tion of a rotating cylinder, and an oscillating reciprocating former-plate. In the respects quoted, what difference is there between those patents, both having oscillating forming-plates, except that one has a rotating cylinder, and the other has a rotary reciprocating cylinder?

This question is objected to as not proper cross-examination; because it has no relevancy to the direct examination.

This question is also objected to because its answer would necessitate careful analysis by an accomplished patent expert of two complicated patents, and a full statement of numerous differences between those patents, which statement, in order to be correct, would have to be framed by an expert highly skilled in explaining in words, the comparative constructions and modes of operation, of two different complicated automatic mechanisms; and because the present witness has not been produced to testify on those difficult professional topics, and has not undertaken in his direct examination, to do any work of that class; and because it is apparent to whoever has read his answers, that he is very unskillful in his attempts to describe complicated mechanisms; and because, although the two patents submitted for his comparison were granted on his applications, he has testified that he did not become informed of the characters of those applications, when he executed them.

A. Well, in the first place, I will state that the patent, No. 564,288, I am sorry to say, that I think that Mr. Hunter, or whoever drew the claims and specification, made a mistake, in this particular: calling the cylinder in patent, No. 564,288, a rotary cylinder. As I understand mechanics, a rotary cylinder is a cylinder that rotates round and round continuously. This cylinder in said patent, shows an oscillating or reciprocating motion. The forming-plate also shows a reciprocating motion. And the difference between Liddell patent, No. 564,288, and Lid-

dell patent, No. 558,969, shows a cylinder of a continuous rotary motion, working in combination with a reciprocating former plate, and to further answer the question given, I would say that the other parts as shown which work in conjunction with the cylinder and former-plate, are a little differently constructed.

X-Q. 249. Could not the cylinder B, of Liddell patent, No. 564,288, be revolved or rotated instead of oscillating or reciprocating, and in connection with the oscillating or reciprocating former-plate E, substantially as shown, by simply providing for the revolution of the shaft b, and making a cam adjustment in connection with the connection C^2?

This question is objected to as not proper on cross-examination; because it has no relevancy to the direct-examination.

The question is also objected to; because it calls for information which the most accomplished paper bag machine expert ought not to be required to furnish without giving him several hours, if not several days of opportunity to study the problems involved. And Mr. Walker submits to Mr. Betts that it is entirely unfair to examine this witness at this time, on such complicated mechanical problems; because the witness may possibly be led by such questions, into stating as facts, the results of extemporaneous impression. Mr. Betts is reminded that this witness has been produced to testify upon a few simple matters of fact, within his personal experience and knowledge, and Mr. Betts is invited to cross-examine him at any length upon those matters of fact; but Mr. Walker earnestly requests Mr. Betts to discontinue his efforts to examine the witness upon complicated matters which are entirely foreign to the direct-examination, and upon which it must be apparent to Mr. Betts, the witness is not competent to put into words, whatever opinions he may have relevant thereto.

A. Yes, I would state that; if proper alterations were made, to revolve the cylinder continuously around, and a cam of the proper construction, (that is, proper shape,) was fastened to the cylinder shaft, (or any other shaft that revolves at the same velocity, that is the same speed,) and connecting rods attached to the forming-plate, or arm that operates the forming plate, was constructed properly, and the forming-plate made to travel in the exact unison of time as the face of the cylinder travels, from the time that the tube enters between the flat part of the cylinder, and the forming-plate, shown in view, figure 1, of this patent, till the time that the forming-plate and the flat part of the cylinder, is in a perpendicular line, as then the bottom of the bag would be drawn in the proper diamond form, and completed as far as that part goes, and delivered to the rollers S, S, which said rollers deliver to the creasing and pasting devices, also devices for closing the flaps of the bag.

Adjourned until Monday, March 23, 1903, at 11 o'clock in the forenoon.

Monday, March 23, 1903, 11 o'clock A. M. Met pursuant to adjournment; counsel present as before.

X-Q. 250. When you left these drawings and sketches with Mr. Hunter, and the draftsman you met at his office, on the occasion in the Fall of 1895, when you first went there to start the applications for patents referred to; did you leave, with either Mr. Hunter or the draftsman, any written memoranda descriptive of the drawings or of your inventions?

A. I did not; and I am never in the habit of leaving any description or instructions, more than what is shown in the drawings and sketches, that I deliver, to solicitors for that purpose.

X-Q. 251. Then you left it to Mr. Hunter, as solicitor,

did you not, to properly state your inventions and the claims therefor, in words ; preparatory to filing in the Patent Office ?

A. I left the sketches and drawings with Mr. Hunter (as I usually do) for to make drawings and claims and specifications ; trusting, to his ability to draw said specifications and claims up, also drawings attached to the same, in a proper and workmanlike manner.

X-Q. 252. And when you left the sketches and drawings with Mr. Hunter, or the draftsman; was it not your understanding that the specifications and claims, as drawn out by Mr. Hunter, should be submitted for your approval, before filing ?

A. Yes, I generally understand it is customary to do so. But, as I have already testified, that I only glanced at the description of specifications, not reading them fully, nor understanding the contents ; and I think that if I had read them there for an hour, with the confusion and talk that was in the room where I was, at that time, I would not have been able to understand them, in all the particular points and details.

Last clause of the answer objected to as volunteered and immaterial.

X-Q. 253. Is it not a fact, that you left these drawings and sketches in the hands of Mr. Hunter and his draftsman, with such explanations of them, as you then made, on the occasion of the first visit to Hunter's office, about this matter ; and left it to Mr. Hunter, as solicitor, to decide how many applications should be gotten up for what was embodied in the drawings and sketches you left, and also how those applications should be worded, to describe your inventions?

A. I have no recollection of making any explanation to Mr. Hunter about these drawings and sketches, in reference to how they should be gotten up in any particular way ; neither did I have any power or right to state

how many of those different constructions should be applied for, to get patents granted on them. I gave Mr. Hunter no instructions how to word the specifications or claims: as I considered that he was more competent than I to do so.

X-Q. 254. Did you tell Mr. Hunter that he should draw and file any particular number of applications for what was shown in the drawings and sketches you left with him and his draftsman, on this occasion, or did you leave it to him to draw the proper number?

A. I neither had the power nor authority for to tell Mr. Hunter to draw up any particular number of applications for these sketches and drawings I left with him; neither did I state which of these applications he should draw up; as I considered that the Company, that is the Eastern Paper Bag Company, would attend, to that part of the business themselves; and I not being authorized by the said Company to dictate or say what should be done in the matter, I made no remarks in reference to the same.

X-Q. 255. Now when these applications were presented to you at Mr. Hunter's office, on the day you swore to them; did you then raise any objection as to the form of the applications, or what they described or showed, before you made affidavit to them before the Notary?

A. As I have formerly stated; I made no objections or remarks as far as I can recollect, in reference to the manner in which they were drawn up, either the drawings or the specifications, nor claims. I simply signed them hurriedly, which I am sorry for now. I acknowledge that I didn't do right in the matter. But as I have before stated, I think if I had read them over and over, a number of times, with the confusion and number of men talking in the room where I signed them, I think I would have been unable to fully understand the contents of the specifications and claims, and have been unable to compare them

by figures and letters and numbers, with the drawings, for same.

X-Q. 256. You distinctly remember signing and swearing to the two applications referred to,on January 7, 1896, at the office of Mr. R. M. Hunter, in Philadelphia, do you not?

A. I distinctly remember signing one or more applications at that time; and I presume that I must have swore to them at the same time, although I don't clearly remember that.

X-Q. 257. Is it not a fact that you went to Philadelphia on this occasion, on notice and request to come on there, for the express purpose of signing and executing these two applications referred to?

A. To the nearest of my recollection and belief, as I formerly stated; I went to Philadelphia, on this occasion, expressly for the purpose of signing these applications, by a letter sent to me from Philadelphia, by either Mr. Haverstick, or Mr. Hunter.

X-Q. 258. Can you state from which one, Hunter or Haverstick, you received the notice in a letter, to come on to Philadelphia?

A. I positively cannot state; but I think it must have been Mr. Haverstick, as he did all the correspondence with me from Philadelphia.

X-Q. 259. Can you state whether on arriving in Philadelphia, you first went to the office of Mr. Haverstick or Mr. Hunter? I refer to the visit of January 7, 1896.

A. To the nearest of my recollection, I went to Mr. Haverstick's office, before going to Hunter's office, at that particular time; and my reason for thinking so, is that I remember Mr. Haverstick was present, if my memory serves me right.

X-Q. 260. Do you remember Mr. Haverstick having in his office, at that time, any of the papers connected with these two applications?

A. I haven't the least recollection that Mr. Haverstick had any papers in connection with these applications, whatsoever.

X-Q. 261. Do you remember whether or not, Mr. Haverstick, when you first went to his office, on this occasion, January 7, 1896, showed you any of the application papers of these patents, before you went with Mr. Haverstick to Mr. Hunter's office?

A. I haven't the least recollection or remembrance whatsoever, of Mr. Haverstick showing me any papers, or copies of applications for said patents, while at his office at that time; and don't remember ever seeing specifications or drawings, till I went to Mr. Hunter's office, at the time referred to.

X-Q. 262. Are you willing, after this lapse of time, to positively testify, under oath, that none of the application papers connected with these two cases, were shown to you, at Mr. Haverstick's office, when you went there on January 7, 1896, and before going to Mr. Hunter's office?

A. I am willing to testify and swear, as I have before stated, to the best of my knowledge and recollection, that I have no remembrance at this time, of ever being shown any papers or descriptions of anything pertaining to these applications referred to, at that time.

X-Q. 263. Can you recollect just when it was that you started for Philadelphia, so as to be there, for this meeting of January 7, 1896, to execute these papers referred to?

A. Would say, as I was in the habit of catching the half-past eight, or eight o'clock train, I think it might have been that train. And it was, to the nearest of my recollection, about between the fourth or fifth and the tenth of January, 1896, to the nearest of my recollection, that I went to sign these applications at Mr. Hunter's office.

X-Q. 264. The certificate of the Notary shows that the

papers were actually executed on January 7, 1896. Were you in Philadelphia, the day before you executed them?

A. As I have formerly stated, to the best of my recollection and belief, I went direct from Brooklyn, to Philadelphia, the day after I was notified to come there for said purpose; and about half an hour after arriving in Philadelphia, after seeing Mr. Haverstick, we went to Mr. Hunter's office, for the purpose of executing the said applications. I think it was all done probably within an hour, after I landed in Philadelphia that day, to the nearest of my remembrance.

X-Q. 265. Do you remember where you took lunch that day in Philadelphia; on January 7, 1896?

A. I don't clearly recollect. It might have been at the hotel where I was staying. I do remember taking lunch with Mr. Haverstick, on several occasions; but couldn't state for a fact, that I took lunch with him on that particular day.

X-Q. 266. Do you remember what hotel you were staying at in Philadelphia, on that occasion?

A. I had been staying at the Windsor Hotel, more or less, for two years; but at this particular time, when the applications were signed, for the two patents referred to, I hadn't been staying there I guess, two months previous to the time of signing the applications for patents referred to. So I may have taken lunch there, on the day of signing the applications; or I may have dined with Mr. Haverstick, on that particular day.

X-Q. 267. As a matter of fact, you do not remember where you did take lunch, or early dinner, on that day, or with whom, do you?

A. I couldn't swear positively where I did take lunch, or who I did take lunch with, on that particular day; as I don't place my memory with any minor details of that kind.

X-Q. 268. Is it not true that you went down to Phila-

delphia, at that time, and on that occasion, for the express purpose of executing certain applications for patents, and that you had no other special business which called you to Philadelphia, at that time?

A. As I have before stated; to the nearest of my recollection and belief, I went to Philadelphia, at that time, for the express purpose of executing the applications; and have no remembrance or recollection of any other particular business that I had for the Company, or for myself. That is to the nearest of my recollection.

X-Q. 268½. Are you able to give any reasons why these applications papers were not forwarded to you at Brooklyn, to sign and swear to, and return to Philadelphia?

A. No, I have no reason or explanation to make why these papers were not sent to Brooklyn for me to sign, in place of Philadelphia; further than I would judge, and it has been my experience, whenever it was the most accommodating for the principals concerned and also for the accommodation of the patent solicitor, to accommodate them. That is the only reason that I can give, other than it is customary to do so.

X-Q. 269. What was the necessity of getting you to travel to Philadelphia, merely to sign and swear to these two applications; if they could have been mailed to you in Brooklyn, and there signed by you, and your oath taken before any Notary there? Have you any explanation to make in connection with the method adopted?

This question is objected to, because it calls upon the witness to conjecture what motive influenced Mr. Hunter or Mr. Haverstick, to send for the witness to come to Philadelphia to execute the application papers; instead of sending the application papers to Brooklyn, to be executed by the witness, there.

A. I am perfectly well aware that they could have been executed by me in Brooklyn, before a Notary, and saved me the trouble of going to Philadelphia; although if I remember right, they requested me by a letter, to extend my

contract for some two or three months, after the contract of 1895 had expired; and I was still under salary at this particular time if I remember right; and I supposed the Company thought it best under the circumstances, for me to come to Philadelphia, and execute the papers, probably thinking that Mr. Hunter would take more interest in seeing them properly executed, than a party disinterested. That's about the only reason that I can give in answer to the question.

X-Q. 270. Under the arrangement between you and Mr. Haverstick, or the Company he represented; were you paid back any money you spent in travelling expenses, as for this trip to Philadelphia?

A. I can't remember distinctly being paid specially for this trip to Philadelphia; although it is possible that they might have paid me for the same.

X-Q. 271. Have you in your possession, or under your control, or have you found in connection with any searches you have made, or otherwise, any letters sent to you, either from the office of Mr. Hunter, in Philadelphia, or from Mr. Haverstick, or his firm, relating in any way to the subject of these two applications, you have been testifying about; or in any way, to your going to Philadelphia, in connection with them?

A. I have no letters or communications, as far as I have found, or know of, that have any relation to me going to Philadelphia, at that time, for the purpose of executing applications for patents. I have (this is voluntary) quite a number of letters, out of the number that Mr. Coburn has sent me from time to time, also I believe from Mr. Stearns, one of the officers of the Eastern Paper Bag Company; but they have no relation to this transaction, whatsoever. I might qualify this, by stating, that at the request of counsel, Mr. Betts, to make a search, among my old papers, drawings, or account books, to see if I could find anything pertaining to dates,

or facts when the different transactions connected with these two applications were done, and so forth ; and I wrote him that I could find nothing that would be of any assistance or value to the Eastern Paper Bag Company (save the sketch that I sent or mailed to him, marked "Complainant's Exhibit, Liddell Original Sketch") at that time.

X-Q. 272. Did the search you made cover a search for letters from Hunter or Haverstick, at about this period, 1895 and 1896 ?

A. The search that I made for sketches or drawings, was a pretty thorough search, I thought. I will add, that the search for letters or communications was perhaps not as thorough a search.

X-Q. 273. I desire you to make, in fairness to the present owners of this patent in suit, as thorough a search as you are capable of making, to find any letters, from either of the two Hunters, or from Mr. Haverstick, or the firm of Ide & Haverstick, or indeed from anybody, relating to the applications for these two letters patent referred to, and covering the period from say, May 1, 1895, to May 1, 1896 ; and particularly for any letter or letters requesting you to go to Philadelphia at any time, in connection with these two applications ; and very specially, the letter from Mr. Haverstick, in accordance with which you did go to Philadelphia, to sign, swear to, and execute the two sets of application papers, which were executed on January 7, 1896. Will you make such a search, and bring in the results at the next session ?

A. I will make a thorough search, and investigation, as counsel requests me to do ; so to find any letters, or papers or any correspondence pertaining to the subject counsel refers to, and I might add, that it might be well, in order that I might comply with all his questions, that I might be favored with a duplicate of his question.

X-Q. 274. Have you put in the possession of either Mr.

Walker, defendant's counsel, or Mr. Elsas, or anybody connected with the defendant Company, or in their interest, any memoranda, papers, drawings, sketches, or in fact anything, relating to these two applications about which you have been testifying, and which were written, drawn, or made, in or during the years 1895 and 1896? This includes letters, and papers of any kind?

A. In answer, I would say emphatically that I haven't put in the hands of Mr. Walker, counsel for the defendant, or in the hands of Mr. Elsas, or any parties connected with the Company, any papers, or drawings, or descriptions, or anything pertaining to the two applications of the patents in litigation; neither have I brought any letters or communications to the Continental Paper Bag Company, or any of its officers, explaining or stating anything in reference to explanation of construction or papers or letters, or anything of that character; neither have I to counsel Walker.

X-Q. 275. Have you any recollection of being written to, during the Fall of 1895, by either Mr. Hunter or Mr. Haverstick, with request that you should come on to Philadelphia, in connection with these two applications referred to, or either of them, and before the letter you received from Mr. Haverstick, under which you were in Philadelphia on January 7, 1896?

A. I haven't a clear recollection of being asked to come on at the time stated by counsel; and still I have a faint recollection of being asked to come on to explain to the draftsman, a certain part of the construction what was meant by my papers and drawings, that it seemed he didn't fully understand. And if I remember right, I gave him an explanation in a general way, about what he asked me, and told him I thought that he could work it out himself, all right, with the explanation given, and the sketch shown. That is to the very best of my recollection.

X-Q. 276. That explanation which was so asked for, as

you quite accurately recollect, was in relation to the drawings of the application for the patent in suit, was it not?

A. I couldn't positively state that it was, or not. I think it was in relation to both patents referred to.

X-Q. 277. Was the explanation that you made, in the form of a written letter?

A. It was not.

X-Q. 278. Then in what form was the explanation you made, in answer to this request for information?

A. I made verbal explanation to the draftsman, in reference to the construction of the applications for the patents; if it was so, that I went there to the draftsman's office, at any other time, than the first time, that I was requested to go there by Mr. Hunter.

X-Q. 279. Referring to your answer to X-Q. 275, have you not now, as you consider the matter carefully, a recollection of at some time, (between your first visit to Philadelphia, when you put the sketches and so forth in the hands of Mr. Hunter and the draftsman, and the date of January 7, 1896, when you swore to the papers,) being asked for information in connection with said drawings, and giving some information in connection with them, by which they could be correctly completed?

A. As I before stated, I have a faint recollection of being there in the draftsman's office, and explaining the two constructions for said applications in a general way; and I must have been requested by either Mr. Hunter, or Mr. Haverstick, to come there for that purpose.

X-Q. 280. I understand your last answer to refer to some time between the day when you first put these drawings into the draftsman's hands, and the time when you actually swore to the papers on January 7, 1896?

A. Yes, the time I refer to, to the nearest of my recollection, was between the time of putting the sketches and drawings into the draftsman's hands, and the time of executing the applications, for the same, to the nearest of my recollection.

X-Q. 281. You cannot now definitely state, can you, just how long before the actual signing and swearing to, these applications, you made this intermediate explanation?

A. I cannot.

X-Q. 282. Nor, can you now state exactly what that intermediate explanation was, can you?

A. I cannot; further than I have already stated, to the nearest of my recollection, it was a general explanation of the drawings and sketches for both applications, which was a very brief explanation. I think it didn't cover more than fifteen or twenty minutes.

X-Q. 283. On the day when you signed and swore to these two applications, January 7, 1896, do you not remember having a talk with Mr. R. M. Hunter (who was present here, on the day your testimony began)?

A. On the day referred to, I remember talking to one of the Hunters, but I couldn't state whether it was the Mr. Hunter that I saw here, on the first day of this testimony, or not. I had a slight conversation in reference to the time of day, etc. I will say to the nearest of my recollection, our conversation consisted more or less in a wooden model that I took to Mr. Hunter's office, for the purpose of illustrating the principle about how this particular bag bottom could be formed, which has reference to patent No. 564,288. It had no relation, that is, this model, had no relation to patent No. 558,969.

Q-X. 284. Did you leave that wooden model with Mr. Hunter?

A. To the best of my recollection, I left the model with Mr. Hunter. I don't remember seeing it in the draftsman's office, at any time.

X-Q. 285. Did not that model show or illustrate an oscillating or reciprocating former-plate, arranged to operate over or above a moving cylinder?

A. It did not. It was simply two pieces of board about

six inches square, jointed or hinged together, with the fingers that enter the bellows folds, and the two grippers for holding the extreme ends of the bottom, while being operated upon. I did put a blank tube or tubes into this model or device, to show to Mr. Hunter and Mr. Haverstick, the practicability and feasibility of drawing the said bottom of an S. O. S. bag into the proper shape required.

X-Q. 286. Was that model so operated by you, in the presence of Mr. Hunter and Mr. Haverstick, in one of the rooms of Mr. Hunter's office?

A. That model was operated and shown by me, to Mr. Hunter and Mr. Haverstick, in the same room that I signed and swore to the patent applications, to the nearest of my remembrance.

X-Q. 287. Well, that was one of the rooms of Mr. Hunter's office, was it not?

A. Yes, sir, as far as I know.

X-Q. 288. Did you bring this wooden model down to Philadelphia, with you from Brooklyn?

A. I did, and I believe the same day or the same time that I took the drawings and sketches to Philadelphia, for said purpose.

X-Q. 289. As you looked at these two applications for patents, on January 7, 1896, (and which you had come down to Philadelphia, to sign and swear to,) just before signing and swearing to the same; what is your recollection as to their general appearance, in respect to being on typewritten sheets or in other respects?

A. In answer to the question; I am compelled to repeat what I formerly testified to, and that is, that I didn't investigate or read the specifications or claims, or compare the same with the drawings, to properly comprehend the the contents thereof, whether they fully or partially agreed, as far as the description and the drawings were concerned;as I simply took a casual glance at probably the first page or so, of the description, and signed the papers under the same conditions, that I have testified to, formerly.

X-Q. 290. My question was directed to bring out your recollection as to whether these application papers as you looked at them, to whatever extent you did, just before signing and swearing to them, were on typewritten sheets or otherwise?

A. To the nearest of my recollection, they were on typewritten sheets, and not written with pen and ink.

X-Q. 291. Are you able to state exactly when you left Philadelphia, after signing and swearing to these papers?

A. Yes. To the best of my recollection, I left Philadelphia, that same evening; for the purpose of going to Washington, for a few days, to see the Capitol and the sights.

X-Q. 292. Then according to your present recollection you were in Washington, D. C., the day after you signed the applications referred to, in Philadelphia?

A. Yes, sir, to the nearest of my recollection, I was in Washington, the day following the day I signed the applications; and remained there about a week.

X-Q. 293. What hotel did you stop at there?

A. I stopped at two different hotels, on Pennsylvania avenue. I have no recollection of the names of them, either.

X-Q. 294. Think hard, and try to remember the name of one out of the two hotels, you stopped at in Washington, on this occasion?

This question is objected to as inherently immaterial; because it is immaterial what the witness did, or where he was, on the day after he signed the two applications, that date having been established as January 7, 1896. And if the question is intended simply to test the memory of the witness, it is objected to as improper on cross-examination; because it relates to his memory of a fact foreign to the case; and because questions put to witnesses to test their powers of recollection, by inquiring for collateral facts, are inadmissible.

A. I could not remember at this time, the name of either one I stopped at; further than that one was in Pennsylvania avenue, near the Armory. The other was more towards the Capitol. And I didn't all the time, take my meals in the hotels, but dined at restaurants, wherever I happened to be, while I was sight-seeing. I didn't pay any attention to the names of the hotels, but I simply walked in and engaged a room, and registered for the same.

X-Q. 291½. Have you anything at all, except your mere memory, after a lapse of more than seven years, which will enable you to state how long you were at Mr. Hunter's office, on the 7th day of January, 1896?

A. I have nothing that I have any knowledge of, that would give me knowledge and information how long I stayed in Mr. Hunter's office, on that particular occasion; further than I have stated in my previous testimony, which is simply, my recollection.

X-Q. 292½. Are you able to fix any more definitely, than you already have done, the length of your interview of consultation with Mr. Hunter, in regard to these two applications, or either of them, at Philadelphia, on January 7, 1896, and before you signed and swore to them?

A. I cannot. I have no record or means of ascertaining, or any record, whereby I could more pointedly state the time I remained there, than what I have formerly stated.

X-Q. 293½. Can you state whether or not the draftsman, whom you saw when you first took the drawings and sketches to Philadelphia, was present at Mr. Hunter's office, at this interview of January 7, 1896?

A. To the nearest of my recollection, as I have before testified, he was there; and I presume he was called there, while I was there myself, for the purpose of carrying the sketches and drawings to his office, and getting instructions to start upon the work.

X-Q. 294½. I think you have not correctly understood my question, and I do not wish to take any advantage of

that fact. My last question was as to your recollection whether or not the draftsman, whom you saw when you first took the drawings and sketches to Philadelphia, was present at Mr. Hunter's office at any time during the interview of January 7, 1896?

A. I have formerly stated and explained, to the nearest of my knowledge and belief, that the draftsman who drew these drawings, was there present, in Mr. Hunter's office, at the time I took the drawings and sketches to Mr. Hunter's office in the early part of January, 1896. I beg pardon to amend that last remark, as I referred to, in the latter part of the year 1895.

X-Q. 295. Do you remember seeing at anytime, in Mr. Hunter's office, in connection with these applications, the blue prints of any of the drawings?

A. I do not.

X-Q. 296. Have you any recollection whatever, of either Mr. Hunter, showing you a blue print of one of the drawings, for the application for the patent in suit?

This question is objected to; because it is substantially identical with X-Q. 295, except that X-Q. 295, covered the application for patent, No. 564,288, as well as the application for the patent in suit, No. 558,969; and because X-Q. 295, was answered positively in the negative, and therefore, X-Q. 296, is merely a repetition.

Mr. Walker suggests to Mr. Betts, that his cross-examination as to what occurred when the witness was in Mr. Hunter's office, January 7, 1896, has already been excessive, in length, and has gone over all possible parts of the ground, with such excessive repetition, that the topic ought really to be dropped, in the interest of the prompt administration of justice, without excessive and unnecessary expense to the parties in taking and printing testimony.

A. I haven't the least recollection whatever, of either Mr. Hunter showing me a blue print of the patent in suit, either then or at any other time.

X-Q. 297. To the extent that you did look at the specifications and drawings of these two applications for patents, on January 7, 1896, and before signing and swearing to the same, and to the extent of your recollection of what those applications then contained, or consisted of; are you able to state that, as sworn to, they differed in any respects, from the letters patent Nos. 558,969, and 564,288, as issued ?

A. To the nearest of my recollection, seeing that I didn't compare the specifications and drawings, of said applications, to any way understand them thoroughly, whether the specifications and drawings were correct, and in conformity with each other ; I couldn't then, or now, state positively any of the particular points in which they differed from each other, and that the specifications were not drawn up in conformity to the drawings attached to the same. And in order that my answer be understood thoroughly, that I didn't compare the drawings and specifications or have time or opportunity under the circumstances, to see and understand if they were correct, according to the sketches and drawings that I had delivered to Mr. Hunter, at the time stated.

X-Q. 298. You have not quite answered my question. I ask whether, so far as you can now state, from any knowledge you have, the application papers for these two patent applications including that for the patent in suit, were not sworn to by you, in the same form substantially, as they appear in the two patents as issued ?

This question is objected to, as calling for secondary evidence, upon the question whether two sets of two documents each, which are presumably still in existence, do or do not substantially conform to each other.

A. I have no reason for thinking there was any alterations made either in drawings or specifications, at that time, when I signed and swore to the same, from what they appear as issued by the Patent Office, in the two

copies No. 558,969, and No. 564,288; and I would further state that I think that Mr. Hunter would never dishonor his reputation, by altering the same, at any time.

X-Q. 299. Can you suggest any possible object Mr. Hunter or the parties to whom you had assigned the application for the patent in suit, had or could have, in filing an application which in drawing and specification, should not conform to what was really your invention; in connection with the application for the patent in suit?

This question is objected to, as immaterial; because the witness does not appear to be an expert, in judging what motive might influence Mr. Hunter, or the parties to whom he had assigned the application for the patent in suit, to substitute an invention that could possibly be made to work, for an invention that could not possibly be made to work, in the application for the patent in suit.

A. I have no foundation for any belief or idea in any grade whatever, for believing that Mr. Hunter or any of the parties, or officers of the Eastern Paper Bag Company, should have made any changes or alterations whatsoever, contrary to the sketches and drawings delivered by me at the time stated.

X-Q. 300. Well, what is your idea on the subject? Is it that Mr. R. M. Hunter who drew the application, made a mistake?

This question is objected to, as not proper on cross-examination; because the witness was not asked, and he did not state, on direct examination whether the differences between the mechanism of the Liddell patent in suit, on the one hand; and the mechanism of Liddell Drawing, No. 1, on the other hand; were proper, or were not proper, to be introduced by Mr. Hunter, or by his draftsman, into the application for the patent in suit.

Mr. Walker states to the court, that in his conversation with the witness, he has always refrained from discussing that question with him; because he desired the

witness to testify in respect of the *fact* of that difference, without understanding the significance of that fact, and without understanding the importance of that fact, or the way in which that fact may affect this suit.

For these reasons, Mr. Walker respectfully requests Mr. Betts to refrain from questioning the witness, relevant to the significance of the difference between the mechanism of the Liddell patent in suit, and the mechanism of Liddell Drawing, No. 1, on cross-examination. And on this point:

Mr. Walker calls the attention of Mr. Betts to section 445, of Greenleaf on Evidence, where it is stated, that it is now considered by the Supreme Court, of the United States to be well established, that a party has no right to cross-examine any witness, except as to facts and circumstances, connected with the matters stated in his direct examination; and that if he wishes to examine him on other matters, he must do so by making the witness his own, and calling him as such in the subsequent progress of the cause.

For these reasons, Mr. Walker respectfully requests Mr. Betts to discontinue his programme of taking direct evidence from this witness, at the expense of the defendant, when his only right is to cross-examine this witness on the points of his direct examination.

And Mr. Walker requests the court to regard such direct testimony as Mr. Betts does secure from the witness, in pursuance of his programme, as being testimony taken on behalf of the complainant.

A. Before answering this question, I would like to state that the last time I answered that same question, or almost equivalent to it, I was requested by counsel, not to make my answers to his questions, so long and elaborate, as I have done heretofore. And I am willing to comply with that now; but I must request counsel to give me reasonable time and to use a reasonable amount of language to answer this particular question, so that nothing

1576

I say now, or hereafter, may be misconstrued, or understood contrary with what I say and testify to. Now, I will begin to answer the question, by saying, as I did heretofore, that the only reason and belief, that I have for the difference that is shown in the patent, No. 558,969, and the difference of what my sketches and drawings showed for the same, is the fact which I acknowledged heretofore, that the sketches and drawings for this particular construction of the machine mentioned, which I refer to as the one in litigation, on account of the way I was hurried, to get sketches and drawings completed for said application, that they were drawn and sketched in a very crude manner, very imperfect, and incomplete, and it is quite reasonable to suppose from the imperfect condition these sketches and drawings were, when given to the draftsman, that he was liable to misunderstand or misconstrue the certain parts, differently from what I intended them to be; such as, obliptic gears in place of cams, etc. And as I have acknowledged previous, that I blame myself for two-thirds of the fault, and the draftsman may be blamed for one-third, on account of him taking the responsibility, as I would judge, to embody features that he didn't fully understand, or hadn't been clearly shown by me, in my sketches and drawings.

X-Q. 301. Please look at the Patent Office copies of the following letters patent of the United States, granted to you, and referred to in answer to Q. 7, viz.:

No. 370,548, of September 27, 1887. No. 455,407, of July 7, 1891. No. 487,225, of November 29, 1892. No. 491,573, of February 14, 1893. No. 492,498, of February 28, 1893. No. 535,591, of March 12, 1895.

State in connection with the drawings and specifications of these patents, after such examination as you choose to make, whether there is in said drawings or specifications, any matter wrongly or incorrectly shown, described or set forth, as compared with what were really

your inventions, applied for, and patented, in connection with those several patents mentioned.

Mr. Walker objects to this question, on the following grounds:

The direct testimony of the witness, in answer to Q. 7, was confined to stating that he is the same William Liddell upon whose applications the six patents specified in X-Q. 301, were granted; and therefore, it is not proper cross-examination to ask the witness to hereafter examine the drawings and specifications of those patents, with a view to ascertain whether they contain any matter wrongly or incorrectly shown or described or set forth, as compared with what were really the inventions of the witness, back of those applications respectively.

The six patents contain more than sixty columns of specification, with more than five hundred words in each column and thus contain more than thirty thousand words; while the six patents include twenty sheets of drawings, many of which sheets are very complicated, and have hundreds of reference numerals and letters, of a very complicated character, on each of many of the sheets.

The six patents were all granted many years ago, the oldest one more than fifteen years ago; and the last one more than eight years ago.

All of the six patents, except the last one, were drawn up and solicited by other solicitors, than R. M. Hunter.

The witness is now sixty years old, and his eyesight is necessarily much less minutely infallible than it was in earlier years. And he never was a patent expert, as far as appears, and never devoted himself to the critical examination of complicated specifications and drawings of automatic paper bag machinery; for the purpose of ascertaining any differences between those specifications and those drawings; or for the purpose of ascertaining how the machines illustrated in those drawings, and described in those specifications compared or did not compare, with

1578

what inventions were supposed to be back of them; with a view to ascertain whether the patents examined, had been caused by fraud, or by mistake, to differ from those inventions, respectively.

The question whether either of the solicitors of either of the six patents, specified in X-Q. 301, in making the drawings, and writing the specifications of those patents, departed, or did not depart, from the inventions back of those patents; is entirely immaterial to the question whether the solicitor of the patent in suit, No. 558,969, departed, or did not depart, in making the drawings, and writing the specification of that patent, from the invention which Mr. Liddell at least partly developed and presented to that solicitor, or his draftsman, for the purpose of having the application for that patent, prepared.

No man whose knowledge of the six patents specified in X-Q. 301, is not more recent than the knowledge of Mr. Liddell relevant to those patents, appears to be, can examine and analyze all those patents, fully enough to compare them with other structures, differing more or less from them, or with such drawings or sketches as may have been supplied to the solicitors of those patents, as foundations for their preparation, and then make those comparisons, in less than a week. And it is highly improbable that Mr. Liddell could fully comply with X-Q. 301, with less than a month of steady and very hard labor.

For these reasons, and because the defendant's time for taking testimony in this case, as now limited, has but seven days more to continue, and because the defendant must take depositions of at least two experts, after the present deposition is finished; the witness is instructed not to undertake the labor required in X-Q. 301 until when, if ever, he is ordered by the court, so to do.

Complainant's counsel notes that he has some days since stated to Mr. Walker, that defendant's time in this case would be extended to include the month of April, 1903,

and thus to correspond with the time already given the defendant, by the complainant, in the corresponding suit of this patent in Connecticut, against the firm of Woodward & Rogers. Complainant's counsel objects to the above instruction as unwarranted and as interfering with the legitimate cross-examination. This witness has been produced with a vivid recollection, however obtained, of alleged error in the patent in suit, and it is desired to test his recollection and knowledge in connection with other patents, as referred to, also granted to him as inventor, and in this same branch of the art, and to test in this connection, and in this way, among others, the extent to which his imagination may have been stimulated or his testimony inspired or directed, in connection with the particular patent in suit, and the very remarkable, in fact, unprecedented, in patent litigation, circumstances, which he details in connection with said patent.

Mr. Walker states to the court, that the statement of complainant's counsel, made some days since, that the defendant's time in this case, would be extended to include the month of April, 1903, was not an unconditional statement at that time. But defendant's counsel thanks complainant's counsel for making that statement unconditional now, and will proceed accordingly.

Mr. Walker states to the court, that the genuineness of the recollection of the witness, that his invention back of the patent in suit, is truly represented by Liddell Drawing, No. 1; and that he did not, himself, contrive, or otherwise produce, the cam K, the rod k, the link k^2, or the arm connecting that link with the gear M'; is a point which cannot logically be investigated by asking the witness, first to call to mind all of his inventions which were back of six much earlier patents, and thereupon to compare those inventions with the specifications and drawings of those patents; with a view to ascertain what differences, if any, were introduced into those specifications

and drawings, as compared with the inventions back of them. And therefore, Mr. Walker respectfully submits to the court that X-Q. 301, is improper, and that the instruction to the witness not to attempt or undertake the work which would be necessarily involved in answering that question, was a proper instruction.

Mr. Walker therefore instructs the witness that it is his duty to decline to undertake to answer X-Q. 301. But Mr. Walker states to the witness that while he has a right to obey that instruction, he is not bound to do so.

Mr. Betts instructs the witness that he has asked the question as fair cross examination, although involving probably, considerable work, and asks the witness in fairness to answer it.

A. In answer to the question, as I understand it, it would take me some considerable time to be able to fully understand and explain in an intelligent manner, all the patents referred to. My answer to the question, was just exactly the same as counsel has stated to me. That's what I intended to answer, although it don't appear on the record what counsel has said to me. But I am perfectly willing at any future time, if I am compelled by the court or other authority, to do so

X-Q. 302. Then, you are taking the position that having been told by Mr. Walker not to answer the question in regard to these six patents, you will adopt that suggestion, although I inform you that you are at liberty to answer the question, if you desire. Is that so?

A. I do take that position at the present time.

X-Q. 303. Do you understand that your employment from the defendant in this case, puts you in a position where you must conform to the suggestions or directions of Mr. Walker, defendant's counsel, on the taking of this testimony?

A. I am under no obligation or restriction in any shape or form, neither to Mr. Walker, nor to the Continental

Paper Bag Company, to testify to anything contrary to what I believe and think, in reference to this case, whatsoever.

X-Q. 304. Then why do you not answer my question about these six patents granted to you?

A. Simply because, in my estimation, they don't pertain or apply to the suit in litigation, and it would take up some of my time unnecessarily.

Adjourned until Tuesday, March 24, 1903, at 11 o'clock A. M.

Tuesday, March 24, 1903, 11 o'clock A. M. Met pursuant to adjournment; counsel present as before.

X-Q. 305. In X-Q. 273, yesterday, I asked you to make a search for letters relating to the applications for these two letters patent, No. 558,969, and No. 564,288. Please state the result of such search, and what you did in making it?

A. I made a thorough search as counsel requested me to do, and in reference to finding any letters or papers, of anything whatsoever, that would enlighten me or prove to any person, the time that I took these drawings and sketches to Philadelphia, or the time when I went to Philadelphia, to sign and swear to the applications, of the two patents referred to; I will state after making a second search this morning, that the only thing I could find, (which I think has no bearing on the question,) are two letters from Mr. Hunter, also one from Mr. Stearns, which I now hand over to counsel. This may be a means of proving my former testimony to be truthful.

X-Q. 306. I note that the two letters from R. M. Hunter referred to, are dated June 13, 1902, and June 25, 1902, respectively. And the letter from Charles O. Stearns, is dated January 24, 1894. None of these comes in the period I asked about, nor have they any bearing on my question

or examination. Were these all you found, and did your search include a search for copies of letters sent by you to Mr. Hunter, or Mr. Haverstick in relation to these two applications?

A. I found nothing in the period counsel speaks of, that had any relation or would give me any date or information, when I took these drawings and sketches to Philadelphia, or when I signed and swore to the same. Neither have I any copies of letters sent by me to anybody, that would enlighten me, when I transacted this business in Philadelphia.

X-Q. 307. Please look at the United States letters patent, No. 535,951, dated March 12, 1895, and granted to William Liddell of Brooklyn, assignor to the Eastern Paper Bag Company, which are for paper bag machines, and about which you have given some testimony on your direct examination, and which appears from the signature of the drawings to have been taken out by R. M. Hunter, attorney; and state when you first saw Mr. R. M. Hunter in connection with the application on which this patent, is granted?

A. In answer to that question; I would say that I don't fully remember this patent, or the time that I drew it and designed it, or the time that I took it to Mr. Hunter for him to make application; and I will request counsel to give me some time to examine it thoroughly, before giving answer.

X-Q. 308. Well take all the time you want for this purpose. How long do you want?

A. It may take an hour. It may take all the afternoon.

X-Q. 309. How will reading that patent make you remember the date when you first took the application in whatever form it was, or first communicated the subject matter thereof, to Mr. R. M. Hunter, the attorney who took out the patent?

A. It's a very supposable case, that by my reading it

over, and examining the drawings, it will refresh my memory to remember the time to some degree, when I did design and draw this. And that would be a means, probably, of my getting at the date, or something near the date, that I took this construction to Mr. Hunter's office, for the purpose of having application made, for the same.

X-Q. 310. This patent shows on its face, that the application therefor, was filed February 9, 1894. Therefore, of course, it was put in the attorney's hands, prior to that date. Can you now state, from your present recollection or memory, how long prior to that date, it was put by you in Mr. Hunter's hands?

A. I cannot at this time, without examining the patent, and refreshing my memory from the same.

X-Q. 311. I note that the drawings of this patent, appear on their face to be signed by Ernest Howard Hunter, as one of the witnesses, and by R. M. Hunter, as Attorney. Are you able to state which of these two Hunters you saw when you first submitted the information for this application, or whether you saw them both, or whether you saw either of them; on that occasion?

A. At the time referred to, I couldn't say which of the Hunters I saw at that time; but I believed and understood that I was talking and explaining, in reference to making application for patent No. 535,591, I didn't inquire, neither did I know the given name of either Mr. Hunter, and I wouldn't now know the first name or given name of either of the Mr. Hunters, one from the other.

X-Q. 312. Well, it was Mr. R. M. Hunter who was here on the first day of your testimony. Can you state from recollection, whether you saw him first, in regard to applying for a patent, for the invention shown in this patent, No. 535,591, or whether you saw someone else, or don't you remember who you saw?

A. I positively could not state which of the Hunters I

saw at that interview; but believed and had reason to believe, that I was talking to one of the Mr. Hunters.

X-Q. 313. In what way did you communicate the knowledge of your invention to whoever it was you saw, on first starting this application?

A. I communicated it, as I usually do, by delivering the drawings and sketches that I had made for that purpose; and I may have explained some of the general construction at that time, although I have no recollection of doing so.

X-Q. 314. Do you remember whether any draftsman was present at this first interview in question?

This question, and all other questions relevant to the circumstances which surrounded or constituted the disclosure to the solicitor, of the invention of patent, No. 535,591, prior to February 9, 1894, are objected to as inherently immaterial to the circumstances which surrounded or constituted the disclosure to the solicitor, in the latter part of 1895, of whatever Liddell invention was back of the patent in suit. And if this line of questions is intended simply to probe the memory of the witness, it is objected to; because that probing relates to matters entirely foreign to all the issues of this case. And on this point the attention of counsel and the court is called to section 532 of Wharton on Evidence; which states that "For the mere purpose of probing memory, a witness cannot be cross-examined as to collateral matters, unless the effect of his testimony, if rendered, would go to prove bias or falsity in the main story."

On this point defendant's counsel suggests to the court that no amount of incompleteness or indistinctness of memory of the witness, relevant to the history prior to February 9, 1894, of the invention of the Liddell patent, No. 535,591, would tend to show any bias of the witness in respect of this case, or would tend to show any falsity in the testimony of this witness, relevant to the history of

the latter part of 1895, and the early part of 1896, in respect of the application for the patent in suit.

Defendant's counsel suggests to complainant's counsel, that no man can remember everything that occurred to him during his life; but that that fact does not cast any discredit upon his testimony of facts which he does remember.

For these reasons, defendant's counsel earnestly requests complainant's counsel to discontinue probing the memory of the witness, relevant to events entirely foreign to the history of the patent in suit, and entirely foreign to the application for that patent, and entirely foreign to anything that the witness ever did or said in connection with that application.

Complainant's counsel points out that he is asking about a transaction closely parallel to that relating to the patent in suit, in respect to being a patent application, for paper bag machine improvements, between the same inventor, and the same attorney, assigned to the same Company, and not far distant in point of time; and that the remarkable memory of the witness for matters of minute detail of time and circumstance in connection with application for the patent in suit, can well be tested, and the question of undue stimulation of memory of the witness, considered, in connection with his recollection of the matter now being inquired about.

Mr. Walker replies that the deposition does not show any "remarkable memory of the witness for matters of minute detail of time and circumstance in connection with application for the patent in suit"; but on the contrary the evidence shows that the witness does not remember those matters any more fully, or minutely, than would be naturally expected of him; and Mr. Walker further replies that the application for the patent No. 535,591, was filed almost two years longer ago, than the application for the patent in suit, so that the two transactions were nearly two years different in point of time.

1586

Mr. Walker states to the court that the question whether the memory of the witness, in respect of the history of the application for the patent in suit, has been unduly stimulated, is a point that can be directly investigated, by asking the witness questions, the answers of which will show whether anyone has said anything to him adapted to stimulate his memory; and can also be investigated by taking the testimony of Mr. King, who acted with the witness in making Liddell Drawing, No. 1; and by taking the testimony of every other man with whom the witness has had conversation upon the subject of the history of the application for the patent in suit, or upon the subject of the drawings or sketches which the witness made and furnished to Mr. Hunter, with a view to making that application. Mr. Walker cordially invites Mr. Betts to investigate the question of the "undue stimulation of memory of the witness" in any and all of these ways.

A. I have no recollection of a draftsman being present at the interview referred to, as there was no one introduced to me as such; and I don't believe there was a draftsman there at that time, to the best of my knowledge and belief.

X-Q. 315. Do you remember whether you ever saw any draftsman in connection with this patent, No. 535,591?

A. I have no recollection of seeing any draftsman in connection with patent, or application, or drawings, of the same, at any time.

X-Q. 316. Can you state when you swore to the application papers for this patent, No. 535,591?

A. As I have before stated, this patent is new to me, and it's the first copy I ever saw of it; and I haven't either seen it or heard of it, from the time, it is stated here on this copy, March 12, 1895; and after a lapse of seven years or more, it would take me some time, for to enable me to give anything near the time, when I signed and swore to this application, in a correct and truthful manner.

X-Q. 317. Then, as I understand you, you cannot now state when you did sign and swear to this application for this patent, No. 535,591?

A. I cannot, without a reasonable time to refresh my memory on the same.

X-Q. 318. Can you now state who was the Notary before whom you swore to the application papers for this patent?

A. I believe and understand that one of the Mr. Hunters was the party or Notary, that I signed and swore to this application.

X-Q. 319. You say you believe and understand that. But you don't distinctly remember it, do you, in connection with this particular application?

A. Yes, I have a recollection that Mr. Haverstick introduced me to a gentleman of the name of Mr. Hunter, but which of the Hunters, I don't know, and I didn't know.

X-Q. 320. Well, that was when you first brought this application to Mr. Hunter's office, was it not?

A. Yes, to the nearest of my recollection.

X-Q. 321. Do you remember reading over the specification at Mr. Hunter's office, for this application before you swore to it?

A. I have no recollection at this time, of reading it over, before swearing to it; although in all probability, I did.

X-Q. 322. Do you remember seeing the drawings of this particular application, as prepared; and at the time you swore to the application?

A. I have no recollection of seeing the drawings at that time; although I believe that they were there, so I could see them.

X-Q. 323. What makes you believe that these drawings of this application were there, when you swore to it, so that you could see them?

A. Simply because it is customary for any honorable patent solicitor, to have drawings present to show to the inventor, so that he can compare the specifications with the same ; and I took it for granted that Mr. Hunter was an honorable man in doing business.

X-Q. 324. Well, on those same grounds just stated, do you not believe that the drawings of the Liddell patent, in suit, were there, at Mr. Hunter's office, so that you could see them, at the time you swore to the application for the patent in suit?

A. I have every reason to believe that the drawings were there, in reference to the patent in suit, No. 558,969, at that time ; although I have no recollection now, of seeing the same in connection with the specification.

X-Q. 325. And on these same grounds, do you not believe that the complete specification, descriptive of the drawings, and having claims annexed, was presented to you, for examination and signature, in connection with the application for the patent in suit, and shortly before you swore to the same ?

A. I haven't the least reason to think or imagine in any way, but that the drawings were attached to the specification, and claims, at that time.

X-Q. 326. At the time you signed and swore to the application for the patent in suit ; did you raise any objection to the drawings thereof, or to the wording of the specification and claims thereof ?

A. I did not ; for the reason that I hadn't examined sufficiently, the same, to enable me to make any objections or remarks, at that time.

X-Q. 327. At that time of signing and swearing to said application ; did anybody restrain or prevent you from looking at the papers to such extent as you desired ?

A. No one whatever, to my knowledge, prevented me from examining the same, to any extent.

X-Q. 328. Now referring again, to the application for

Liddell patent, No. 535,591, can you state whether or not, you were in consultation with Mr. Hunter, the attorney on that application, in connection with the putting of it into shape, after the first interview, when you brought it to him, and before you signed and swore to it?

A. I have no recollection of having any interview with Mr. Hunter in reference to the construction of said patent or application; other than the time of taking sketches and drawings there; and executing application for the same.

X-Q. 329. Can you positively testify you did not have such an intermediate interview with the attorney?

A. I could not positively testify at this late day, whether I did or not.

X-Q. 330. Looking at the drawings of that patent, No. 535,591, do they correctly show what you submitted as your invention, in connection with that matter, to Mr. Hunter, for which to make application for a patent?

A. As I have before stated, it would take some time to enable me to state whether it does correspond to the sketches and drawings that I took to Mr. Hunter for this purpose.

X Q. 331. Look at the three sheets of drawings of that patent; are you not very familiar with the general character of machine which they represent?

A. I am, and have some reason to believe so; as I believe that these are drawings taken from the sketches and drawings that I gave to Mr. Hunter for this purpose.

X-Q. 332. Do not those three sheets of drawings represent substantially what you are familiar with, as the Purvis bag machine, (not of course, in absolutely complete detail,) and on which Purvis machine you were working at Philadelphia, at that time, to which is added in the drawings, a slight improvement or novelty, constituting the subject matter of your invention applied for in the patent?

A. This represents a Purvis machine, entirely reconstructed by me, with the exception of using suction boxes, which I was requested to keep to the spirit of his invention, as it was practicable to do.

X-Q. 333. Then what is the difficulty you find in here and now looking at these drawings before you, and forthwith and now stating on the record, whether said drawings do or do not, embody the little improvements in feed and presser rollers which form the subject matter of this application for patent as issued?

A. As I find it necessary for me to be very careful, in what I testify to, and in order to enable me to testify to this question, truthfully and intelligently, I still say that it would take me some time to enable me to do so.

X-Q. 334. We have now had a recess of nearly one hour and a half, during which time, you were requested by me to look over the Liddell patent, No. 535,591, and refresh your memory, as far as you could by reading its specification, and examining its drawings. Can you now, in view of such examination as you have made, answer my question No. 330, as to whether the drawings of that patent, correctly show what you submitted as your invention, in connection with that matter, to Mr. Hunter, and for which, to make application for a patent?

A. After reading over the specification, and comparing the same with the drawings, in the patent referred to, I find they do not cover all the improvements that I made in reconstructing said machine; as I built an entirely new machine from its foundation, and used no part or parts of the Purvis machine, in making same, to the best of my recollection. I made all new, except the construction of the suction boxes, which I built and designed somewhat different from the Purvis, and the means for operating the same; and its different parts, were built more mechanically and practically, than the machine that Purvis had partly constructed. In reference to the time that this construc-

tion was applied for, and the information, if any, that I gave to Mr. Hunter, was simply what I may have given to the draftsman that was sent to the shop where I was building this machine; as to the nearest of my recollection, he took all his drawings and dimensions from this machine, as I had it completed at that time, and I have no recollection of making any drawings and sketches for this construction whatsoever.

X-Q. 335. If the specification and drawings of the application for this patent, No. 535,591, as they are now shown in the patent before you, were not correct, why did you sign and swear to the application for that patent, as you have said you did; before one of the Hunters, as you recollect?

A. I have never testified or said one word that they were not correct, neither now nor heretofore.

X-Q. 336. Then as I now understand you, the specification and drawings of the Liddell patent, No. 535,591, do correctly show what you submitted as your invention, in connection with that matter, to Mr. Hunter, to make application for a patent? They must either show it, or not show it. Which is it?

A. As I formerly stated, that I couldn't intelligently or truthfully say they were correct or not correct, without taking some time, to thoroughly read over and compare the drawings, with the specification, and claims.

X-Q. 337. Well, you have had this patent before you, and been questioned about it, for a considerable time before recess, there was then a recess of one hour and a half, during which time, you were directed to devote all the time you could, to examining this patent, and since recess, you have still had it before you, to examine and answer questions about it. How much more examination do you need to give this patent, whose specification exclusive of claims, covers only about three full printed

patent columns, such as appear in United States printed patents?

A. I would think a reasonable time to examine this thoroughly, and to be able to answer the question as pointedly and correctly as counsel seems to expect me to do, might take me a day; and I doubt very much if counsel could do it himself in shorter time, correctly in all its details.

X-Q. 337½. Referring now to the patent in suit, No. 558,-969, how long an examination did you give to that patent, in connection with your interview with Mr. Walker, on January 22, 1903, before you informed him that this Liddell patent in suit, did not correctly embody the invention you left with Mr. Hunter to be applied for and patented, as you have testified?

A. As near as I can recollect, at that interview mentioned, I think the first thing that Mr. Walker called my attention to, was a model that he had had made, for some purpose, and I think he asked me if that construction was practicable; and I said, Do you mean to restrict the practicability of this construction, as shown in the model? He said Yes, that this model was made in direct conformity to the patent as issued. I said if that is so, a machine constructed exactly like that model would never work. I think he asked me why I thought so. I explained that the forming-plate did not move much more than a quarter of the distance it would have to move, in order to form that bottom, or the bottom of a S. O. S. bag. I don't remember particularly of seeing the patent at that time, or talking the matter over, although it may have been so.

X-Q. 338. Then the matter of this construction and operation of the forming-plate, as shown in the Liddell patent in suit, and whether or not it would work, was first called to your attention by Mr. Walker, and not by you to Mr. Walker's attention. Is that correct?

A. Mr. Walker called my attention to the model he

had constructed, and asked my opinion, and I have before stated, what I have thought of it (or words to that effect). And after he had turned it around a few times and I had seen the operation, I told him then and there that a machine constructed exactly in accordance with that model, could not do the work of forming the bottom of an S. O. S. bag.

X-Q. 339. Did you at that time, or have you since, studied out or suggested any mechanical change which could be made in that model, which would render the mechanism operative, in connection with a paper bag machine, of the kind shown in the patent in suit?

A. I haven't studied out, nor thought particularly of the necessary changes, that might be necessary to make that construction of a machine commercially useful. But I would say that in my opinion, that could be made operative to a certain extent; but would never be as practicable and mechanical, as I showed in the Liddell Drawing, No. 1, in my opinion.

X-Q. 340. Then as between the mechanism shown in Defendant's Exhibit, Model of Liddell patent, No. 558,-969, and the mechanism shown in Defendant's Exhibit, Model of Liddell Drawing, No. 1, when used in connection with paper bag machines of the general character of that shown in the Liddell patent in suit, you consider the Model of Liddell Drawing, No. 1, as a better and more operative mechanism than the mechanism of Defendant's Exhibit, Model of Liddell Patent, No. 558,969, as I understand you?

This question is objected to as not proper on cross-examination; because it is not relevant to the direct testimony of the witness; and defendant's counsel will insist on the hearing that the answer is not binding on the defendant; but is binding on the complainant, whatever that answer may be.

Defendant's counsel notifies complainant's counsel that

1594

the comparative merits and demerits of the two models, and of the mechanisms illustrated thereby, will be made the subject of elaborate expert testimony of other witnesses on behalf of the defendant; and that this witness has not been put on the stand for any such purpose as that.

A. I do, from all my experience, think that a machine constructed after the principle of the Liddell Drawing, No. 1, will be a more practicable and commercial machine, than the construction of the drawings of patent, No. 558,969, for several reasons: First: In all my experience in mechanics I have found a reciprocating or oscillating motion to be a detriment to the machine, where high speed is necessary. Also, the tear and wear of an oscillating construction, is more expensive to keep in order, and the results in a general way are never as good as a continuous rotary motion, where it is possible to apply a continuous rotary motion, to take the place of a reciprocating or oscillating motion.

X-Q. 341. What change if any, would you suggest in the mechanism shown in Liddell Drawing, No. 1, or the model illustrating that drawing, to make it operative in connection with the cylinder of the Liddell patent, No. 558,969, as a means for operating the former-plate and carrying out the functions thereof? Or does it need any change in your opinion?

A. As far as I can judge now, this construction of Liddell Drawing, No. 1, applied to the cylinder of the Liddell patent, No. 558,969, would require no change whatsoever, if I understand the patent referred to.

X-Q. 342. Then if you did in fact submit to Mr. Hunter and the draftsman at that first visit to their office, in Philadelphia, in connection with the application for this patent, a sketch embodying what is shown in Liddell Drawing, No. 1, or substantially that, you then submitted

what you believe to be an operative mechanism. How is that?

A At the time referred to, if I understand myself right, and remember correctly, what I took to Mr. Hunter at that time, and I am pretty positive I do, that it was not substantially the same as Liddell Drawing, No. 1. It was somewhat radically different.

X-Q. 343. Well, when did you get up what is shown in Liddell Drawing, No. 1?

A. To the nearest of my recollection; it was some time in January this year that I made a paste-board model, and some rough sketch, also some explanation, which I gave to Mr. King, at my house, on Sunday evening, about the time stated.

X-Q. 344. And that was all after you had had your first interview with Mr. Walker, defendant's counsel in this case? Was it not?

A. It was certainly, to the best of my recollection.

X-Q. 345. Now, if the Liddell Drawing, No. 1, is somewhat radically different than what you took to Mr. Hunter, at the time you first put in his hands, in Philadelphia, the drawings and sketches to start this application; what is that somewhat radical difference, between the original Hunter sketch and this which you produced after your interview with Mr. Walker? Or do you remember the difference?

A. The radical difference that I refer to, between the Liddell Drawing, No. 1, and what I believe I took to Mr. Hunter, for this purpose, consists in operating the forming-plate by means of a continuous revolution, by means of obliptic or eccentric gears, and intermediate gears, to operate the same, and a continuous rotary motion. That may not be all; but that is all I remember just now.

X-Q. 346. How long was your interview with Mr. Walker, on January 22, 1903, at this office?

A. To the nearest of my recollection, about an hour. It might be less or more.

X-Q. 347. Was a copy of the Liddell patent in suit, No. 558,969, shown you by Mr. Walker, on that occasion?

A. I can't positively be sure, at that interview whether a copy of said patent was shown to me or not.

X-Q. 348. Tell me the first time you remember and are positively sure of seeing and examining a copy of the Liddell patent in suit, during this present year, viz.: since January 1, 1903?

A. I am not positively sure at which of the interviews with Mr. Walker I was shown the patent in litigation, or a copy of the same.

X-Q. 349. Tell me when it first dawned upon you or flashed upon you, after inspection of the Liddell patent in suit, that this was not for the invention that you had put in the hands of Mr. Hunter, to patent for you, or your assignee, the Eastern Paper Bag Company, at Philadelphia, during the Fall of 1895?

A. To the nearest of my recollection; when it first dawned upon me, or I had any reason to believe, that the patent, as granted, was not in accordance with the sketches and drawings that I took to Mr. Hunter's office, for the purpose heretofore specified, I think was when Mr. Walker showed me the model of said patent in litigation: and I right at that time, told him that it didn't seem to me, to be in accordance with the drawings and sketches that I took to Mr. Hunter, for the machine of the construction, at that time. He asked me several questions, I can't remember exactly what they were, but they were in reference to my opinion if that model of that construction, was practicable; this model being in correct conformity to the patent, as granted. He asked me if I would make a drawing, of what I did take to Mr. Hunter, for that purpose. I said, yes, I think the following day was Sunday, and I made some sketches, and after working for some little

time, I concluded that it would be easily understood what I meant, in reference to the difference of constructions, heretofore stated, by making a model of the same ; so I did get some paste-board that same Sunday, and cut out cams, and gears, showing the gears as represented in Liddell, Drawing, No. 1, which are obliptic gears. I also cut out some paste-board, to represent the cylinder, and the gear that works in conjunction with the cylinder, and I think, all the gearing that is represented in this Liddell Drawing, No. 1. That same evening, the draftsman took them with him. That is the last I saw of them, till I saw them here in the shape of a drawing, and I understand, that this is the blue print, taken from the same, and is marked Liddell Drawing, No. 1.

Adjourned until Wednesday, March 25, 1903, at 11 o'clock in the forenoon.

Wednesday, March 25, 1903, 11 o'clock A. M. Met pursuant to adjournment ; counsel present as before.

X-Q. 350. Please hear read, X-Q. and Answer 349, and then state whether, according to that answer, and your present recollection, it was not before you had examined the patent in suit, No. 558,969, at any interview with Mr. Walker, that you told him, Mr. Walker, that the model he showed you, didn't seem to you, to be in accordance with the first drawings and sketches you took to Mr. Hunter, in connection with the application, for this patent?

A. To the best of my knowledge and belief, still; I believe my former answer to this question, to be correct ; that the first time my attention was called to the patent, as granted, that is the patent that is in litigation, was at another interview after seeing the model of the same, that I made remarks heretofore stated, to Mr. Walker, in reference to said differences of patent as appears, and what I did intend it should be, or should have been, in

patent as issued; although it is possible that patent referred to, was shown to me at that time.

X-Q. 351. You cannot positively remember, can you, whether at that first interview of January 22, 1903, when you say Mr. Walker showed you the model, he did or did not show you the patent in suit?

A. I cannot positively at this time, truthfully say whether he did or did not show me that patent at that time.

X-Q. 352. Then so far as you can actually remember or testify, you reached the conclusion that what the model showed was not part of the invention you communicated to Mr. Hunter, in connection with the application for patent in suit; and reached that conclusion before you had examined the patent in suit, at this interview with Mr. Walker?

A. To the nearest of my recollection, I reached that conclusion, immediately after seeing the model referred to, and I believe before I had seen or examined the patent referred to.

X-Q. 353. And then, when at some time after seeing this model, "Defendant's Exhibit, Model of Liddell patent, No. 558,969" you did examine the drawings and specification of the patent in suit, and found said drawings to correspond in certain respects with the model, you were confirmed in your opinion, or at least discovered, from such an inspection, that the patent did not embody what you now remember yourself, as submitting to Mr. Hunter, in the way of sketches and drawings. Is that about it?

A. To the nearest of my recollection, I did not at that time, read over or examine the specification and claims of said patent, but looked at the drawings of the same; and was convinced as far as I can remember, and I think I am pretty sure, that the drawings in the patent in litigation, and what I sketched and drew up for Mr. Hunter, for the purpose of getting patent on the same, which I refer

to, patent in litigation, was not in accordance to the sketches and drawings I left Mr. Hunter, for that purpose.

X-Q. 354. Then when you after this first interview with Mr. Walker, on January 22, 1903, came to examine the drawings of the patent in suit, and found they did not contain figures or constructions corresponding identically with the sketch you believe you left with Mr. Hunter, of the nature of that Liddell Sketch No. 1, you reached the conclusion that the patent drawings did not show what you had invented or communicated to Hunter? Is that about it?

A. To the nearest of my recollection, at the interview I had with Mr. Walker, referred to, I don't think that we examined the specification, claims and drawings, to any extent, whatever; but simply looked at the model, and talked over the practicability of it, as it was made; and as I have heretofore stated, after asking my opinion of the same, I told Mr. Walker that I thought it was impracticable, if the model was made in correct conformity to the patent as issued; and I then and there came to the conclusion, after examining the drawings of the patent referred to, No. 558,969, that the drawings prepared by Mr. Hunter, were not exactly in conformity to the sketches and drawings that I left with him for said purpose.

X-Q. 355. You refer in your last answer, to the sketches and drawings you left with Mr. Hunter, in Philadelphia, at what we have designated as your first visit there, to start these applications, in the Fall of 1895, do you not?

A. I do.

X-Q. 356. You did not find in these drawings of the Liddell patent, a figure which corresponded identically with the Liddell Drawing, No. 1, which you have testified you remember submitting, or something like it, to Mr. Hunter; and not finding that figure or representation, you

reached the conclusion that the Liddell patent in suit did not embody your invention, as communicated to Hunter? Is that the fact?

Mr. Walker requests the Examiner to note that whenever defendant's counsel was about to interpose an objection, to any question since X-Q. 236, he has requested the witness to retire from the room, while that objection was being interposed; and that the witness has thus retired in each case. Mr. Walker requests the Examiner hereafter, to specially note the fact that the witness retires from the room, in each instance, at the time of that retirement, when Mr. Walker is about to interpose an objection; and that the witness was asked to retire, and did retire, as soon as X-Q. 356, was put to him.

And now Mr. Walker objects to X-Q. 356, because it asks the witness whether he "reached the conclusion that the Liddell patent in suit, did not embody your (his) invention, as communicated to Hunter"; and because that inquiry involves the question whether the invention communicated to Hunter, (and which the witness has repeatedly testified to be represented by Liddell Drawing, No. 1,) is substantially the same, or substantially different, from the invention shown in figure 1, of the Liddell patent, No. 558,969, and in "Defendant's Exhibit, Model of Liddell patent, No. 558,969"; and because that question has no relevancy to the direct examination of this witness; and because it is a question upon which he has not been shown to be qualified to express an opinion, as a scientific expert.

Mr. Walker again reminds Mr. Betts, that the essential points of the direct examination of this witness, are few and simple; consisting in his testimony that the drawing or sketch which he delivered to Mr. Hunter, or to his draftsman, back of the patent in suit, was like Liddell Drawing, No. 1, and was not like Figure 1, of the Liddell patent, in the respects in which Liddell Drawing, No. 1,

and Figure 1, of the Liddell patent, plainly appear upon their faces to differ; and in his testimony that he did not *contrive, or otherwise produce,* the cam K, the rod k, the link k^2, or the arm connecting that link with the gear M' of figure 1, of the Liddell patent; but did contrive the "obliptic" gear K, and the "obliptic" gear K^2, of the Liddell Drawing, No. 1, and the other parts shown in that drawing; and did present to Mr. Hunter, a crude sketch of what he had thus contrived.

Mr. Walker reminds Mr. Betts that this cross-examination has now continued nearly five days, and he suggests that it contains but few questions which relate to the foregoing essential points of the direct-examination; but is made up mainly of statements and questions and arguments quite foreign to those few essential points. And Mr. Walker respectfully requests Mr. Betts to hereafter confine his cross-questions to the subjects of the direct examination.

Complainant's counsel noting that it has taken just about twenty minutes to put down Mr. Walker's above statement on the record, suggests that valuable time will be saved if defendant's counsel will desist from the above method of prolonging the examination.

A. After looking at patent referred to, No. 558,969, I did not find a drawing or figure that corresponded identically with the Liddell Drawing, No. 1; and I did not reach that conclusion on account of not finding it, neither did I reach that conclusion, on account of being unable to find my original drawings and sketches which I gave to Mr. Hunter for that purpose. But it simply flashed on my mind, after looking at the drawings and model for a minute or two, that there was something wrong; and after a minute or two, I explained to Mr. Walker, that to the nearest of my recollection, I designed these drawings and sketches of a rotary construction, and not as shown in the drawings of patent, No. 558,969. Before I forget, I would

like to state what I did intend to state, the other day, if counsel will permit; and that is, that I think and believe, that counsel has several times, during my examination, put questions to me in a very compound and complicated manner; and I think it is done simply for the purpose and object of getting me excited and nervous, embarrassed, and, if I be excused to use the term, "rattled"; for the object, and purpose, as I believe, of getting me to say something that would probably contradict my previous testimony, or that I may say something that will be untruthful; and as I am simply a witness in this case, and no expert in this case, it would be a great favor, if counsel would put questions to me, a single question at a time, and in as simple a manner as possible, so as to enable me to answer them truthfully and intelligently.

X-Q. 357. You would like plain, simple, easy questions that you clearly understood; such as were asked you on the direct examination, by the learned counsel for the defendant, is that it?

A. I would prefer to have questions given me in that manner; although I don't think that counsel, Walker, confined himself very strictly to do so.

X-Q. 358. And I suppose if we sat down together and consulted prior to your giving your testimony each day, as to what my questions would be, and how you would answer them, that arrangement would make it easier for you to testify, would it not?

A. I don't quite understand the question. Does it mean to consult me or the other counsel? He didn't say whether, by consulting me, or counsel, Walker; so I don't know how to form my answer.

X-Q, 359. I am sorry that your change of employers has prevented me from calling you as a witness for the complainant; as I had fully expected to do, in connection with complainant's case, and you would then have had the benefit of prior consultation with me, and possibly simpler

and more direct questions; but I must make the best of the situation, in spite of your protest. Do not the drawings of the Liddell patent in suit, and the Liddell Drawing, No. 1, show what you understand to be a revolving cylinder, lettered C, in both cases?

A. They do.

X-Q. 360. Liddell Drawing, No. 1, and the Liddell patent drawings, have the same lettering on them, for corresponding parts, so far as they show corresponding parts, is that not the fact?

A. Yes.

X-Q. 361. Now speaking broadly, the difference between what is shown in Liddell Drawing, No. 1 and what most nearly corresponds thereto, in the drawings of patent, No. 558,969, is that the former-plate shown in Liddell Drawing, No. 1, is arranged to be completely revolved in connection with, and above the cylinder C; whereas, the former plate of the Liddell patent, is arranged to be operated backwards and forwards above the cylinder C, thereof?

A. Yes, the shortest explanation I can make to that, is that as shown in Liddell Drawing, No. 1, it is a continuous rotary motion; and as shown in Liddell patent, No. 558,969, it distinctly shows a reciprocating or oscillating motion for said former-plate.

X-Q. 362. That being so, and the difference as you state being the difference of motion given to the former-plate of Liddell Drawing, No. 1, and to the former-plate of the Liddell patent, No. 558,969, is the result of difference of mechanism (corresponding in letter as you have just above stated) on these drawings, is that not true?

A. Exactly. The difference of the mechanism makes the difference between the Liddell Drawing, No. 1, and the copy of patent, No. 558,969.

X-Q. 363. Now in Liddell Drawing, No. 1, the movement of revolution is given to the former-plate, by the

1604

obliptic gears, K and K^2, operating the true gears M′, M,M and N ; whereas in the drawing of patent in suit, the movement of the former-plate,is caused by the cam K, the rod k, the link k^2, operating the gears M′, M,M, and N ?

The witness retires.

This question is objected to, because it calls upon the witness to give expert testimony upon an abstruse question, in mechanics and geometry, relevant to the parts which in the Liddell patent, No. 558,969, move the former-plate E ; and because that subject was not attended to in the direct examination; and because the witness does not appear to be qualified to make such complicated mechanical and geometric analysis as is involved in the question ; and because he did not himself contrive, that mechanism of the Liddell patent, No. 558,969, which is specified in the question, and has testified that he did not know the construction of that mechanism, until a few weeks ago, with any particularity.

A. Yes, if I understand the question thoroughly, I would briefly answer it, by stating that it is exactly as explained ; that is, that in Liddell Drawing, No. 1, the forming-plate is operated by the obliptic gears shown in Liddell Drawing, No. 1, with the train of gears as shown, for the purpose of operating the forming-plate, also cam as shown in said drawing, for raising the two arms, and allowing them to lower again, as shown in Liddell Drawing, No. 1. Whereas, in the Liddell patent, No. 558,969, the difference consists in the mechanism for operating said former-plate ; which shows very clearly in copy of patent, now in litigation, that it is operated by two cams, and it is of a reciprocating and oscillating construction.

X-Q. 364. Considering Liddell Drawing, No. 1, and that it illustrates a revolving cylinder, and also a revolving former-plate, caused to revolve by the mechanisms thereon shown ; what is the least change you can suggest in the mechanisms operating the former-plate, which would cause

it to oscillate above the cylinder C, instead of revolving above it?

A. The necessary changes to make it oscillate, in place of revolving, in my estimation, would be to disconnect the two obliptic gears, and operate the train of gearing which operates the forming-plate, by means of an arm and link, operated by a cam, on the shaft L, of the roll above the cylinder; and dispense with the obliptic gears, by putting true gears in the place of one of the said obliptic gears.

X-Q. 365. Is not that about what is done as shown by the drawings of the Liddell patent, in suit, resulting in a movement of oscillation of the former-plate above the revolving cylinder?

A. It is pretty near to it, with the exception that it would require no obliptic gear fastened to the shaft L, to operate the same.

X-Q. 366. Well, has the drawing of the Liddell patent, any obliptic gear, such as you speak of in your last answer?

A. If you refer to patent in litigation, it has not, as shown.

X-Q. 367. Now, referring to the drawings of the patent in suit, showing revolving cylinder, and oscillating former-plate; you would not say, would you, as a mechanic, that the exact mechanisms shown in those drawings, to oscillate the former-plate above the revolving cylinder, were the only mechanisms by which that operation could be produced?

A. In answer to that; I would say that that may be accomplished, in a number of ways; that is to form a bag of that construction, it could be done probably as successfully in other constructions.

X-Q. 368. Suppose the idea was of a revolving cylinder, and an oscillating former-plate operating above the cylinder; would you not say, as a mechanic, that probably

a large number of different devices could be gotten up which would act to oscillate the former-plate above the revolving cylinder, and form the proper fold, and yet which would not be the same as the exact means or mechanisms shown in the drawings of patent, No. 558,969?

A. I think it quite possible that other means could be got up, to fold said bag properly; and I have myself sketched out and studied out other plans for that purpose. I would like to state here, before I forget it, that according to patent in litigation, No. 558,969, and also patent No. 564,288, I will call the attention of the court, to one or two points, whereby I think it will show the possibility and liability of the draftsman, and also the patent solicitor making mistakes. As a matter of fact, it is a supposable case, that when a man is constructing or inventing a number of devices, for the same purpose, and at the same time, without any interruption, he naturally would improve upon each construction, as he advanced. And to prove what I want to say, if the court will look at patent, No. 564,288, which is one of the first constructions, that I made for this purpose of making bags, it will find that there is a movable gripper, on both ends of the forming device, that forms the bottom; and on patent, No. 558,969, it shows a stationary finger, situated on the lower part of the forming-plate, to catch the said end of the tube, in order to hold it in position, while the bottom is being formed, which I, as a mechanic, declare absolutely useless. Thereby it will stand to reason, that I never drew or sketched such a construction of a means of holding the bag, at one end, while the bottom is being formed. It simply shows the possibility and liability, of all the difference there is from what I designed it to be, in my sketches and drawings, and what it now shows in the patent issued. That is simply one of the number of mistakes or misunderstandings that the draftsman, or the patent solicitor, may have made.

Last part of answer objected to as volunteered and not responsive.

X-Q. 369. Now, if you desire to change the structure shown in the Liddell patent, No. 558,969, so that the former-plate should continuously revolve, instead of oscillating above the cylinder; what is the least change of mechanism, to operate the former-plate, you can suggest, from that shown in the drawings, and to produce this different and revolving operation?

The witness retires.

This question is objected to; because it calls upon the witness to invent or otherwise contrive, a revolutionary change in the structure shown in the Liddell patent, No. 558,969; and which requirement is quite remote from proper cross-examination of this witness, in this case.

A. In answer to that question; as near as I can think at present, it would require the same operations as are shown in Liddell Drawing, No. 1; that is, in place of operating it by two cams only, (I refer to the patent in litigation,) it would be necessary to gear it as shown in Liddell Drawing, No. 1, by two obliptic gears, operating the former-plate, by intermediate gears, and a cam to raise, and allow the arms to come back to their normal position. The absolute necessity of applying obliptic gears is for the purpose, and the sole object of the forward end of the forming-plate to travel in exact unison, or in other words, at the same speed, as the cylinder does, while the bottom of the said bag is being formed that far.

X-Q. 370. Referring to the Liddell Drawing, No. 1, you would not assert, would you, that the mechanical method therein shown, for revolving the former-plate, above the revolving cylinder, and in connection therewith, was the only mechanical method for affecting such revolution of the former-plate?

A. I know of no means at present, that would perform that function so simply and perfectly, as the means shown

in Liddell Drawing, No. 1 ; although I do not assert that that is the only means of accomplishing the same result ; although I doubt very much, that it ever could be accomplished in a manner to operate perfectly, by any other mechanism.

X-Q. 371. When the drawings of the Liddell patent, No. 558,969, as they appear in the Patent Office copy before you, are shown you, do you find any difficulty in seeing that they show an oscillating or reciprocating former-plate, and mechanism which acts to oscillate the former-plate ?

A. I have no difficulty in reading and understanding copy of patent, now in litigation ; and see very clearly that, copy of said patent shows an oscillating or reciprocating motion.

X-Q. 372. Have you any difficulty in seeing, when you look at the drawings of the Liddell patent, No. 558,969, that they do not show a revolving former-plate, operated as is that shown in Liddell Drawing, No. 1 ?

A. I haven't the least difficulty neither in seeing, nor explaining, that the drawings of said patent, in litigation, No. 558,969, does not show a revolving construction ; but shows an oscillating or reciprocating construction.

X-Q. 373. As you have read the specification of the Liddell patent, in suit ; does it describe to you, an oscillating or reciprocating former-plate, such as is shown in the drawings, and in connection therewith ?

A. I think I have read the claims and specification thoroughly enough to understand them ; and it clearly shows to me, both by drawings and specification, and it is worded clearly and intelligently enough (that is the specification) that it explains said construction to be an oscillating construction.

X-Q. 374. And it is also perfectly clear to you, having read the specification, that this, in connection with the drawings, does not describe a revolving former plate and

its operating mechanism, such as is shown in Liddell Drawing, No. 1? Is that not true?

A. It explains to me very clearly that patent in litigation, does neither show in the drawings, nor explain in the specification that it is of a revolving construction; but quite otherwise, shows a reciprocating or oscillating motion.

X-Q. 375. Suppose the drawings and specification presented to you for signature and to swear to, at Mr. Hunter's office on January 7, 1896, were the same in figures and the same in words, would you have found any more difficulty in understanding them then, than you have in understanding them now?

The witness retires.

This question is objected to; because it erroneously assumes that some drawing was presented to the witness for signature in Mr. Hunter's office on January 7, 1896; whereas, it appears on the face of the patent, that said drawings were never signed by the witness, and it also appears in the direct examination that the witness has no recollection of ever having seen the drawings of the Liddell patent in suit, at any time, before that patent was granted and issued; and whereas, there is much circumstantial evidence in the case, already, tending to show that he never did see those drawings till some years after the patent was issued, and never examined them, particularly, until January, 1903.

A. If I had read over the specification and drawings then, as thoroughly, as I have since I was called as a witness, in this case; I see of no good reason why I wouldn't have found the same objections then as I do now, in reference to all the differences that I find in the patent as granted, and what I believe was shown in the drawings and sketches that I delivered to Mr. Hunter, for that purpose; that is the drawings for patent, No. 558,969.

Answer objected to as not responsive.

X-Q. 376. You have not answered my question; which was substantially whether you can give any reason why you would have found any more difficulty in understanding the drawings and specification, of this patent, No. 558,969, in the form of an application, presented to you to sign and swear to, at Mr. Hunter's office, January 7, 1896, than you now find in understanding them?

The witness retires.

This question is objected to; because the answer to X-Q. 375, was fully responsive to that question; and because this question is another instance of the inquiries calculated to "rattle" the witness, which he, himself, criticised, and asked to be omitted, in his reply to X-Q. 356.

A. I can give no reason why I should not have discovered the mistakes (that I have pointed out) at that time, as well as now; if I had devoted the same amount of time, to reading and studying the said application, before swearing to and signing the same, than I do now; as I believe and understand that this copy of patent, No. 558,969, is a true duplicate containing the same words, and also the same drawings identically, as appear in the copy of patent, No. 558,969, as I signed and executed in Mr. Hunter's office at that time, for that purpose.

X-Q. 377. Is not your memory for dates pretty bad?

A. Well, I consider and have good reason to believe, that my memory is about as good as the average man's.

X-Q. 378. Here is an example of how bad your memory is as to dates. Do you remember in your testimony, stating that you sent me this drawing marked "Complainant's Exhibit, Liddell Original Sketch" now shown you, and also the two sheets containing bicycle sketches about which you have testified, your statement being that you sent them to me, about a year ago; it might be more than a year ago (I am not quoting your exact words, only the substance). Now, here is a letter signed by you, dated No-

vember 24, and addressed to Mr. Coburn, in which you say "I have sent the old sketches I made at that time, that you speak of in your letter to Mr. Betts". Please state if that letter was written by you, and whether it was not written on November 24, of last Fall, 1902?

A. This is my handwriting, and to the nearest of my recollection, I sent Mr. Betts the sketch referred to, about a year ago, as I have formerly stated; and it may have been some months afterwards that I answered Mr. Coburn, in reference to the same.

X-Q. 379. Do you remember calling on me at my office, 6th Floor, Equitable Building, 120 Broadway, New York, in relation to this Liddell patent, in suit, and about this suit?

A. I remember it distinctly, visiting counsel's office, in reference to this suit. I understood it as such.

X-Q. 380. Well, when did you make that visit to my office?

A. As near as I can remember, it was somewhere about a year ago, and previous to my sending the sketch referred to, which is Complainant's Exhibit, Liddell Original Sketch.

X-Q. 381. Is it not your recollection that at your visit to my office, you were asked by me, whether you had or would look for any original sketches you had in connection with the application for the patent in suit; and that you promised to do so; and after this visit, you made to my office, you did send me this sketch Complainant's Exhibit, Liddell Original Sketch, and also therewith, the bicycle sketches referred to?

A. I perfectly well remember at that interview at counsel's office, that he requested me to find any sketches or dates, or anything that would give any light on the subject, pertaining to suit in litigation; and I promised that I would do my utmost to hunt up amongst my old sketches, note-books, or anything I could find, that would be of any

assistance in relation to this litigation. I did find the sketch referred to, and wrapped around it, I had a sketch of a bicycle, which I thought was plain wrapping paper, at the time, and either mailed or sent the same to counsel's office, at the time stated.

X-Q. 382. And these sketches were sent to me, after that interview you had with me at my office, were they not?

A. They were.

X-Q. 383. And you never had but one interview with me, at my office, did you?

A. Never but one, to my recollection.

X-Q. 384. Now, in what month of 1902, was that interview you had with me at my office, 120 Broadway, New York, in relation to the patent in suit, and this litigation?

The witness retires.

This question is objected to; as not proper cross-examination, because it relates entirely to the question of the correctness or incorrectness of the memory of the witness, in respect of a date, which date is immaterial to the suit.

In support of this objection, the attention of the Court is called to section 532 of Wharton on Evidence, where it is stated, that cross-questions which are put for the purpose of probing the memory of the witness, on collateral matter, are generally inadmissible. Furthermore, it is well known that some men have good memories, for facts, with unreliable memories for dates; and therefore, the question whether the memory of this witness for dates, is weak or is strong, is irrelevant to this suit, particularly because there is no disputed question of dates, involved in this suit.

A. I would like to state that I don't want to be confined to any particular date, as I kept no record of that interview, and not thinking that I would ever be called upon in this case, as a witness, and being busy at other

business, I didn't impress it upon my memory, and will simply answer the question, the same as I have heretofore: That is, to the nearest of my recollection, it was about a year ago; it may be more; it may be less.

X-Q. 385. Well, about a year ago was March, 1902. Was it in that month you came to my office, and had this interview, as near as you can recollect?

A. I couldn't positively state whether it was in March, or which month it was in.

X-Q. 386. Are you sure it was not in the Fall of 1901; or at any rate before Christmas of 1901, that you came to my office?

A. I am not sure.

X-Q. 387. Are you sure it was not before the Fourth of July, 1901, that you came to my office, and had this interview?

A. I am inclined to think that it was not before the month of July; but I have no recollection of the particular time.

Adjourned until Thursday, March 26, 1903, 11 o'clock A. M.

Thursday, March 26, 1903, 11 o'clock A. M. Met pursuant to adjournment; counsel present as before.

X-Q. 388. I have before me, a book containing entries in my own handwriting, and kept by me, from day to day, in connection with charges for professional services; and I find in that book, on the date of September 8, 1902, in my own handwriting, an entry as follows:

"8. Paper bag cases, interview (Liddell and Ward) 1 letter (Coburn)".

Opposite are two memoranda of amounts charged, one for the interview, and the other for the letter. The year 1902, appears on the corner of the facing page, in the book, as throughout, and the month Sept., at the top

1614

of the page containing the entry, this entry being the third on that page. In view of the above statement in regard to my memoranda; do you deny that the interview you had with me, at my office, in relation to this Liddell patent case, and matters concerning it, was on September 8, 1902?

A. I would say that I have prepared myself by refreshing my memory to answer that question, if called upon so to do; and will testify to the same without any reference to counsel's explanation of the same. By thinking it over last night, and remembering what work I was doing at that time, and where I was situated, doing said work; I recall now that it was in the latter part of the Summer or early part of the Fall of 1902.

X-Q. 389. I find in my firm letter-press copy-book, Vol. 74, pages 648 to 680, a press-copy of a typewritten letter, signed by me personally, and bearing the date of September 8, 1902, and addressed to Charles F. Coburn, Esq., 100 High Street, Boston, Mass.

The first two paragraphs of that letter, as press-copied, are as follows:

"*Dear Sir.*—Mr. William Liddell called at my office to-day, with Mr. Ward, and I had a talk of some length with him, going over the matter of what evidence he would be likely to find to date back the invention of his patent sued on, and also questioning him in regard to his interviews with Mr. Elsas."

"In regard to the Elsas interviews, he stated that they had been ten or a dozen in number, within the last two years, as he remembered, and one of them within about six months. I found upon close questioning, that the Liddell patent had been discussed at a late interview, but he claimed that it was in regard to operativeness, and that nothing was said about the date of his invention. What if anything, Mr. Elsas may have derived from these interviews, is not made apparent; but it seems clear that Mr. Liddell should not, while the case is pending, talk about

his patent to anyone, except those immediately connected with our side of the case, and I urged this upon him, and hope you will also, as very likely you already have, although he did not so state to me."

The rest of this letter, contains professional advice to Mr. Coburn and confidential discussion of matters connected with this case, and does not in anyway relate to fixing the date of the interview, or relate to interviews with Mr. Elsas; and I do not desire to submit it to either defendant's counsel, or yourself. On hearing the above extract, have you any doubt that the Interview you had with me, was on September 8, 1902?

The witness retires.

Mr. Walker objects to this extraordinary method of getting into this record, unsworn statements made by complainant's counsel, to the president of the complainant company, while suppressing other statements made by the same counsel to the same president, in the same letter; for the following reasons:

The date of the interview between complainant's counsel and Mr. Liddell, is wholly immaterial to the suit.

The witness has already testified that that interview occurred in the latter part of the Summer, or early in the Fall of 1902; so that there is no occasion whatever to prove that the exact day on which it occurred was on September 8, 1902.

It is therefore apparent, that the ostensible reason for inserting a portion of the letter in the record, was not the true reason.

The contents of the inserted portion of the letter, indicates that the real motive for inserting it in the record, consists in the fact that it makes some statements relevant to conversation between the complainant's counsel, and Mr. Liddell, the witness.

In so far as those statements purport to set forth, what complainant's counsel said to Mr. Liddell, they are ob-

jected to as immaterial ; and also as not proved, according to the law of evidence.

In so far as those statements purport to set forth what Mr. Liddell said to complainant's counsel, they are objected to, because they are not presented under oath.

The extracts from the letter, are objected to because the letter is not produced and put evidence, or marked for identification, or shown to defendant's counsel ; and because those extracts purport to constitute only some parts, and not the whole of the contents of the letter.

Complainant's counsel now presents, for the examination of defendant's counsel, if desired, the page No. 678, of letter book referred to, containing the first page of this letter, and from which the quotation in the above question, has been made. He also asks the Examiner to mark said page for identification ; but this presentation and marking refers specifically and only to that particular page, for reasons above stated.

Defendant's counsel admits that the two paragraphs quoted in X Q. 389, from the press-copy in question, were contained in a letter written by complainant's counsel, September 8, 1902, to Charles F. Coburn, Esq., 100 High Street, Boston, Mass. ; and makes that admission in order to save the trouble of marking the page for identification, and producing it hereafter. But defendant's counsel, having made that admission, does not withdraw any of his objections to X-Q. 389.

A. I have not the least reason to doubt but that interview occurred on that day mentioned by counsel.

X-Q. 390. Is it a fact, to the best of your present recollection, that in the period of about two years, prior to that interview of September 8, 1902, with me, you had had ten or a dozen interviews with Mr. Herman Elsas ; and that you so stated to me at that interview ?

A. In answer to that question, by refreshing my memory: I would judge that I had over twenty interviews with Mr.

Elsas during that two years, and that all the interviews as near as I can recollect, was at the request of Mr. Coburn.

X-Q. 391. Is it not a fact, that at least one of those interviews with Mr. Elsas, was within about six months before that interview of September 8, 1902, and that you then so stated to me?

A. To the nearest of my recollection, the last interview I had with Mr. Elsas, before Sept. 8, 1902, was within six months before that time. It certainly was within six months.

X-Q 392. Is it not your best recollection, that you had several or a number of interviews with Mr. Elsas, within the period of six months prior to September 8, 1902, the day you met me?

A. To the nearest of my recollection, I think I may have had two or three interviews during the six months prior to the time that I was requested by counsel to call upon him.

X-Q. 393. Now referring to one of those interviews, between you and Mr. Elsas, I say in this letter of Sept. 8, 1902, and in regard to my interview with you "I found upon close questioning, that the Liddell patent had been discussed at a late interview, but he claimed that it was in regard to operativeness, and that nothing was said about the date of his invention". That means of course your invention; will you deny that you did, at one of those interviews with Mr. Elsas, discuss the Liddell patent in suit, and discuss it with him, in regard to operativeness; and will you deny that you told me on September 8, 1902, in the presence of Mr. George R. Ward, now in this room?

The witness retires.

This question is objected to; because it seems to imply that the statement that the Liddell patent had been discussed in regard to operativeness, in a late interview be-

tween the witness and Herman Elsas, is contradictory to something that the witness has testified to.

The question is also objected to because according to Section 449, of Greenleaf on Evidence, it is a well settled rule, that a witness cannot be cross-examined as to any fact which is collateral, and irrelevant to the issue, merely for the purpose of contradicting him by other evidence; and because the question whether the operativeness of the Liddell patent in suit, was discussed prior to September 8, 1902, between the witness and Herman Elsas, is collateral and irrelevant to any issue in this case; and that if a question is put to a witness, which is collateral or irrelevant to the issue, his answer cannot be contradicted by the party who asked the question, but is conclusive against him.

A. I haven't the least reason to deny anything that I have formerly stated, or am about to state in reference to the case; as I consider that I have acted very honorably to both parties, in this case; and would now state that I remember distinctly at the interview referred to, at counsel's office, that he made a lengthy introductory explanation of the case, as far as it had gone at that time, and asked me several questions in relation to same. And I believe one of them, was if I had seen Mr. Elsas, or talked with him about this matter; that is referring to patent in litigation. I told him that I had. He asked me what we said. I told him that I had been shown by Mr. Elsas, a photograph and a cut of the Continental machine. I think I described it somewhat at that time, as far as I knew. I then told him that I had talked with him in reference to the Liddell patent; but the patent referred to, or the patent we spoke of at that time, and which I was trying to sell him, by a request of Mr. Coburn was the machine that I had reconstructed in Philadelphia, which is known as the Purvis machine. I spoke of it very highly to Mr. Elsas, and told him after it was completed,

that I had operated it myself, for some days, and to the nearest of my recollection, I run off about two hundred thousand bags on said machine. I don't remember exactly now at that interview, with counsel, explaining to him, that I had talked about the patent in litigation, any further than speaking about the operativeness of the machine. I might say at that same interview, counsel requested me to make a search and hunt up anything I could find that would have any reference to the case in litigation, in the shape of dates, drawings, or anything that would give any light, or would be of any value in the case. I promised him to do so, and I think the last remarks he made to me, as I was going out of the door, were that we don't expect you to do this thing for nothing. I said that was all right. So I went to work and hunted up, and searched as counsel had requested me; and if I remember right, I found nothing, save the sketch which has been referred to heretofore, marked "Complainant's Exhibit, Liddell Original Sketch", which I mailed or sent to counsel, at about the time stated.

X-Q. 394. At the time of some of these last interviews with Mr. Herman Elsas, you had in your possession the printed copy of Liddell patent in suit, No. 558,969, sent you by Mr. Coburn, as you have testified? Did you not?

A. I did have a copy of that patent.

X-Q. 395. Can you recollect the substance of any conversation between you and Mr. Elsas, in regard to the operativeness of that patent, No. 558,969; or what was said on that subject?

A. I can recollect of nothing that was said by me to him, in reference to the patent referred to, and neither do I believe that I did; as I have always tried to be honorable, and say nothing that would be detrimental or would injure the parties that I would be doing business for, while I was engaged with them. And to the best of my knowledge and belief, I made no remarks particularly in refer-

ence to the patent in litigation, at any time previous to January 1, 1903; as nearly all interviews I ever had with Mr. Elsas, by request of Mr. Coburn; (although I had many interviews, with Mr. Elsas, years previous to that;) I would say that the interviews I refer to with Mr. Elsas, for the last three years, were principally to find out something about his machines; also a number of my interviews with Mr. Elsas, were for the purpose of selling twelve satchel-bottom machines that the Eastern Company wanted to dispose of. Also a number of the interviews, were for the purpose of trying to get the Continental Company to buy the machine and patent pertaining to the same, that I had built in Philadelphia, which is known as the Purvis machine. I would say that if I haven't answered the question fully, I would be pleased to do so, if counsel will remind me of what I have omitted.

X-Q. 395½. At that interview of September 8, 1902, at my office, was not Mr. George R Ward, now in the room, present at the interview. In fact did you not come to my office with Mr. Ward?

A. At the interview referred to, Mr. Ward was present; but I think that I came there alone, and not with Mr. Ward; although it is possible that may have been so.

X-Q. 396. At that interview of September 8, 1902, between yourself, Mr. Ward and myself, was not Mr. George R. Ward present during the whole interview?

A. Yes, I believe he was.

X-Q. 397. At that interview of September 8, 1902, was not the Liddell patent in suit, No. 558,969, made the subject-matter of discussion and talked about?

A. As near as I can remember, there was nothing else talked of or discussed, at that particular interview.

X-Q. 398. Was not the question as to how far back of the date of application, for that patent, viz.: back of Feb. 6, 1896, you could carry the invention of that patent, made a prominent subject of the discussion?

A. I believe that was part of the discussion and conversation we had at that time; and I told counsel at that time, without refreshing my memory or making a search, to find something, that would give me about the earliest date, or time when I first conceived the idea, or put it into shape of sketches and drawings, that it would necessitate me to hunt and search, to try and find any correspondence and dates, or anything in the shape of drawings and sketches; and counsel asked me, how long I thought it would take to do so, and I told him I had only the evenings to spare to do so, and it might take me some time. He said, "Well, do you mean a year?" I said No, I thought I could do it in less time than that. So, as I have previously stated, I searched for all I could find, in reference to counsel's request; and what I did find, I sent to counsel, as heretofore stated.

X-Q. 399. Prior to this interview of September 8, 1902, had you not been shown by Mr. George R. Ward, a model of machine illustrating the Liddell patent in suit? I refer to the model which you mentioned on your direct testimony?

The witness retires.

Defendant's counsel objects to this question; because it relates to the long volunteered statement which the witness made without any request from anybody, after he had answered Q. 127.

A. In answer to that; at request of Mr. Coburn, I called upon Mr. Ward, for the purpose of seeing if he was getting along with the models. This, as I remember it, was before September 8, 1902, and at that time, I was very busy, and I intended when I called there, to spend a full hour; but Mr. Ward was out at lunch, as I believe, and the greater part of that hour, that I intended to spend, with Mr. Ward, in looking at the models, was taken up that way. The balance of the time (of that hour), which I think was fifteen or twenty minutes, I devoted the most

of the time, to the Continental model; for it was a new construction to me, and I was anxious to understand the construction, and the practicability of the said construction. The balance of the time I spent at looking at my own model, also patent, in reference to the same, No. 558,-969; and to the best of my knowledge and belief, Liddell model was turned round two or three times; but on each revolution of the cylinder, it was stopped for the purpose of examining and explaining the parts that I thought were not practicable, or what was never intended by me or shown by me, in my sketches and drawings which I delivered to Mr. Hunter, at the time before stated, for that purpose. I explained to Mr. Ward, my experience in a paper bag machine of this construction, absolutely necessitated the use of a movable gripper, at both ends of the tube, while the bottom was being drawn into form. And he referred me to the patent as granted, and said that he was instructed by counsel to make the model in strict conformity to the patent, as issued. I told him that was right, but that it would not work in that manner, perfectly. He repeatedly told me that he thought so too; but he would have to do according to instructions. And I at that time, paid no attention whatsoever, whether the forming-plate was of an oscillating character, or a continuous revolving character; as I have before stated, that it was only turned round two or three times, to the best of my rec ollection; and stopped on its revolution, to investigate and explain the same; so I have no good reason to have paid particular attention to that part of the mechanism, as my attention was entirely on the gripper part, as I have heretofore explained. Also, discussing the patent as granted, with Mr. Ward, and stating to Mr. Ward at that time, that I did not believe that I had embodied in my original sketches and drawings, a stationary finger, in place of a movable gripper, as it was entirely contrary to my past experience, in building and constructing paper bag machines.

X-Q. 400. On this occasion, when you saw the model of the Liddell patent in suit, and it was shown you by Mr. Ward, did you make any criticism as to its construction, and operation; other than you have stated in the last answer with reference to the gripper part?

The witness retires.

Defendant's counsel objects to this question; because it refers to the alleged "Model of the Liddell patent, in suit" which was testified about by the complainant's witness, Dayton, in answer to X-Qs. 9 to 17 inclusive (now printed on pages 80 to 82 of the complainant's record) and which model complainant's counsel then refused to show to defendant's counsel, and which model has ever since been withheld from examination or inspection by defendant's counsel. Mr. Walker submits to the court that there should be no cross-examination of Mr. Liddell, conducted on the theory that that model was actually in conformity to the Liddell patent, in suit; until that model has been shown to defendant's counsel so as to enable him to judge of the significance, if any, of whatever statements about that model, may be made by the witness, in response to his cross-examination. It appears to be the theory of this question, that at some time prior to Sept. 8, 1902, the witness saw a model which was constructed according to the patent in suit, and it appears to be the hope of the cross-examiner that the witness will say, that he did not, on that occasion, state that that model differed from the actual invention of the witness, in the way in which Defendant's Exhibit, Model of Liddell patent, No. 558,969, differs from Defendant's Exhibit, Model of Liddell Drawing, No. 1. But it is apparent that that theory and that hope, in order to be legitimate, must be founded upon proof that the model which the witness saw, *was* constructed, when he saw it, in accordance with the patent in suit; whereas, complainant's counsel, instead of furnishing any such proof, has always persistently withheld

that model from inspection by defendant's counsel, in spite of repeated requests to exhibit it; and has thus seemed to confess that the model in question, cannot endure criticism, in respect of its genuineness.

Complainant's counsel protests against these long drawn-out statements on the record, unnecessary for statement of legitimate objection, and causing great waste of time; and he makes this protest also, with a view to objecting if ever in the future, questions of costs or of making up records, arise, to be compelled to pay anything arising from such statements; and complainant's counsel reserves the right, without repeating statement, after each long statement on the record by defendant's counsel, to move at some proper time, to strike out such statements, as no proper part of the record, and to put the cost of making a record of the same, upon the defendant, in any event.

A. To the nearest of my recollection, Mr. Ward remarked to me that he had to change the gearing, from one side of the machine, to the other, and was requested by counsel, so to do, so as to represent, and be in strict conformity to the patent as issued. I don't remember at this time, talking about any other particulars, in reference to Liddell Model; but would like to state, in conjunction with this interview, that some time previous to the interview, I was requested by Mr. Coburn, to call at the Fifth Avenue Hotel to see him there, and at that interview he asked me if I would build a machine, that is, a full-sized machine, in practicable shape, to illustrate the machine in litigation. I told him I would. He asked me how much I would charge. I told him about five hundred dollars. It was to be understood between him and I, that it was to represent the patent, as granted, strictly. I might state that I heard no more from Mr. Coburn, in reference to that, till he requested me to call upon Mr. Ward, to see how he

was getting along with the model representing patent in suit, also Continental model.

X-Q. 401. Did you not understand that your visit to Mr. Ward and to see these models, made at the request of Mr. Coburn, was to suggest any changes in the models, that occurred to you after examining said models, and their operation?

A. Yes. That was part of the instructions I got, as far as I remember. And I did so, as far as the time would permit, while I was there, in reference to the necessity of a movable gripper, holding both ends of the tube, while being drawn in form; and I didn't think of anything else at that particular time, that was absolutely necessary, for a model to be made to represent the patent, as granted.

X-Q. 402. You certainly did not suggest to Mr. Ward, at that interview, when you saw the Liddell model, as stated, that the former-plate ought to be altered, in respect to the motion of that plate? Did you?

A. To the very best of my recollection, and I am very positive, that I made no remarks in reference to that plate, being altered, or in any shape changed, from what Mr. Ward had made it; for the simple reason that I was informed previously, that the model was to be made in strict conformity to the patent, as granted.

X-Q. 403. With the exception of what you have said about the gripper part, you made no comment on this Liddell model, shown to you by Mr. Ward, on that occasion, in respect to not conforming to the invention you put in Mr. Hunter's hands, to apply for this patent, No. 558,969, did you?

A. I have no recollection of making any comments, other than stated, at that time.

X-Q. 404. Since about the time this suit was begun, October, 1901, have you not been in constant communication with Mr. Coburn, down to December 31, 1902, in regard to this patent in suit, and matters connected with this

litigation ; both in the way of receiving letters from him, writing him letters and in personal interviews? I refer to Mr. Charles F. Coburn, president of the complainant company.

A. From the time stated, up till the early part of January, 1903, I have been in communication with Mr. Coburn, more or less, and have had a number of interviews with Mr. Coburn, and he has talked over the patent in suit, in a general way, to me; but never asked me whether or not, the patent was in strict conformity, as granted, to the original sketches and drawings that I delivered to Mr. Hunter, at the time before stated, for said purpose.

X-Q. 405. Did you, during the period referred to, in any way, state or suggest to Mr. Coburn, that this Liddell patent, No. 558,969, did not show and describe or was not taken out for, what was really your invention?

A. No, I have no recollection, or reason to think, that I made any remarks or suggestions to Mr. Coburn in reference to whether this invention as granted, strictly complied with my original plans and drawings as given to Mr. Hunter, for the purpose of getting an application for the same; simply because I wasn't asked any question in relation to any difference, and had no reason or occasion to refresh my memory back to the time of giving these drawings and sketches to Mr. Hunter for said purpose; as we talked of nothing other than what the patent showed, on its face; in relation to that.

X-Q. 406. Now during this same period, from October, 1901, to the end of December, 1902, have you not had a number of interviews with Mr. George R. Ward, here present, and who showed you that Liddell model in connection with the patent in suit, and this case; and have you not corresponded with him, during that period?

A. Yes, I think I met Mr. Ward either once or twice at the Fifth Avenue Hotel, when I was requested by Mr. Coburn, to meet him there. But I have no recollection at

either of those interviews, of making any remarks about the construction of the patent; and I either before, or shortly after that time, was requested to call upon Mr. Ward, and I did so, as I have formerly explained, and I think, and believe, that Mr. Ward called at my house, either once or twice, and I think a third time, when I wasn't in; and I think I received either one or two letters from Mr. Ward, and I think I answered these letters; but have no recollection of anything in either his letters or mine, referring to the construction of the patent; nor at his personal interviews with me in Brooklyn, have I any recollection of speaking about the construction of the model; further than making it conform to the patent, as issued; because I believe, that Mr. Ward, at that time, had no knowledge or means of knowing, what my original sketches and drawings were, so that the conversation on the particular point in litigation, was never brought up, or talked about between us, in any of our interviews or letters.

X-Q. 407. At any rate, you never did inform Mr. Ward, did you, that the Liddell patent in suit, was not taken out in accordance with your invention, as originally submitted to Mr. Hunter?

A. I have no recollection of making any remarks that the patent in suit, was not taken out in strict accordance with my original invention or drawings, other than what I have formerly stated; and that is in reference to the necessity of a gripper holding both ends of the tube, while the bottom was being formed.

X-Q. 408. Referring to the time you saw this Liddell model, with Mr. Ward, was not the fixed finger you mention seeing thereon, affixed to the former plate?

A. It certainly was. It was not movable in any shape or form.

X-Q. 409. Then when you criticised this finger on the former-plate, of this Liddell model, your attention was and

must have been drawn to the former-plate, on which it was located. Is that not so?

A. Yes, my attention was drawn to the finger as shown on the model; but in my estimation, it wouldn't be practicable, for the purpose required.

X-Q. 410. And this former plate of the Liddell model, was operated in front of you, by Mr. Ward, was it not?

A. Yes, I believe Mr. Ward turned it around once, o perhaps twice, and in each revolution, it was stopped at different parts of the revolution, for to examine how the bag was drawn in shape, and I think I turned it around once myself, for the same purpose, while stopping it on its revolution at different parts of the revolution, to examine how the stationary finger would act. And probably I think now, if I had turned it around a number of revolutions, continuously, I might have discovered then, as I have now, that it was not granted (that is, the patent, that is in litigation) in conformity to my original sketches and drawings, that were taken to Mr. Hunter, for that purpose.

X-Q. 411. Do you mean to say, you cannot now remember, whether that Liddell model shown you by Mr. Ward, had on it an oscillating former-plate, with the fixed hook on it, or whether it had on it a revolving former-plate with the fixed hook on it?

A. If I were asked now to swear on a stack of bibles, I couldn't positively state, whether that forming-plate was of a revolving character, or an oscillating character; as I spent so little time there looking at it, and my attention wasn't drawn particularly to that part of the construction; thinking all that was necessary, was simply to have the model in strict conformity to the invention as shown. I might state that previous to seeing this model, I made a sketch or some sketches, I think three different views, and as I understand, Mr. Coburn after I had delivered the same to him, gave them to Mr. Ward, to help him in building the model; and whether these sketches showed a re-

volving or an oscillating construction, I could not swear to now, as the sketches and drawings, that I gave to Mr. Coburn at this particular time, were not completed, and as he had sent for me to bring the sketches and drawings to the Fifth Avenue Hotel, to show him how far I got along with them. And I requested him to let me have them for a few days, to complete them. He said he was going to Philadelphia, that day, and would take the sketches with him ; and if I remember right, he told me he would return the same to me, for the purpose of completing them. But I have never seen them since.

X-Q. 412. Suppose these sketches and drawings you have just referred to, and which you say you handed to Mr. Coburn, did not show a revolving former-plate in connection with the mechanism illustrated in said sketches. Would that influence you in any way, as to whether or not, your invention consisted of a reciprocating former-plate or a revolving former-plate or both ?

The witness retires.

This question is objected to ; on the following grounds.

The sketches and drawings referred to, being traced to the possession of the president of the complainant corporation, ought to be presented to the witness, before he is questioned, touching their significance ; and he ought not to be asked to draw inferences from hypothetical statements of the character of those sketches and drawings.

The question is immaterial ; because the sketches and drawings referred to, were made to help Mr. Ward build a model in accordance with the patent in suit ; and not with any reference to the real invention of the witness, back of the patent in suit.

Mr. Walker submits to the court, that if the complainant's counsel believes that the witness has some time said that the patent in suit, conforms to his invention, back of the patent in suit ; it would be proper to call the attention of the witness to the time and place where such a statement

is believed to have been made, and to ask the witness whether he made such a statement, at that time and place. But Mr. Walker also submits to the court, that it is not proper cross-examination, to ask the witness for instances wherein he was silent, in respect of the fact that the patent in suit is out of conformity with the invention of the witness back of the patent in suit ; without proving that on those silent occasions, the witness would have told the facts upon the subject, if those facts had been such as in this deposition, he has elaborately testified they were.

A. That would not influence me in any way that I can see of now, as I fully believed and understood from all the instructions and conversations that I had with Mr. Coburn, or Mr. Ward, in reference to the same, at different times, as I have before stated, was that the model or the machine, I have heretofore stated, for the same purpose, should be made in strict conformity to the patent, as granted.

X-Q. 413. How were you able to make these sketches referred to, which you handed Mr. Coburn, and to help in the making of a model or machine in strict conformity to the patent in suit, unless you had the patent in suit before you?

A. In reply to that question ; I would say that previous to making these sketches and drawings referred to, I had received a copy of the said patent, from Mr. Coburn, and also had one from Mr. Ward, later on ; but previous to that, I would say, some years previous to that, I had copies of said patent, that I sent to Washington for, and from that time, till this litigation was started, I never had occasion, to examine them or look them over, or read them, until I was called upon by counsel, Walker, to do so. I might say it is my custom to try and get a copy of each of my patents, should future occasion require me to make use of them ; but never investigate or read them over, till I find it necessary to do so.

X-Q. 414. Well, when you were asked to make these sketches and drawings to help Mr. Ward in getting up the Liddell patent model, which you understood was to conform strictly to that patent, and having in your possession a copy of the patent, received from Mr. Coburn, as well as possibly one obtained by yourself previously; did you not refer to the patent in suit, and examine it, in connection with getting up such sketches?

A. In making these sketches and drawings, I made them in strict conformity to the patent drawings, as shown, in the case in litigation, as I possibly could; with the exception that I had to make the proportions entirely different from what the patent showed, to be able to build a practicable machine, to represent said patent, as issued.

Adjourned until Friday, March 27, 1903, 11 o'clock A. M.

Friday, March 27, 1903, at 11 o'clock A. M. Adjourned until Monday, March 30, 1903, at 11 o'clock A M.

Monday, March 30, 1903, 11 o'clock A. M. Met pursuant to adjournment; counsel present as before.

X-Q. 415. Still referring to this Liddell model which was operated before you by Mr. Ward, as already stated in your testimony; was the cylinder shown in that model, as you saw it, a revolving cylinder?

A. To the nearest of my recollection and belief, it was a revolving cylinder and I had no reason to think otherwise; because I understood it was constructed as represented in the patent as issued.

X-Q. 416. Well, don't you remember when you saw this Liddell model operated in front of you, by Mr. Ward, that the cylinder was a revolving cylinder, making complete revolutions?

A. Yes I remember that it was a revolving cylinder; as I turned it around myself, once or twice, without having occasion to turn it backwards.

X-Q. 417. Then this Liddell model cylinder was a revolving cylinder, as distinguished from a merely oscillating cylinder?

A. Yes, it was a revolving cylinder; and not an oscillating cylinder.

X-Q. 418. Is it not the fact that the sketches you spoke in your last day's testimony of making, and handing to Mr. Coburn, in order to help Mr. Ward in getting up this Liddell model, were given by you to Mr. Coburn before you made this visit to Mr. Ward, and saw the Liddell model operated, as you have stated?

A. Yes, I gave these sketches and drawings to Mr. Coburn before I made this visit to Mr. Ward; some time before.

X-Q. 419. When did you first meet Mr. George R. Ward, now here present, and so far as you recollect?

A. The first time I remember seeing Mr. Ward, to my knowledge, was about; I guess, three or four years ago.

X-Q. 420. During the period from the beginning of this suit, October, 1901, down to January, 1903, were you in correspondence with Mr. George R. Ward, from time to time, about this suit, and matters connected therewith, and did you meet him, a number of times, and talk over the matters in connection with this case?

A. As I have stated before in my testimony, to the nearest of my recollection, I had either two or three letters from Mr. Ward, and I answered them, if I remember right; and I remember nothing in those letters that particularly refers to the suit; and in reference to interviews with Mr. Ward, I have already stated that, as near as I can recollect.

X-Q. 421. How many interviews do you remember having with Mr. Ward, during the period referred to?

A. I have no recollection of any interviews that I had with Mr. Ward during that time, other than what I have stated; that is the one I had when I saw the model, and one at my house; and he called once, I believe, and I wasn't in.

X-Q. 422. Do not you remember that Mr. Ward was present at the interview at Fifth Avenue Hotel, when you met Mr. Coburn there, and gave Mr. Coburn the sketches you have referred to, to help Mr. Ward build the Liddell model?

A. When I gave the sketches to Mr. Coburn, at the Fifth Avenue Hotel, at the time referred to, I d.' not see Mr. Ward there when I was showing and explaining the sketches to Mr. Coburn; but I believe he was there at that time, and I think we talked together before we left the place.

X-Q. 423. Well, the time you saw the model, and one time at your house, and the time you gave the sketches to Mr. Coburn at the Fifth Avenue Hotel, and the time you called at my office, 120 Broadway, New York, and Mr. Ward was present; that makes at least four occasions when you have had interviews with Mr. Ward, or when he was present at intervie during which this case, and the Liddell patent in suit, ere discussed, to some extent; is that not true?

A. Yes, that makes four times that I saw Mr. Ward, when this suit was referred to more or less. The interview I had at the Fifth Avenue Hotel with Mr. Coburn, I didn't meet there for the purpose of having an interview with Mr. Ward, but I called there at Mr. Coburn's request, and I had no expectation of seeing Mr Ward.

X-Q. 424. At any of these interviews with Mr. Ward, or at which he was present, as mentioned, or any other interview, or in any letter you wrote to him, did you ever suggest in any way, that you furnished to Mr Hunter, the patent attorney, a sketch like Defendant's Exhibit, Lid-

dell Drawing, No. 1, or that the former-plate of your patent in suit, No. 558,969, should be shown and described as revolving rather than oscillating?

A. I did not; for the simple reason that I hadn't thought of the constructions that I showed in my original sketches at that time, neither had I any occasion to think what they were; as I have stated before, that the model was to be made in strict conformity to the patent as issued. And I was never asked by anyone to examine the patent as issued, and try and remember if it was granted exactly according to the original sketches and drawings which I took to Mr. Hunter, at the time before stated, for that purpose.

X-Q. 425. Who was it that first did ask you "to examine the patent as issued, and try and remember if it was granted exactly according to the original sketches and drawings, which I (you) took to Mr. Hunter at the time before stated, for that purpose"?

A. I believe at one of the interviews that I had with Mr. Walker, in the early part of this year, 1903, after I had seen the model that he showed me, representing the patent as issued; I stated at that time, after looking at the model for a few minutes, that I thought there was something wrong; and he asked me if I could explain what. I told him, yes, that to the best of my recollection at that time, I designed and showed in sketches (that is the drawings for patent in suit) for the forming-plate to be of a revolving construction. Then he called my attention to the patent as issued. That is the first time I remember of having my attention called to the patent as issued, for any particular reason.

X-Q. 426. Referring to the interview you had with me at my office on September 8, 1902, in regard to this case, and also referring to any letters you wrote to me, or to my firm, in connection with this case; did you at any time, or

in any way, suggest that the Liddell patent in suit, did not correctly show or describe your invention?

A. I did not.

X-Q. 427. Did you at said interview, or in any such letters, suggest to me or to my firm, in any way, that your original invention in connection with this patent, was of a revolving former-plate; or that you had made or submitted to Mr. Hunter, a sketch showing a revolving former-plate, and in any way like Liddell Drawing, No. 1?

A. I did not; as I had never been asked any questions, in reference to the same, and had no reason to refresh my memory upon what the original sketches were. That is as far as the construction is concerned.

X-Q. 428. Did you not call at my office on September 8, 1902, in accordance with a special request made to you by Mr. Coburn, to go to my office, and talk over with me, and give me information about the earliest date to which you could carry back the inventions embodied in this Liddell patent in suit, No. 558,969?

A. Yes, I recollect about that time, I received a letter from Mr. Coburn, to call at counsel's office, for the purpose of giving any information and assistance that I could, at that time give in reference to patent in suit, and in any way assisting counsel on the same. I did so, and as I think I before stated, counsel explained to me, pretty fully the case as far as it had gone, and asked me to hunt up or try to find anything in the shape of letters or dates, sketches, or anything that would be of any value, in assisting the case, referred to. I did so, fully, as I have explained heretofore. He also asked me, what I thought of it. I said I thought that, or rather I couldn't see, how Mr. Claussen could ante-date the Liddell patent, as the Liddell patent was granted two years before the Claussen patent was granted, and I also wrote to Mr. Coburn, in answer to his letters, the same answer.

X-Q. 429. You evidently had some misunderstanding

about the Claussen patent, which was referred to. As appears from letter which I now hand you, and ask by whom it was written, and when. It is addressed to Mr. Charles F. Coburn, and the red pencil marks thereon, were made by me personally, after I received it from Mr. Coburn?

A. This letter was written by my youngest daughter, Margaret, at my dictation, November 16, 1902.

Complainant's counsel asks the Examiner to mark for identification the letter just referred to, and it is marked "For identification on part of complainant, Liddell letter of November 16, 1902".

X-Q. 430. I note that this letter of November 16, 1902, by you to Mr. Coburn, says as follows:

"I remember however, that it was in the beginning of the year 1895, that I started making said drawings".

Does that refer to drawings you left with Mr. Hunter, in Philadelphia, at the time you had the first interview with him, and his draftsman, in connection with starting the application for patent in suit?

The witness retires.

This question is objected to as calling for secondary evidence; the letter itself, being the best evidence of its own meaning.

A. Yes, this letter has reference to the drawings that I made in 1895, in reference to application for patent in suit.

X-Q. 431. Please look at the several letters now shown you, bearing dates as follows: Feb. 12; May 19; June 3; June 27; June 29; July 4; Aug. 22; Aug. 28; and Nov. 6; all addressed to Mr. Coburn, and all signed in your name; and state by whom these letters were written, in what year, they were written, and sent? (that not appearing on the face of the letters as written). I also show you three other letters dated March 25, June 10, and June 24, respectively, addressed to Mr. Hunter, and signed in your name; and will you please answer the same question about these also?

A. I think they were all written in 1902. And they were all written by myself, except the three letters to Mr. Coburn, bearing date June 3, 1902, Aug. 22, 1902, and Nov. 16, 1902, which were written by my children, under my dictation.

Complainant's counsel requests the Examiner to mark the twelve letters referred to, in the above question and answer: "For identification on part of complainant, Liddell letters", as by their respective dates, and they are so marked.

X-Q. 432. I note that in the letter dated Feb. 12, you say: "It might be well to have them, if I have to go on the stand also", referring to the sketches and drawings. What did you mean by that sentence?

A. I meant by that sentence, that Mr. Coburn may have made some reference in his letter to me, in regard to a suit being had on the patent, No. 558,969; and I referred to the necessity, or a means of helping me in my evidence, if I was called upon in the case, by the Eastern Paper Bag Company. That is, as near as I can remember, my reason for answering his letter in this manner.

X-Q. 433. Now, as a matter of fact, it was stated to you by Mr. Coburn, either in correspondence, or personally, and it was also stated to you by me, at the interview you had with me on September 8, 1902, that you might be called upon by the complainant, in this case, the Eastern Paper Bag Company, to go on the witness stand, as a witness, with reference to the earliest date of the invention of what was covered by the patent in suit?

A. I would answer that question, by saying that I positively have no recollection at any time, of Mr. Coburn making such remarks, or any remark, that I might be called on the stand as a witness in this suit, now in litigation; and in regard to counsel, any remarks he made at the time I visited him, I have no recollection of him making any such remarks, that I would be called as a witness

in this case; and I would further state that the last letter I received from counsel, stated that he didn't think that I would be required in the case at all, or words to the same effect. I think I have that letter still.

X-Q. 434. If you did not have in mind, even as early as Feb. 12, 1902, long before your interview with me, the possibility of being called as a witness, by complainant, in this case; how can you explain the expression of your letter of Feb. 12, "It might be well to have them (the drawings) if I have to go on the stand also"?

A. The way I would explain the expression of my letter of Feb. 12, is, as an intelligent man, I supposed it might be possible that I might be called into this case.

X-Q. 435. Referring now to your letter of Aug. 22, 1902, I find therein the following sentence: "I do not believe Claussen can prove prior claim to me, in fact, I feel confident that I can prove prior claim, as I was at it some time before I assigned to you." Does not that sentence refer to the patent in suit, and to what you could prove as to priority between yourself and Claussen?

The witness retires.

This question is objected to, because the letter of August 22, 1902, plainly shows that the sentence quoted therefrom, does not refer to any particular patent, but refers to a bag machine, of which the witness had conceived the idea at some prior time; and because, therefore, the question calls for secondary evidence of a written document, and can have no object, except to mislead the witness, into ascribing to that document a different meaning from that which it plainly expresses.

A. That sentence in the letter stated, refers directly to the patent in suit; and I would state that all the interviews and correspondence that I had with Mr. Coburn, in reference to this case, in any shape or manner, distinctly led me to understand that it was simply a case of priority, and had nothing to do with the construction of the

machine, whatever, at this particular time, when I sent this letter, as far as I can remember.

I might say that I did write to Mr. Coburn, stating that I had been to work making sketches and drawings for application for patent in suit, some time previous to taking the drawings to Philadelphia, for the purpose aforesaid, and thought at that time, under these circumstances, that I could clearly prove priority in regard to the Claussen & Liddell patents in this suit.

X-Q. 436. I find in that letter of Aug. 22, the following sentence: "I have not spoken to anyone about when I conceived the idea of said bag machine, or when I first got it up." Does not that sentence refer to the bag machine of the patent in suit, in regard to which you felt confident you could prove prior claim, as against Claussen?

The witness retires.

This question is objected to; because the letter plainly refers to the idea of a bag machine which the witness had conceived, and does not identify that idea with the patent in suit. Attention is called to the fact that the witness has testified, over and over again, to the effect that until January, 1903, he took it for granted, without particular examination, that the patent in suit was in conformity to an idea which he had conceived and conveyed to Mr. Hunter, back of the patent in suit; but that in January, 1903, he discovered some differences between that idea and that patent, the extent of which differences, he has fully explained, on direct examination, and also on cross-examination. Under these circumstances, X-Q. 436 is objected to, as calling for secondary evidence, and as calculated to mislead the witness, into inadvertent error, by leading him to agree without careful analysis, with the form of statement in the question.

A. It does.

X-Q. 437. Please look at the letter of August 28, 1902, in which you say: "I saw Mr. Ward yesterday, and he

explained to me how your case was getting along. I will give Mr. Ward all the information I can in regard to the matter. I hope you will have good luck in your case." What case does that refer to?

A. It refers to the present case now in litigation; as I had no knowledge of the Eastern Paper Bag Company having any other case on hand, that I could be interested in.

X-Q. 438. That letter of August 28, refers to an interview with Mr. Ward, on August 27, 1902. Where was that interview held?

A. Why, the interview was had, to the nearest of my recollection, (if counsel refers to the time that I went to see the model, or the models, which Mr. Ward was making,) was at Garvin's machine-shop, in New York.

X-Q. 439. Was it on August 27, 1902, to the best of your present recollection, that you had the interview with Mr. Ward at Garvin's machine-shop in New York City, when you saw the Liddell model operated by him in your presence, in accordance with your previous testimony?

A. I couldn't positively state, whether it was or not, on the date mentioned by counsel.

X-Q. 440. Well, your letter of August 28, 1902, says: "I saw Mr. Ward yesterday"; and yesterday with reference to August 28, 1902, was August 27, 1902. Now, where was it that you saw Mr. Ward on August 27, 1902?

A. Well, according to this letter, and date, I believe it must have been the day previous to writing this letter; and as this letter states that I saw Mr. Ward yesterday, and saw the models, and gave him all the information that I could, it must have been as I have heretofore stated, at the Garvin machine-shop in New York.

X-Q. 441. Then according to that, the explanations Mr. Ward made to you, on the day before August 28, 1902, were in connection with the Liddell model at Garvin's machine-shop in New York City?

A. Any explanations or talks that Mr. Ward and I had,

were in reference to the models, that were then at Garvin's machine-shop, which I understood were about finished.

X-Q 442. That included the Claussen machine model, as well as the Liddell machine model?

A. That included the Claussen machine as well as the Liddell machine; also the drawings of patent granted to Liddell, of the case in suit.

X-Q. 443. In your letter of July 4, 1902, I find the following: "the model I left with Hunter was a small wood model, of the other patent, I assigned to you, and would be of no use to you in this case, but he ought to have it on hand somewhere." Was the other patent referred to in that sentence, whose model would be of no use to Coburn in this case, the other patent, No. 564,288?

A. I think I very fully explained that in my previous testimony; and would state now, that the model referred to, was in reference to patent, No. 564,288.

X-Q. 444. What is your best present recollection of the date when you executed the assignment or assignments, of the inventions or applications for Liddell patent, No. 558,969, and of Liddell patent, No. 564,288 to the Eastern Paper Bag Company of Connecticut, to whom said letters patent were issued?

The witness retires.

This question is objected to, as not proper on cross-examination; because it has no relevancy to the direct examination. It is also objected to, as calling for secondary evidence, of the date of the assignments in question, which assignments are presumably in possession of the complainant. If the purpose of the question is simply to test the power of recollection of the witness, then it is objected to, because it relates to a collateral date, which is inherently immaterial to the suit.

A. As I have before testified, several times, to the best of my recollection, when I made the assignments, it was some time in the early part of January, 1896.

X-Q. 445. Your recollection then is that you executed the assignments of these two applications, the same day that you executed the application papers?

A. To the nearest of my recollection, that is so.

X-Q. 446. You have testified on the direct examination, substantially, that you worked, for the Eastern Paper Bag Company, at Philadelphia, from the early part of 1893, and through that year and through 1894, and under a contract which continued till November, 1895. Please state exactly what you were paid during that period under said contract?

A. For the year 1893, (the contract started in January, I think,) till the following year, the same date, I was paid ten dollars ($10) a day for all the time I worked during that year, for the Eastern Paper Bag Company, which I think, was nearly all the time. And in 1894, I was paid at the rate of ten dollars ($10) a day; but some of the time during that year, I was not at Philadelphia, at work on said machine. In November, of 1894, till November, 1895, I was under a written contract for a salary of twenty-five hundred ($2500) a year, and I have the contract yet.

X-Q. 447. Please figure up the total amount paid you by the Eastern Paper Bag Company, during the period from January, 1893, to November, 1895, as near as you can, in view of your above answer, and state what the total is?

A. I would say that as near as I can recollect, in 1893, I was probably paid in full for all the working days at the rate of ten dollars ($10) per day, which would amount to about three thousand ($3,000) dollars. For the first eight months in 1894, something in the neighborhood of $2,000 dollars. For the last year it was $2,500. That would make $7,500, for the three years, on the above basis.

X-Q. 447½. Now so far as assigning to the Eastern Paper Bag Company, any inventions for paper bag machines, or applications therefor, during said period, and under

your contract with them, as stated; the only inventions you made and assigned to said Eastern Paper Bag Company, were the two applications resulting in letters patent, No. 558,969 in suit, and resulting in letters patent, No. 564,288, and also the application resulting in letters patent to you No. 535,591. Is that correct?

A. These are the only applications that I assigned to the Eastern Paper Bag Company, as far as I can recollect, in pursuance of that contract.

Adjourned until Tuesday, March 31, 1903, at 11 o'clock A. M.

Tuesday, March 31, 1903, 11 o'clock A. M. Met pursuant to adjournment; counsel present as before.

X-Q. 448. I find in your letter of Nov. 6, 1902, already marked for identification, the following sentence: "The sketches or drawings I gave Mr. Hunter, was complete enough for him to make the Patent Office drawings from, and he ought to have kept them or returned them." Does that refer to the sketches or drawings you gave Mr. Hunter, at what we have called the first interview with him at his office in the Fall of 1895, and in regard to the two applications?

A. That refers to all the drawings and sketches, that I gave to him at that particular time, in a general way for the purpose of getting applications for patents.

X-Q. 449. I find in that same letter of Nov. 6, the following statement: "I will do all in my power to help you in the matter, as I understand that the whole case depends upon who can prove priority, and that ought to be very easily done." What was the matter in which you said you would do all in your power to help Mr. Coburn; and who did you refer to in regard to proving priority; and what was the case which depended on it?

A. In answer to that; I would say that by stating I

would do all in my power to help Mr. Coburn or the Eastern Paper Bag Company, that I would correspond with him and give him all the information that would be of any assistance in the case, also to hunt up any papers or dates or anything pertaining to the case, that would be of any benefit in assisting the Company in the case. I referred to Mr. Claussen, the inventor of the Claussen machines. The present case in suit depended on it.

X-Q. 450. Depended on what, as between yourself and Claussen, as you understood?

A. Simply a case of who could prove priority.

X-Q. 451. You say: "And that ought to be very easily done." Who did you mean would be able to prove priority very easily; as between you and Claussen?

A. Well, I think that would be a simple matter, for anyone with common sense, after they got the official record, or copies of the same, from Washington, that would show on the face, of it, who could prove priority, without any counsel at all.

X-Q. 452. Well, what you meant was, that you, Liddell, could prove priority over Claussen, is that so?

A. I think so, as far as the dates of the issue of the patents is concerned.

X-Q. 453. My question asked what you meant by this letter; whether it referred to your being able to prove priority over Claussen?

A. Well, I simply stated before, that I thought if there was ever any case came up in reference to the same, that the dates of issue would show for itself, who had priority, and not of any evidence or facts I could show.

Answer objected to as irresponsive.

X-Q. 454. Please direct your attention to my question, which asks you whether in that letter of Nov. 6, when you say "who can prove priority" it does not mean as between you, Liddell, and Claussen?

A. It does. I meant between Claussen and myself, and

also to assist the Company to have priority to title of the same.

X-Q. 455. You have spoken in answer to X-Q. 433, of a letter you received from counsel, (meaning, I understand, complainant's counsel,) in which you say that it was stated, that counsel did not think you would be required in this case at all. I have carefully examined my firm letter-book for a copy of any such letter to you, and do not find any such letter. Will you bring over with you, the letter you refer to?

A. I will make a search for the letter if I can find it, and if so, I will bring it here; but if I cannot find it, I will still state that I am positive that I received a letter with the same words, as I have before remarked, or their equivalent; as I remember distinctly receiving that letter in the morning, before I went to business, and read it aloud, so my wife heard it, and she made the remark, she thought it strange that I, being the inventor, would not be called in the case, if there was any case.

X-Q. 456. I find in my firm letter-book, covering the period from October 1, 1902, to December 4, 1902, only three letters addressed to you, one on page 844, one on page 863, and one on page 898. Please look at those three letters, and state if either one of them is the one you refer to?

A. No, neither one of those letters embraces the clause that I refer to, and which I received from counsel, stating that he didn't think it would be necessary for me to be called in the case at all, or words to that effect.

X-Q. 457. The letter of Nov. 28, 1902, found in press-copy on page 863, of my firm letter-book, Vol. 75, is as follows:

November 28, 1902.

WILLIAM LIDDELL, Esq.,
401 10th Street,
Brooklyn, N. Y.

Dear Sir.—We find that the sketches which you sent us, show a paper bag machine having a rotary reciprocating cylinder with a flat bed, which is the invention of your Patent, No. 564,288, filed January 21, 1896, issued July 21, 1896. The sketch, therefore, has apparently more direct bearing on that patent, than on your patent in suit, which is No. 558,969, filed February 6, 1896, issued April 28, 1896; which shows a continuously rotatable cylinder without any flat bed. While we shall be glad to have all your early original sketches of paper bag machines, we wish to have those which have the most direct bearing upon the latter patent, which is in suit. We trust that in your future investigations, you will be able to find such sketches.

Yours very truly,
SAM. R. BETTS."

Did not that letter specifically call your attention to the fact that the essential difference between your patent in suit, No. 558,969, and your other patent, No. 564,288, lay in the fact that the patent in suit had "a continuously rotatable cylinder"; whereas the other patent had a "rotary reciprocating cylinder"?

The witness retires.

This question is objected to; because it involves a construction of the language of a letter, and because that construction is plainly erroneous, in that it characterizes as "the essential difference" between the two Liddell patents, one particular difference which is specified in the letter, but is not therein said to be "the essential difference" between those patents. The question is therefore objected to, as misleading to the witness; who is shown by

the present deposition, to be inapt at analyzing language, and detecting all the meanings that may be hidden in phraseology.

A. Yes, I understood from this letter that the sketch I sent to counsel at that time, had no bearing upon the case in suit, and would be of no value in the case; but he asked me to search for anything I could find that would be of assistance in the case.

X-Q. 458. Did you not understand from that letter of Nov. 28, that the reason the sketch you had found and sent me (and which is marked as Complainant's Exhibit, Liddell Original Sketch) was not what I wanted was as pointed out in the letter, because it showed "a rotary reciprocating cylinder" like that of patent No. 564,288 and did not show a "continuously rotatable cylinder" like that of patent No. 558,969, in suit?

A. I understand from counsel's letter, that what I sent him, in the shape of a sketch, as he stated, had no relation to the case, and that he wanted me to find some sketch or something pertaining to the case in suit; and at that time, I hadn't refreshed my memory, or considered the radical difference between the two constructions, of said machine referred to which is No. 558,969, patent in suit, and No. 564,288.

X-Q. 459. The question is, did not the language of that letter of Nov. 28, 1902, now before you, point out to you, that the patent in suit had a continuously rotatable cylinder, as different from the patent No. 564,288, which had a rotary reciprocating cylinder; and did you not understand that language?

A. I understood the language perfectly; and I have before remarked, that all I was asked to find was something pertaining to the case in suit; whether it had anything showing a continuously rotary cylinder, or a reciprocating cylinder; and as I understood my duty, and what I was requested to do, it was to find any sketches or any-

thing pertaining to that suit, anything that would be useful in the case, in any shape or form, in the interest of the Eastern Paper Bag Company.

X-Q. 460. If you had found a sketch showing a continuously rotating cylinder, and a reciprocating or oscillating former-plate, would you not have sent that sketch to me in connection with the search you were making?

A. I undoubtedly would have done so, as counsel requested me to do so, had I at that time found anything in the shape of a sketch or drawing, of that character. I would like to state here now, that in all my business transactions, with any person or persons, I have never been accused, to my knowledge, of doing anything dishonorable, in any shape or form; and I might remark now, as far as this case in suit is concerned, I haven't received one penny nor the promise of any consideration for the future, in the shape of money or any equivalent, for the testimony I have given, and may hereafter give; other than I have been promised to be paid for my time and services here by Mr. Walker; and I was brought into this case, entirely unaware. And I might say that I respect all parties I know of in the Eastern Paper Bag Company, as much as I do the parties of the Continental Company; and there is only one I know of, and that is Mr. Elsas, and I have known him for many years before this suit started.

All last answer, after the first sentence objected to as volunteered and not responsive.

X-Q. 461. In view of what you have already said in your testimony, in regard to rotary movements being superior to oscillating or reciprocating movements, in connection with paper bag machines, for reasons you have stated; do you not consider a bag machine which embodies the combination of a continuously rotating cylinder, with an oscillating former-plate, as superior on general principles, to a bag machine which embodies the com-

bination of an oscillating and not completely rotating cylinder, with an oscillating former-plate. One having continuous rotary motion applied to the cylinder while the other has not?

A. Well, in my opinion, that will depend upon circumstances and conditions of things; but I will certainly say, as a general rule, that whenever a movement can be of a continuous rotary motion, it is certainly preferable, to any other movement, as far as durability and speed, and result in any good commercial machine. That is my experience in mechanics.

X-Q. 462. Now referring to paper bag machines of the general character we have been considering in connection with your testimony, is it or not the fact that this patent, No. 564,288, embodies your earliest conception or invention in that particular line, and resulting in a machine where the cylinder had an oscillating or reciprocating motion, and the former-plate had also an oscillating or reciprocating motion?

A. In answer to that; I would say that I couldn't say whether it is the first or not; because I developed three constructions of machines for said purpose at the same time, or during the same year; and do not fully remember the construction of machine that I sketched and drew, and as far as I know, hasn't been patented or applied for. I would also state, that in reconstructing and building a new machine, such as is now known as the Purvis machine, the bottom bed-plate or suction boxes, were of a partially rotary construction. The top was of a reciprocating or oscillating construction. To explain this, I would say the bottom plate or suction boxes were fastened to an arm, to a shaft supporting the same, and rotated on that shaft on its center, to the proper distance required. That is all that I have put into tangible form, and in shape of S. O. S. bags that I remember of at present. I have conceived many different ideas; but never put them into shape of

drawings or sketches or anything to represent the same, as yet.

X-Q. 463. Well, during this period, prior to the day when you took the drawings and sketches to Mr. Hunter at Philadelphia, to start applications, you were considering and planning machinery for making paper bags, and in connection with cylinders, rotating or making complete revolutions, or reciprocating or oscillating, and former-plates to be operated in connection with such cylinders, which plates were either oscillating or reciprocating, or revolving, in complete revolution; is that not so?

A. At the time prior to when I took these sketches and drawings to Mr. Hunter, I can't say that I was really studying any particular constructions for that purpose. I had other business in New York going on at the same time, and didn't think much about it, till I got on the way reconstructing the Purvis machine, and then, as I have before stated, I made the remark to Mr. Haverstick, that I thought I had a different plan for manufacturing those bags (that is, the S. O. S. bags) by a different construction of machine. He didn't ask me to explain at that time, or any other time afterwards, what the nature of the construction was, that I had been thinking of; but simply instructed me to keep to the spirit of the invention, as near as it was possible, to make the machine a practicable operating machine.

X-Q. 464. During the period referred to, and in connection with your plan for manufacturing bags by a different construction of machine; were you not studying out and trying to reach results in connection with revolving cylinders, and oscillating cylinders, and revolving former-plates, and oscillating former-plates, in relation to each other, for making paper bags?

A. No, I can't say that I particularly devoted any time to that; as I was instructed, under my agreement with the Eastern Paper Bag Company, to devote my whole time

and mind, to the best of my ability, in making this so-called Purvis machine a practical success; and was never requested by the Company, to study up anything else in the shape of a construction for to manufacture said bags, till the year 1895; and then I did so according to instructions, and worked out those plans to the best of my ability, which has been heretofore thoroughly explained.

X-Q. 465. Well my questions have referred to the year 1895. Did you not in that year, and prior to taking your drawings and sketches to Mr. Hunter, consider the construction and operation of revolving cylinders, and reciprocating or oscillating cylinders, and revolving former-plates, and reciprocating or oscillating former-plates, in connection with each other for paper bag machines; and in connection with inventions by you, therein?

A. I naturally considered all the different plans that I could think of, at that time, to make a successful operating machine for the purpose, and which did embody oscillating cylinders, rotating cylinders, oscillating former-plates, and the connections, and how to operate the same to the best advantage, in the simplest and most practical manner. I did this daily while I was making drawings and sketches, that were taken to Mr. Hunter's office; and as I have before stated, as I am naturally looking for a means of getting all the rotating motions I can, in any construction of machines for any purpose. I believe, as I have before stated, that the sketches and drawings taken to Mr. Hunter's office, by me, to make application for patent No. 558,969, embodied a rotary construction for both cylinder, and forming-plate, to the very best of my recollection.

X-Q. 466. And other sketches embodied a reciprocating or oscillating construction, for cylinder and former-plate did they not?

A. Yes, to the nearest of my recollection, patent No. 564,288, embodied a reciprocating motion for both cylinder and forming-plate; and the construction of patent that

wasn't granted, as far as I know, embodied two reciprocating plates, as near as I can remember.

X-Q. 467. Well, may there not have been other sketches, that you perhaps do not now remember, embodying what might be called a cross between the structure where both cylinder and plate oscillate, and the structure where both cylinder and plate rotate, namely, for a structure where the cylinder revolved and the plate oscillated?

The witness retires.

This question is objected to, as being a sample of the expensive practice which now prevails in patent cases, of stuffing the record with prolix cross-examination and irrelevant testimony; which practice was condemned in those words in the case of Ecaubert *v.* Appleton, 67 Fed. Rep. 924, and afterward condemned in 69 Fed. Rep. 343; and in 71 Fed. Rep. 193, and in 77 Fed. Rep. 829; and in 83 Fed. Rep. 310. The attention of the court is called to the fact that the question implies that the witness does not remember any such sketches as those called for by the question, and thereupon, asks the witness to conjecture whether such sketches may not have existed many years ago, and been forgotten by him. Defendant's counsel submits to the court, that such a question represents the utmost limit to which prolix cross-examination may extend.

A. No, I would say I am positive that there was no cross; as I remember distinctly now that the first construction of the three ideas, that I put on paper, in the shape of drawings and sketches, the two first (that is the one that isn't patented,) was two oscillating plates, no rotating cylinder at all; and the other No. 564,288, shows for itself, that it is a reciprocating cylinder, with a reciprocating or oscillating forming plate. And I am positive there were no sketches or drawings showing any cross between these constructions, and the one that I drew up the sketches for patent, No. 558,969; because I remember dis-

tinctly I had a good deal of trouble in getting the parts to work in unison or harmony with each other, and that the cylinder was of a construction to make two bags at one operation with two movable grippers, and I had considerable trouble, I remember, in working out the cams and gears, to get the former-plate to work in unison with the cylinder, or in other words, so that the sharp point of the forming plate would travel exactly at the same speed or velocity as the cylinder, while the bottom of said bag was being formed or drawn in proper shape.

X-Q. 467½. Having in mind, the suggestion of a reciprocating cylinder, with a reciprocating or oscillating forming-plate, as developed in patent, No. 564,288, and also having in mind, the suggestion of a completely revolving cylinder, with a completely revolving forming-plate, substantially as shown in Liddell Drawing, No. 1; what difficulty would there be in reaching the suggestion or the structure embodying a completely revolving cylinder, with a reciprocating or oscillating forming-plate, in view of your experience with paper bag machinery, and knowledge thereof, in the year 1895?

The witness retires.

This question is objected to; because it asks for expert testimony, from a mechanic, who, however expert he may be, in mechanical conception, is not expert in mechanical statement; and because it has no relevancy to the direct-examination.

A. In answer to that question; would say as I have very clearly and fully explained, as I think, in my previous testimony, the difficulty would be, if any, of making obliptic gears of the proper shape, to operate the forming-plate, in conjunction or unison with the rotating cylinder, and cam to raise and lower the arms, that support the train of gears, and the revolving plate, and to get them to work in perfect mechanical order, for the purpose required.

That would be the most difficult part, I think, in this construction of machine.

X-Q. 468. You have not answered my last question, which asked you to consider the structure of the Liddell patent, No. 564,288, and the structure of Liddell Drawing, No. 1, and state whether the revolving cylinder of Liddell Drawing No. 1, could not be utilized in connection with an oscillating or reciprocating former-plate, which last is suggested in patent, No. 564,288, and by the use of proper mechanisms to enable said cylinder and former-plate to work together in a bag machine?

The witness retires.

This question is objected to; because it asks for expert testimony, from a mechanic who is not expert in mechanical statement; and because it has no relevancy to the direct examination; and also, because it is ambiguous and likely to mislead both the witness and the court. Defendant's counsel suggests that if it were proper to question this witness upon this point, at all, it would be easy to make the question plain by asking the witness whether the revolving cylinder of Liddell Drawing, No. 1, can be combined in one machine with the oscillating former-plate of the Liddell patent, No. 564,288.

A. I would say at the present time, I am not fully prepared to positively state whether suggestions and alterations as explained by counsel, could be made, in order to make a machine of this character, practicable and useful, or not; but would say that I think that with the proper alterations, and changes, of the various parts, the cylinder shown in Liddell Drawing, No. 1, might be used in conjunction with the forming-plate of patent, No. 564,288, with all the proper alterations and changes that might become necessary, to make it operative. I simply say that I am not positive that that could not be accomplished; as I don't like to jump at conclusions, without thoroughly studying the matter over, and taking time to do so.

X-Q. 469. Now, after your employment by the Eastern Paper Bag Company terminated in November 1895, when was your next employment by that Company?

A. To the nearest of my recollection, my employment by said company did not terminate in November, 1895; but was requested or asked if I would extend it, I think, for two months.

X-Q. 470. Well, when did your first term of employment by the Eastern Paper Bag Company, in connection with their Philadelphia work, terminate?

A. To answer that question clearly, I thought it did expire in November, 1894, and my second contract which was a written contract, stating the salary I was to receive during that year, that is, the year 1895, expired to the nearest of my recollection, in October, 1895. And the next real work that I ever done for the Eastern Paper Bag Company, was making the sketches and drawings that I have heretofore explained, that were given to Mr. Ward for the purpose of helping him to make model representing Liddell patent, No. 558,969; unless it is considered work under my retainers, for the last two years, writing and corresponding and having interviews with Mr. Coburn. That's all the work that I remember of doing for the Company after the expiration of my contracts.

X-Q. 471. After November, 1895, and after any extension of your employment by the Eastern Paper Bag Company, for two months subsequent to November, 1895; when did you next receive any payment, from or through the Eastern Paper Bag Company, for any services rendered or to be rendered?

A. I have no recollection of receiving any pay or money for any services rendered by me, for said company, after this extension that I speak of, to the contract of 1895; other than I have already stated; the retainers I have received, for the years 1900, 1901, and 1902.

X-Q. 472. When was the first of these retainers paid to you?

A. To the nearest of my recollection, it may have been about the first of 1900, or the latter part of the year previous.

X-Q. 473. How much was the amount of this retainer, and by whom was it paid to you?

A. To the nearest of my recollection, the amount was three hundred ($300) dollars, paid to me by Mr. Charles F. Coburn.

X-Q. 474. Was that amount paid to you by Mr. Coburn in advance; and was any contract signed by you at the time of such payment?

A. That amount was paid to me by check from Mr. Coburn; and there was a contract signed, about that time, by Mr. Coburn and myself, in reference to the same.

X-Q. 475. Was the amount paid you on the day the contract was signed, or on some other day?

A. To the nearest of my recollection, it might be a month after the contract was signed, that I received a check for said purpose.

X-Q. 476. Now, at or about the time of expiration of this contract under retainer, just referred to, did you make another contract?

A. At the time referred to, I made another contract with Mr. Coburn, with the provision therein, stated, the alteration or request I wanted him to make in such contract, which was, to allow me to work and repair and make alterations upon any paper bag machines, of any character, with the exception of doing any work in that respect, for the Continental Paper Bag Company. That is the substance of the alteration or change in the contract, from what it originally was, to the nearest of my recollection.

X-Q. 477. Are you not mistaken in what you have just above said. Is it not a fact that the exception in this second contract, running from Dec. 1, 1900 was only for

flour-sack machines, and that those machines were the only ones you were allowed to do any kind of work for, without first obtaining the consent of Mr. Coburn in writing, under that contract?

A. I would say in answer to that, that after counsel remarks, it refreshes my memory, and I distinctly remember that the second year's contract under this retainer, by the Eastern Paper Bag Company, and myself, privileged me only to make flour sack machines, and not paper bag machines, whatsoever; but the third year's contract plainly states, and I have the contract still, and gives me full privilege to make or work or repair any paper bag machines, whatsoever, with the exception of what I have heretofore stated.

X-Q 478. Do you remember how much you received in connection with this second contract, for the year beginning December 1, 1900?

A. Yes, we had several letters in relation to the same, and I wanted a certain amount, and he didn't feel like giving it, so I accepted two hundred and fifty ($250) dollars, as near as I can remember.

X-Q. 479. When I refresh your recollection by telling you that you only got $200, do you not remember that you did only get $200?

A. I do not. I remember getting $50 about the time that the agreement was signed, and a check for $200, later on.

X-Q. 480. When I refresh your recollection by telling you that you are thinking of the last contract, beginning Dec. 1, 1901, and running through the year 1902, in connection with which you did receive $50, at the time the contract was signed, and $200, afterwards; do you not now remember that you only received $200, in connection with the second contract for retainer; running from Dec. 1, 1900, to Dec. 1, 1901, and that this $200, was paid you all at one time?

A. To the nearest of my recollection, in regard to the second contract, it is exactly as I have heretofore stated, and the third, and last contract we had, for said purpose, was given in the same manner. I remember receiving $50 and a balance of $250, if I am not mistaken, making $300, in all.

X-Q. 481. I now show you original of contract, dated New York, Nov. 14, 1901, and covering period from Dec. 1, 1901, to end of year 1902, and I ask you to look at that; state if the name William Liddell thereon, is your signature; and state if you remember signing that paper?

A. That is my signature, and I remember signing it.

X-Q. 482. Is the signature of Charles F. Coburn thereon, known to you as that of Charles F. Coburn, President of the Eastern Paper Bag Company; and did you see it written?

A. The signature on this contract is, from all the letters and correspondence I have had with him, Mr. Coburn's signature; and to the nearest of my recollection, we signed it together, at the same time.

X-Q. 483. After identifying and reading that contract, will you not admit that you were mistaken in testifying that you received three hundred ($300) dollars under that contract and for the period it covers?

A. From what the contract shows, I must have been mistaken in my former statement; but we had so many letters, and correspondence, I demanding $300, and he refusing to give any more than he had previously offered me, for said purpose, that it is possible and it seems probable now, that I may have thought I got $300, for that purpose, before stated.

X-Q. 484. After reading that contract dated Nov. 14, 1901, will you not admit that it was of that contract you were thinking when you testified that you got first $50, and later $200, under the previous contract, for year Dec. 1, 1900, to Dec. 1, 1901?

The witness retires.

This question is objected to; because it is immaterial to this case, whether the witness received $200, on the one hand; or received $250, on the other hand, for the year ending Dec. 1, 1901, from Mr. Coburn, or from the Eastern Paper Bag Company; and because the question whether the witness was in error when he said, in reply to X-Q. 478, that he accepted two hundred and fifty ($250) dollars, "as near as he could remember," for that year, is a question quite foreign to all proper cross-examination, and having no significance whatever, except to test the memory of the witness, on a subject quite foreign to the issues of this suit.

A. I am not at this time prepared to positively state whether it was at the time referred to or not, that I received the two hundred and fifty ($250) dollars; but if counsel will allow me, to bring my original contracts pertaining to the same matter referred to, I will bring them here to-morrow, and I think that it will show my statements to be correct; although I have no doubt and have no reason to think, that there has been any changes in the papers between Mr. Coburn and me, made by him, or anyone else; as I know him, and consider him to be an honorable and upright man.

X-Q. 485. The contract dated Nov. 14, 1901, about which I have been questioning you, reads as follows:

"NEW YORK, Nov. 14/1901.

In consideration of Fifty dollars to me paid by Chas. F. Coburn, of Boston, Mass. the receipt of which hereby acknowledged—the same to be a part payment for the renewal of the contract now existing between us—and if a further sum of 200. is paid to me on Jany 1, 1902 I agree to renew & extend the present existing contract between us—which expires on Dec 1/1901. and same to continue in full force & effect for one year longer—viz. during the

year 1902; with this exception—that I have the right of Inventing, or making any improvements, or working on Paper Bag Machines of any kind, for any party, excepting that I agree that whatever Inventions or Improvements made by me—shall not be in any way for the use or benefit of The Continental Paper Bag Co. or of Herman Elsas —or for any Co.—or person in any way connected with them—Nor shall the above named parties be allowed to buy—or lease—or Copy or acquire in any way the use of any Inventions or Improvements made by me—And I agree to help in every way I can said Coburn & Eastern Paper Bag Co. to maintain and defend the validity of all inventions & patents sold them by me—Witness my hand and seal day & year above written—

WM. LIDDELL [SEAL]
CHAS. F. COBURN. [SEAL]

Were you paid the fifty ($50) dollars, and the further sum of two hundred ($200) dollars mentioned in that contract?

A. As far as I can recollect at this time, I was; but as I have before stated, if counsel will allow me to produce said contracts, here in this case, I think it will prove my words right, and convince counsel to that effect.

X-Q. 486. Well you think your copy will prove you got three hundred ($300) dollars?

A. As I have before stated, that I believe that I got $300 twice; that is the first year, and the last year, of contracts; although I am not positive, without looking at the contracts, which I believe I have in my desk.

X-Q. 487. My point is, were you not paid the amount of money by Mr. Coburn, called for by this contract of November 14, 1901, and did you not understand this contract was in force to and including December 31, 1902?

A. Yes, I was paid this money by Mr. Coburn, as near

as I can remember; and it was for the purpose of complying with the contract of 1902, as counsel has stated.

X-Q. 488. My question asked did you not understand that this contract was in force to and including December 31, 1902?

A. Yes, I understood it was in force till the last of December, 1902.

X-Q. 489. Yet while this contract was in force, you signed and executed the contract you now have with the Continental Paper Bag Company, dated December 29, 1902. Is that so?

A. I fully acknowledge that I signed said contract with the Continental Company, some two days before the expiration of my contract with the Eastern Paper Bag Company, which I considered I had a justifiable and honorable right to do; as there was an understanding with Mr. Coburn and me that he would give me thirty days' notice of a renewal of contract. In reference to the case, to show my honor towards the Eastern Paper Bag Company, I declined to have any talk or explanation either between myself and Mr. Elsas, or between myself and Mr. Walker; till the contract between the Eastern Paper Bag Company and myself had expired.

It is hereby stipulated by and between the parties, to this case, that the defendant's time for taking evidence in support of the amendment to the answer, is hereby extended, till the end of April, 1903.

Adjourned until Wednesday, April 1, 1903, at 11 o'clock in the forenoon.

Wednesday, April 1, 1903, 11 o'clock A. M. Met pursuant to adjournment; counsel present as before.

X-Q. 490. Having examined your papers as requested, yesterday; will you not now admit that you were mistaken, in saying that the amount of retainer paid you by

Mr. Coburn for the year Dec. 1, 1900, to Dec. 1, 1901, was $250? Was it not in fact $200? Were you not also mistaken in saying that the amount paid you by Mr. Coburn for the year Dec. 1, 1899, to Dec. 1, 1900, was $300? Was it not in fact $250? Were you not also mistaken in saying that the amount paid you by Mr. Coburn under the contract running from Dec. 1, 1901, to Dec. 31, 1902, was $300? Was it not in fact $250?

The witness retires.

This question is objected to; because it seeks to probe the memory of the witness, upon a subject quite foreign to the case; and because the witness has explained that there was considerable negotiation between himself and Mr. Coburn, prior to finally fixing the amounts of money to be paid, for each of the three periods of time specified in the question, and that he gave the amounts as $300 for the first and third year, and $250 for the second year, as being his best recollection of those amounts, and did not state that he was certain in respect of that recollection.

A. I will acknowledge now, that I was mistaken in the sum of fifty ($50) dollars in each case; and made that statement yesterday, without having a minute of time to refresh my memory on the same, or see the contracts in reference to the same.

X-Q. 491. Can you produce here, the two original agreements or contracts between yourself and the Eastern Paper Bag Co., one dated Jan. 12, 1893, and the other dated Oct. 5, 1894, and under which, you worked for them at Philadelphia, etc., during the period covered by said contracts, as you have already testified?

A. Yes, I hand them to counsel, with my signatures attached thereto.

Complainant's counsel offers in evidence, the two contracts produced by the witness; and it is agreed by counsel on both sides, that the typewriter may make copies of the two contracts, and that those copies may be used in

the case, as evidence, with the same effect that the original copies would have.

Complainant's counsel requests that the two copies thus put in evidence may be marked, respectively, "Complainant's Exhibit, Liddell Contract of Jan. 12, 1893" and "Complainant's Exhibit, Liddell Contract of Oct. 5, 1894" and they are accordingly so marked.

Complainant's counsel offers in evidence, the original contract dated Nov. 14, 1901, between William Liddell and Charles F. Coburn, in the testimony above referred to, and same is marked "Complainant's Exhibit, Liddell Contract of Nov. 14, 1901".

X-Q. 492. Please look at the two letters now shown you, dated Nov. 13, 1902, and Nov. 20, 1902, respectively; and state, if you know, by whom they were written, and whether they were written to you, and whether you received them at about those dates?

A. I believe the two letters referred to were written by Mr. Charles F. Coburn, and they were written to me, on the dates, as shown in the letters.

"Complainant's counsel offers in evidence the two letters just identified by the witness, and they are marked respectively, "Complainant's Exhibit, Coburn-Liddell Letter of Nov. 13, 1902" and "Complainant's Exhibit, Coburn-Liddell Letter of Nov. 20, 1902".

It is agreed by counsel on both sides, that the typewriter may make copies of the two letters last offered in evidence, and that those copies may be marked respectively "Complainant's Exhibit, Coburn-Liddell Letter of Nov. 13, 1902" and "Complainant's Exhibit, Coburn-Liddell Letter of Nov. 20, 1902" and may be used in the case with the same effect as the original letters.

X-Q. 493. Was it before or after you signed the contract with the Continental Paper Bag Company, dated Dec. 29, 1902, that you received the letter from Mr. Walker, and came here, and had your first interview with him,

when he asked you some questions about dates and so forth, in reference to the patent in suit?

A. I believe it was before signing the contract, (some time,) with the Continental Co., that I received the letter from Mr. Walker, to call at his office ; but at that time, didn't fully understand what he wanted with me.

X-Q. 494. Did you not know that Mr. Albert H. Walker was counsel for the defendant, the Continental Paper Bag Company, in a suit pending on your patent, No. 558,969?

A. I had an idea he was ; although I had no means of proving it at that time.

X Q. 495. Now, at the time you came over and had that interview with Mr. Walker, you knew perfectly well he was lawyer or counsel for Mr. Elsas, and the Continental Paper Bag Company, did you not?

A. I am compelled to give the same answer, that I had no evidence or proof, to know that Mr. Walker was counsel in this case ; any more than what I surmised from the conversation I had with Mr. Walker.

X-Q. 496. Had you not been informed by Mr. Coburn or Mr. Ward, that defendant's counsel in this case was Mr. Walker?

A. I haven't the least recollection whatsoever, of Mr. Coburn either telling me wordly, or by letter, or Mr. Ward, either, stating who the counsel was, for the Continental Paper Bag Company. I might add although, I suspected and understood from the correspondence that I had with Mr. Coburn, that Mr. Walker was counsel for the Continental Paper Bag Company.

Complainant's counsel as Mr. Liddell has not with him, the letter he received from Mr. Walker, requests Mr. Walker to produce for inspection, his office copy of said letter, and if he cannot do that, to state on the record about the date when that letter was sent by Mr. Walker to Mr. Liddell.

Mr. Walker replies that he has diligently searched

through his office to find if possible, a copy of the letter in question; and that he was unable to find any copy of that letter. Mr. Walker adds that he believes that the letter was written by himself in person, with a pen, at night, when he had no facilities at hand, for making a copy of it, readily, and that he believes he did not make or keep any copy of that letter. Mr. Walker also adds that he remembers the contents of the letter, to be a mere request to call, without stating the subject upon which the call was desired. Mr. Walker states that the letter was written shortly before the end of November, 1902, and that Mr. Liddell called in pursuance of that letter, shortly before the first of December, 1902.

X-Q. 497. Now, suspecting and understanding that Mr. Walker was counsel for the Continental Paper Bag Company, whom you knew were defendants, in this suit, and whom you knew were trying to break down your patent sued on; how did it happen that you, immediately on receiving a letter from Mr. Walker, asking you to call on him, went over to his office, and had an interview with him?

A. As I have previously stated, very fully and clearly, as I think, my reason for calling upon Mr. Walker, at the particular time stated, I thought it would be nothing more than gentlemanly and honorable, to call and see what he had to say; but as I haveheretofore testified, I had made up my mind before coming here, positively, to give no information to Mr. Walker, in reference to anything that I knew about the case in suit, or any dates or figures, whereby priority could be established or shown, or any information whatsoever, that would injure or be detrimental to the Eastern Paper Bag Company; and giving my reason for not answering his questions; and that was, that I was under obligation, and in honor bound, to the Eastern Paper Bag Company, till the first of the year 1903. I told him after the expiration of that contract, that I might be able

to talk on the subject, providing the contract with the Eastern Paper Bag Company was not renewed. I left him then, and he made the remark, as I went out of the door, that he thought that a man who was honorable to one concern would be honorable to another, and I heard no more from him, as I remember, for some time.

X-Q. 498. After having this interview with Mr. Walker, did you notify Mr. Coburn, or myself, or the Eastern Paper Bag Company, that you had been asked to go to Mr. Walker's office and had gone there, and had had such an interview? I mean did you notify us prior to January 1, 1903?

A. I have no recollection of writing to Mr. Coburn or to counsel, or making any remarks that I had been to Mr. Walker's office at that time. I was very busy at that time, and thought the matter of no consequence, seeing the way that I had acted and being so reserved, in that interview with counsel, Walker, referred to.

X-Q. 499. During the period you were negotiating with Mr. Elsas, or anyone else representing the Continental Paper Bag Company, with reference to this contract which you signed on December 29, 1902; did you in any way notify Mr. Coburn or the Eastern Paper Bag Company, or my firm, or myself, as their counsel, that you were negotiating for a contract with the Continental Paper Bag Company?

A. Not that I remember of; but as I have heretofore very clearly and fully stated, that for a long time, Mr. Coburn had requested me to call upon Mr. Elsas, and make some arrangement to get work, or position, with the Continental Paper Bag Company. He has written me many letters to that effect; and under these circumstances, I could have made an agreement with the Continental Company, long before I did; but on account of other business, that I was obligated to complete, I didn't do so; and in reference to negotiating with Mr. Elsas, at any time previ-

ous to the first of 1903, I did nothing but what Mr. Coburn wished me to do, and what I had tried to do to comply with his request, till the latter part of December, 1902, when I did sign a contract with the Continental Paper Bag Company; and as I have previously remarked, that I claim I had an honorable and just right to do so; as the understanding between him and I, was that he would give me thirty days' notice if he wanted a new contract.

X-Q. 500. Do you really mean to testify, that in entering into this contract of December 29, 1902, with the Continental Paper Bag Company, defendant in this case, and who you well knew were trying to break down your patent in suit, you believed you were doing exactly what Mr. Coburn and the Eastern Paper Bag Company wished you to do; and that in entering into such contract without any notice to Coburn or the Eastern Paper Bag Company, you were doing exactly what they wished you to do?

A. Well, it would be a hard thing for me to know what they wished me to do; but I repeat what I said before; that I complied in every way with the contract and agreement I had with the Company, and up till December 29, 1902, and hearing nothing from Mr. Coburn or any of the Company, in reference to renewing the contract, and I having as I say an understanding, between Mr. Coburn and myself, to give me thirty days' notice, in case they did want to renew it; I considered I had a just right, and was acting perfectly honorable, by signing this contract two days previous to the expiration of the contract with the Eastern Paper Bag Company.

X-Q. 501. If you thought you were acting in a perfectly honorable manner, why did you not, after signing that contract with the Continental Co., on December 29, 1902, notify Mr. Coburn that you had signed such a contract?

A. I think I can answer that very clearly. Between the time of signing this contract with the Continental Paper Bag Company, and seeing Mr. Coburn at

the Fifth Avenue Hotel, at his request, in the early part of January, 1903, as I have heretofore stated, that he wrote me to call at the Fifth Avenue Hotel, and I could not call that day on account of business; but sent him a dispatch at the Fifth Avenue Hotel, that same evening, that I would call there and see him between one and two o'clock; and I did call, and we had conversation, in a general way, and finally he asked me if I would renew the contract for the year 1903. I told him I was sorry to say that I could not. He asked me the reason why. I told him that I had already signed a contract with another party. And after talking some time he asked me who the party was. I told him that it was the Continental Company, that I had made a contract with. Then he asked me, to the best of my recollection, what they wanted me to do. I told him I didn't know exactly. But I thought it was for the purpose of doing some work on bag machines, probably improving on what they had already made, and making other alterations, and so forth. He said he thought it might be a good thing. I said I hope it would. And we talked about fifteen, twenty minutes more, and had some refreshments, and parted the best of friends.

X-Q. 502. Mr. Coburn came on to New York and met you at the Fifth Avenue Hotel, and had the interview you mention in the last answer, during the week after Friday, January 23, 1903. Now up to that time, when you did have that interview, you had never notified him or the Eastern Paper Bag Company in any way, of this contract of December 29, 1902, with the Continental Paper Bag Company, had you?

A. No, I did not; and neither did I consider that I was in any way obligated to do so; as my contract with the Eastern Paper Bag Company had expired, and as a matter of fact, our connections severed; and I had made this contract as I thought I was perfectly justified in doing, and under no obligation to notify any member of the

Eastern Paper Bag Company up till January 1, 1903; although I could certainly have done it if I thought it would have been of any use or benefit to Mr. Coburn.

X-Q. 503. When was anything first said to you in any way, by any representative of the Continental Paper Bag Company in regard to making a contract or arrangement with them, which should start immediately after your contract with the Eastern Paper Bag Company or Mr. Coburn expired on Dec. 31, 1902?

A. That would be a difficult matter for me to recollect, as I had so many meetings for that purpose at Mr. Coburn's request; and to make it brief and short, I would state that I have no recollection of coming to any understanding definitely about making a contract with the Continental Paper Bag Company till December 29, 1902; and I didn't sign it there, but on the same evening the Continental Company sent two gentlemen to my house, the contract to be signed; and I signed it that night, which I believe was the 29th of December, which I felt that I had the full right and privilege to do so, in a gentlemanly and honorable manner.

X-Q 504. Do you mean to say that during the months prior to December 29, 1902, say Aug., Sept., Oct., Nov. and Dec., during which time you were receiving confidential letters from Mr. Coburn in regard to complainant's side of this case, and he was forwarding to you letters he received from me in regard thereto, and during which time you say you saw the Liddell model, and during which time you had the interview with me of Sept. 8, 1902, and were communicating with Mr. Ward, in connection with this case; that during this same period you were negotiating with Mr. Elsas, or some representative of the Continental Paper Bag Co., about going into their employ the day after Dec. 31, 1902, when your contract with Mr. Coburn expired?

The witness retires.

1670

This question is objected to; because it unnecessarily recites numerous other things which complainant's counsel implies the witness did during the year 1902, in addition to whatever he did in respect of negotiating with the Continental Paper Bag Company for the contract of Dec. 29, 1902; and thus introduces much immateriality and confusion into the question.

A. I fully testified to that fact before; and now acknowledge that I had many interviews with Mr. Elsas during the time stated by counsel, in order to get some position or work with the Continental Paper Bag Company. And I done the same at the request of Mr. Coburn. And wrote Mr. Coburn the result in a general way. And all this was done while under contract with said company, and up to the time I first saw counselor Betts, also interview with Mr. Ward to see Liddell model. About that time (September, 1902) I told Mr. Elsas that I could do no work for him till the first of the year 1903. This was before I first saw counselor Betts, to the best of my recollection. And I had to ask the Continental Company to allow me the months of January and February to finish up the work I was doing, which the contract will show.

X-Q. 505. How much money have you received down to to-day, under this contract of December 29, 1902; between you and the Continental Paper Bag Company?

A. I have received one hundred dollars in all, fifty dollars at the first of the months of January and February.

X-Q. 506. Well, under the contract there seems to be due to you $208.33, for the month of March, 1903. Have you not received that?

A. I haven't received it up to this morning. It may be at the house now.

X-Q. 507. You expect to receive it, do you not?

A. I certainly do.

X-Q. 508. What work have you done for the Conti-

nental Paper Bag Co., as a mechanical engineer, during the months of January, February and March, 1903?

A. Well, I must acknowledge that I haven't done a great deal, as all the contract calls for is whatever spare time I can devote in the evenings, to studying up or planning some new idea in the paper bag machine line, or any improvements or suggestions I could make.

X-Q. 509. You have not answered my question, which asks what actual work you have done for the Continental Paper Bag Company, as a mechanical engineer, during the months of January, February and March, 1903?

A. All the actual work that I have done for the Continental Company, during the months of January, February and March, 1903, is simply studying up and sketching out some new ideas on paper bag machines, also envelope machines, and the balance of the time has been taken up giving testimony here.

X-Q. 510. You have also devoted a large amount of time during said three months, to consultations with Mr. Walker, defendant's counsel, reading and swearing to affidavits, and other matters in connection with this case, including reading his letters to you, and preparing for your direct and particularly for your cross-examination, have you not?

A. No, I don't consider that I have taken up much of that time, with Mr. Walker, or reading and preparing to answer questions of either counsel; as I think all the interviews I had with Mr. Walker, were probably four or five at the most; and that, only a short time (an hour or more).

X-Q. 511. I note that this contract between you and the Continental Paper Bag Company, while specifying that you will work as "mechanical engineer" and giving a number of details in that connection, and specifying amounts you are to be paid, etc., says nothing whatever about your patent, No. 558,969, in suit, and nothing what-

ever about your giving any testimony in this case, or making affidavits therein, or consulting with defendant's counsel in regard to your patent, or giving defendant's counsel, and defendant, information in regard to time when you first got up the invention in controversy, or whether you did or did not make the invention covered by the patent, and so forth, and so forth. How did you happen to leave out of this contract, these matters to which since Jan. 1, 1903, you have devoted so much of your time valuable, presumably, as "mechanical engineer" to the Continental Paper Bag Company?

A. I would simply answer that question, by saying, that I had no hand in the making of the contract; but the first copy of the said contract was drawn up, I had some amendments made to it, and the two months granted to me was one of them, to finish up the work I was at, and on that same day, the original contract was drawn up, with the amendments made, and the same brought to my house, that same evening; and I signed it, after looking it over, to see if it was satisfactory to me; and didn't consider that I had any right to include anything in reference to patent in suit, in any shape or form.

X-Q. 512. Who was it brought this contract over to you to sign?

A. Two gentlemen from the Continental Company, between twenty-five or thirty years old; I think one was the Secretary of the Company, although I am not sure.

X-Q. 513. How did it happen that under this contract which makes no mention of the patent in suit, or of your doing anything for the Continental Company in relation to it, the first thing you did, so far as appears, was to come over to Mr. Walker's office, and consult with him as to the proposition of whether the structure of the patent was operative or not?

A. I simply state as I have testified heretofore, that I

called at Mr. Walker's office at his request, not knowing particularly or definitely what he wanted of me.

X-Q 514. And when Mr. Walker began to question you about the patent in suit, and whether it was operative or not, you had no hesitation whatever, in fully revealing to him, anything you knew or thought you knew, or remembered, or thought you remembered, about the early details of your invention; even though you had assigned the patent, and up to December 31, 1902, at least, had been under contract with complainant, in which you said, "I agree to help in every way I can said Coburn and Eastern Paper Bag Co., to maintain and defend the validity of all inventions and patents sold them by me". I refer to the interview of January 22, 1903.

A. At that time stated, I had no reason to not reveal or answer questions given by Mr. Walker, in reference to the case in suit; as I considered myself entirely at liberty to do so, my contract and obligations with the Eastern Paper Bag Company having expired; and I just answered his questions as correctly and truthfully as I could remember, at that time.

X-Q. 515. But your contract with the Continental Paper Bag Company does not specify that you shall reveal the history of your patent in suit, or that you shall become a witness for the defendant in this case. What was there which obligated you to go to Mr. Walker's office on his written notice or call, and when you got there, to answer any questions he chose to ask you about this patent; and to sign affidavits he drew for you; and to make sketches and drawings he asked you to make; and to consult with him as to the testimony you should give; and finally to go on the witness stand and swear that you never made the invention, which on January 7, 1896, you swore you did make, in swearing to the application papers therefor, at Mr. Hunter's office?

A. I would simply answer that by saying that I did

not reveal or explain anything in connection with the patent in suit; or have any conversation with Mr. Walker, or give him any information, till after the expiration of the contract with the Eastern Paper Bag Company. I was under no obligation whatever in any shape or form, further than to call upon Mr. Walker, to find out what he wanted of me. And I gave no sketches or drawings or models, or any affidavits, or testimony whatsoever, till after the contract expired with the Eastern Paper Bag Company.

X-Q. 516. Don't you know that this contract of December 29, 1902, is a fake on its face; and that the real object of that contract was to obtain you, as the patentee of the patent in suit, and get you into the service of the defendant, and to get your testimony, to whatever extent it could be obtained, as against the patent, and to keep you from being available to the complainant, as a witness?

A. I have no knowledge of the contract being a fake; and very much to the contrary. If I could have been disengaged considerable time previous to making this contract, before ever I came in connection with this case, I could have had the same contract; and I believe conscientiously and honestly, that this contract is made out absolutely for my services, in what I may do hereafter, in regard to improving or making new machines, in the shape of bag machines, or any other machinery the Company may want. And I think that the assertion made by counsel, is absurd; because everything that I have done in connection with that contract, or anything else in connection with this case, has been in every way honorable on my part; and the reason I think that the contract is no fake, I could have had that same contract for the same considerations, for my services, considerable time ago.

X-Q. 517. I have no doubt of that, at any time since this suit began; but I notice that the actual period of the

contract is for the eight months from Jan. 1, 1903, to Aug. 31, 1903, (with an option to Continental Co., to renew on notice). Did you not understand, when you signed that contract, and do you not now understand, that it was drawn for that originally comparatively short period, so as to cover the probable period within which testimony in this case would be closed, and to keep you in defendant's employ during that period?

A. I did not; and in proof of that, when I was requested how long I wanted to make that contract, I believe I stated six months; because I didn't know how I would like the position or where I would be placed, in Maine or elsewhere; and I prefer to make a short contract with parties I have never had any dealings with before, particularly; and as I was then engaged and could be still engaged for the same parties, I wasn't in need to accept anything that wouldn't suit me.

X-Q. 518. Well, how do you like the position where you are actually placed, as a witness testifying to the invalidity of the patent, to whose application papers you swore, and which you assigned to the Eastern Paper Bag Company, in whose employ you were up to December 31, 1902; and which patent you agreed to maintain and defend?

The witness retires.

This question is objected to; as constituting mere abuse of the witness, without any foundation, even for severe criticism; because the witness has not testified to the invalidity of the patent in question, but has only testified to some facts back of that patent, without expressing any opinion or even appearing to know, what effect those facts may have upon that validity; and because the witness did not agree to maintain and defend the patent in question, but only to help in every way he can to maintain and defend the validity of all inventions and patents sold by him; and because this agreement to "help" did not im-

ply any promise to suppress the truth in respect of these inventions and patents.

This question is also objected to; because it amounts only to asking the witness, how he likes the cross-examination, to which he has been subjected for more than ten days, by complainant's counsel; and because that question is immaterial to this suit.

Mr. Walker calls the attention of the court, to the flagrant disregard by complainant's counsel, during this cross-examination, of those repeated admonitions which several United States Circuit Courts, have given, to counsel in patent cases, to refrain from stuffing the record with prolix cross-examination; which admonitions are to be found in 67 Fed. Rep. 924; 69 Fed. Rep. 343; 71 Fed. Rep. 193; 77 Fed. Rep. 829; and 83 Fed. Rep. 310. And the attention of the court is particularly called to the case in 71 Fed. Rep. 193, where his Honor Judge TOWNSEND, holding the United States Circuit Court, for the District of Connecticut, in speaking of the padding of patent cases with unnecessary matter, (in a case in which Mr. Betts was one of the counsel censured,) said: "This rapidly growing abuse in patent suits, if persisted in, must seriously interfere with the present practice of presenting, in an opinion, the results of the full consideration of all the important issues in such cases. If admonition will not answer, the next step must be the punishment of the offending party, by the imposition of costs."

Mr. Walker calls the attention of the court, to the fact that one of the very same counsel who was thus severely admonished, by Judge Townsend, is chargeable in this case, with the very same misconduct, which Judge Townsend censured in that case; and is therefore particularly amenable to the punishment which Judge Townsend there felt compelled upon to foretell.

Complainant's counsel, Mr. Betts, characterizes the statement of Mr. Walker, above, in reference to the case

decided by Judge Townsend, as inaccurate and unfairly expressed. No individuals or even firms were specifically mentioned. Judge Townsend's statement is a general one, relating to what he considered an unnecessarily long record, in that case. The Judge does not specify in any way, even who is the offending party, as between complainant, and defendant. There is no mention of counsel now taking the testimony individually, nor of any other counsel, individually, in connection with Judge Townsend's statement. There is merely the usual heading before the opinion begins, setting forth counsel as follows: "Betts, Hyde & Betts, for complainant." "Kerr & Curtis, Wetmore & Jenner, and Charles A. Terry, for defendant". Fed. Rep. Vol. 71, p. 193, lines 1 to 3.

In regard to Mr. Walker's personal strictures, as relating to those of Judge Townsend, and other judges, complainant's counsel ventures to remark that Mr. Walker is no Judge.

Mr. Walker asks Mr. S. R. Betts,(who is the particular Mr. Betts who has conducted the present cross-examination of Mr. Liddell,) whether he was not the particular member of the firm of Betts, Hyde & Betts who had charge of taking the complainant's testimony, and of cross-examining the defendant's witnesses in the case in 71 Fed. Rep., 193, in which Judge Townsend used the language which he did use relevant to what he called "this rapidly growing abuse in patent suits".

Complainant's counsel states that he did take some but not all, of complainant's testimony in the case referred to, and did cross-examine some, but not all, of defendant's witnesses therein, to the best of his recollection; but his recollection is that the very extended record in that case on both sides, was to a large extent due to the introduction of voluminous exhibits, and certain records of testimony from other cases.

A. In answer to that, I would certainly say that I am

not much in love with it; and the sooner it is through the better, as far as I am concerned.

X-Q. 519 Please look at this letter dated Thursday, February 26, 1903, and addressed to you, and signed "yours truly, Albert H. Walker" and state whether you ever received such a letter; about when you received it; and whether you carefully read it?

A. Yes, I received this letter, I believe from Albert H. Walker, on the date mentioned in letter, or the following day, and read over all the contents particularly.

Complainant's counsel requests defendant's counsel to admit that the letter thus produced, was signed by him, defendant's counsel, Albert H. Walker, and sent to William Liddell, the witness, on February 26, 1903.

Defendant's counsel is very willing to make the admission asked for, and does hereby make that admission.

Complainant's counsel offers in evidence, the letter of February 26, 1903, from Mr. Walker to the witness, just identified, and the same is marked "Complainant's Exhibit, Walker-Liddell Letter of February 26, 1903".

Cross-examination closed.

Adjourned until Thursday, April 2, 1903, 11 o'clock A. M.

Thursday, April 2, 1903, 11 o'clock, A. M. Met pursuant to adjournment; counsel present as before.

Re-direct examination by Mr. Walker:

R-D-Q. 520. Your deposition now amounts to about seventy thousand words, nearly four-fifths of which are in the cross-examination. Now, I ask you to state whether you have yourself read that deposition, or any part thereof?

A. No, I haven't read the deposition, or any part of it. I never got a chance to look at it.

R-D-Q. 521. I myself, heard, and carefully noted in my

mind, every one of the questions and answers, contained in that deposition, as they were dictated to the typewriter; and I have also read every one of those questions and answers, several times, and I have carefully analyzed and compared all parts of the deposition; and I have found surprisingly few errors therein, which can possibly be ascribed to yourself. But I have found a few contradictions, to which I will call your attention, and give you an opportunity to explain how they probably occurred, and also to give you an opportunity to state what the fact was, upon the points involved in those contradictions.

First, it appears in your answer to Q. 88, that the drawings or sketches which you took to Mr. Hunter, for the application for the patent in suit, were said by you to be "crude"; whereas, in your answer to X-Q. 189, in speaking of those same sketches and drawings, you said they were "good". And whereas, in reply to X-Q. 236, you again spoke of the same sketches and drawings, and said they were "crude".

Now, the word "crude" and the word "good" have a similar sound, and it is possible that the typewriter misunderstood you, in one of the three cases, or in two of the three cases; or it is possible, that you mis-spoke yourself, in one of the three cases, or in two of the three cases; or it is possible that you intended in two cases to call those drawings and sketches "crude" and intended in the other case to call them "good". Now, having called your attention to this contradiction, I give you this opportunity to account for it, and to state again, whether those drawings and sketches were "good" or were "crude"?

A. The drawings and sketches that I made for application for patent in suit, I have tried to explain all along in this testimony, that I considered them crude and incomplete; and to make the answer brief, I would simply say that I never intended to state that said sketches were good;

but the word "crude" is what I think I said; and it may be, (on account of my pronunciation, as the word crude and the word good, sound very much alike,) the typewriter misunderstood me.

R-D-Q. 522. In many places in your testimony, including your answer to X-Q. 237, you say that the forming-plate shown in the patent in suit, is an oscillating forming-plate; but in your answer to X-Q. 200, you incidentally spoke of that plate, as "the revolving plate shown in patent in suit". Now please to state whether you ever intended to call that forming-plate a revolving plate; and if not, please to state how you happened to do so, in that incidental reference to it in reply to X-Q. 200?

A. I never intended to call the forming-plate in patent in suit, a revolving-plate; and it must have been I didn't understand the question put to me, at that time; as the motion of the forming-plate in patent as issued, plainly shows an oscillating or reciprocating motion.

R-D-Q. 523. In your answers to Qs. 49 to 84, inclusive, you elaborately explained that Liddell Drawing, No. 1, was made by Mr. King, under your direction, to represent the crude sketches and drawings which you took to Mr. Hunter, for the application for the patent in suit, No. 558,969; but in your answer to X Q. 342, you stated that what you took to Mr. Hunter was not substantially the same as Liddell Drawing, No. 1, but was somewhat radically different; though a few minutes afterward, in your answer to X-Q. 349, you again explained that the Liddell Drawing, No. 1, was made under your direction, for the purpose of showing the character of the drawing which you did take to Mr. Hunter. In your answer to X-Q. 356, you said that counsel for the complainant had several times, during your examination, put questions to you, in a very compound and complicated manner, and that you thought it was done simply for the purpose of getting you excited and nervous, and

"rattled", for the object, as you believed, of getting you to say something that would probably contradict your previous testimony, or that would be untruthful. Now, Mr. Liddell, it may appear upon the face of your answer to X-Q. 342, that you did therein, contradict the elaborate testimony which you had already given, and also contradict the elaborate testimony which you afterward gave, upon this subject; and it is due to you to give you a full opportunity to explain how that apparent contradiction could have arisen; and also to testify anew, upon the question whether Liddell Drawing, No. 1, does or does not, substantially represent the sketches and drawings which you took to Mr. Hunter, for the application for the patent in suit, No. 558,969?

Objected to as not fully stating the evidence which is matter of record, and also as leading the witness.

A. I will state that the only reason I can conceive for the contradiction in my statement, was the compound and complicated manner of question which were asked me at that time; and I must have thought that he had reference to something different, from explaining whether the Liddell Drawing, No. 1, was a true representation of what I fully believe to the best of my knowledge that I took to Mr. Hunter's office, at the time stated, to make application for patent on the same. And I have all through my testimony, and now state to the best of my knowledge and recollection, this Liddell Drawing, No. 1, is as near to the crude drawings and sketches that I took to Mr. Hunter, (at the time before stated, for the said purpose,) as I can remember, and I think I remember it pretty well.

R-D-Q. 524. In your reply to X-Q. 345, you said that the radical difference between Liddell Drawing, No. 1, and what you took to Mr. Hunter, to start the application for the patent in suit, consisted in operating the forming-plate by means of a continuous revolution, by means of "obliptic" or eccentric gears and intermediate gears, to operate

1682

the same, and a continuous rotary motion. Now please to state whether the Liddell Drawing, No. 1, agrees or disagrees with the drawings which you took to Mr. Hunter, in showing a continuous rotary motion for the forming-plate, E, and in showing that that motion is produced by two "obliptic" or eccentric gears, and by intermediate gears?

Objected to as leading.

A. That same answer must have been given from a misunderstanding of the question asked, the same as in the former question. I never meant to state or have it understood in any shape or form, that there was a radical change between Liddell Drawing, No. 1, and the sketches and drawings that I originally took to Mr. Hunter to make application, for patent in suit. And I think that all my testimony combined will prove what I meant. And I would say as my testimony reads, and question put to me by Mr. Walker, was a misunderstanding on my part, what the question was, that was put to me by counsel Betts, fully.

R-D-Q. 455. In X-Q. 343, you were asked by Mr. Betts, when it was that you got up what is shown in Liddell Drawing, No. 1; and to that question, you replied as follows: "To the nearest of my recollection, it was some time in January this year, that I made a pasteboard model, and ome rough sketch; also some explanations, which I gave to Mr. King, at my house, on Sunday evening, about the time stated." Now, I do not detect any contradiction between that answer and any other part of your testimony; but it is possible that X-Q. 343 may have been intended by Mr. Betts, in a different sense from what it was understood by you; and it is possible that that question might be understood by the court in a different sense from what it was understood by you. Therefore, to avoid the possibility of any misunderstanding, I ask you whether you meant to say in reply to X-Q. 343, that you got up Liddell Drawing, No. 1, in January of this year, on the one hand; or whether, on the other hand, you meant to say that you

got up the invention shown in Liddell Drawing, No. 1, in January of this year?

A. In reply to that; I distinctly understood when counsel Betts asked me that question referred to, and I think his words express the same, as I understood, he referred direct to this sketch, Liddell Drawing, No. 1, and not what the original drawings or sketches contained; and I answered him in as good a way as I could, explaining that I simply made, or had made, a drawing about the first of January, representing to the nearest of my recollection, what my original sketches and drawings were, that I took to Mr. Hunter's office, at the time stated, for making application for patent, on the same. I would say I positively had no reference to the original sketches and drawings, at that time; as I understood the question was to ascertain when I had this original drawing, Liddell Drawing, No. 1, made.

R-D-Q. 525. Your answers to R-D-Qs. 521 to 524 satisfactorily explain away all the contradictions that I have been able to find in your long deposition of seventy thousand words; and I have no more questions to ask you, except to ask you to identify and prove three papers which are relevant to your cross-examination, and which I now show you.

Please therefore, to look at a letter dated "Boston, Nov. 15, 1901, and addressed to Mr. Wm. Liddell and signed Coburn", and state whether that letter is in the handwriting of Mr. Charles F. Coburn, the President of the Eastern Paper Bag Company?

Complainant's counsel objects to the question as not proper re-direct; and also calls attention to the fact that the letter in the hands of Mr. Walker, defendant's counsel, is a personal communication from Mr. Coburn to Mr. Wm. Liddell, the witness, under date of November 15, 1901, and written during a period when Mr. Liddell was

under retainer of the Eastern Paper Bag Co., or Mr. Charles F. Coburn, its President.

A. Yes, from all the letters I have received from Mr. Coburn, I would say that this is his handwriting; and I would like to state that I would never have brought these letters or correspondence to this court, had not counsel Betts, requested me to bring all my contracts that I ever had with the Eastern Paper Bag Company, and any correspondence pertaining to the case in suit.

Complainant's counsel, Mr. Betts, denies most emphatically, that either on the record or off of it, he has asked Mr. Liddell to produce here any correspondence he ever had with the Eastern Paper Bag Company, or any correspondence pertaining to the case in suit. Complainant's counsel did ask Mr. Liddell to produce the original contracts between him and the Eastern Paper Bag Company, or Mr. Coburn, which have been produced and offered in evidence, some of them. Mr. Betts has also offered in evidence the two letters of Nov. 13, and Nov. 20, from Mr. Coburn to Mr. Liddell, and which were shown to Mr. Betts by Mr. Liddell; but they were not called for by complainant's counsel. And even if complainant's counsel had called for correspondence between Mr. Liddell and the Eastern Paper Bag Co., and Mr. Coburn, but had not referred to it in the record specifically, or offered it in evidence, that would give no excuse for Mr. Liddell handing over personal correspondence connected with his relations to the Eastern Paper Bag Co., and Mr. Coburn, during the period when Liddell was retained in the interest of present complainant, handing such correspondence over to Mr. Walker, defendant's counsel, to make use of in this case.

Mr. Walker states to the court, that at the adjournment on Tuesday evening, March 31, 1903, Mr. Betts requested the witness to bring with him, on the following day, his original contracts with the Eastern Paper Bag

Company; and Mr. Walker is under the impression that that request included also any correspondence he may have had with the Eastern Paper Bag Company, or with Mr. Coburn, relevant to those contracts.

Accordingly, on Wednesday morning, April 1, the witness brought with him, and laid down upon the table, (around which Mr. Walker, Mr. Betts, and the witness, have been working together, throughout the taking of this deposition,) a considerable number of documents and letters; and the witness informed Mr. Betts, that those documents and letters comprised what he had been able to find, in pursuance of the request the day before. All those things were thus submitted to the examination of counsel on both sides; but Mr. Liddell did not hand any of those things to Mr. Walker, or make any statement to Mr. Walker about any of them, or do or say anything toward getting them into Mr. Walker's possession, except simply to lay them down on the table, and tell Mr. Betts that he had brought them here in pursuance of his request, or words to that effect.

Thereupon, Mr. Betts selected from the papers which Mr. Liddell thus produced, not only the contracts, between Mr. Liddell and the Eastern Paper Bag Company, of January 13, 1893, and Oct. 5, 1894, but also two letters written by Mr. Coburn to Mr. Liddell, Nov. 13, 1902, and Nov. 20, 1902, and then put those two contracts and those two letters in evidence in the case; leaving all the other documents which Mr. Liddell had produced, lying on the table.

Under these circumstances, Mr. Walker examined those other documents to see whether they contained anything relevant to the two contracts or to the two letters, which Mr. Betts had put in evidence; or relevant to the other contract of Nov. 14, 1901, between Mr. Liddell and Mr. Coburn, which Mr. Betts also put in evidence; and which examination disclosed three letters which do appear to be

thus relevant, to some of the documents which Mr. Betts thus put in evidence.

For these reasons, Mr. Walker submits to the court, that it was absurd for Mr. Betts, to insert in the record, his long statement after the answer to R-D-Q. 525, and which statement undertook to censure the witness for handing over to Mr. Walker, personal correspondence between him and the Eastern Paper Bag Company; and Mr. Walker also submits to the court, that it is absurd for Mr. Betts, after having taken his pick of the documents produced by the witness, to object to the reception of other documents thus produced, and which relate to the same subjects as the documents put in evidence by Mr. Betts.

Complainant's counsel while having no doubt that defendant and its counsel will learn from Mr. Liddell anything which may suit the defendant to ascertain, even though it related to the period during which Mr. Liddell was under the retainer of the Eastern Paper Bag Company, complainant, or their counsel, yet desired to note on the record the incident referred to, as illustrating the readiness of defendant and its counsel to avail themselves of any such material in Mr. Liddell's possession.

Mr. Walker offers in evidence the letter last identified by the witness, and requests that it be marked "Defendant's Exhibit, Coburn's letter to Liddell of Nov. 15, 1901" and it is accordingly so marked.

Objected to as immaterial.

Mr. Walker claims that the letter thus objected to, is material, because it was written the next day after Complainant's Exhibit, Liddell Contract of Nov. 14, 1901, was executed, and because it refers to that contract and explains what purpose Mr. Coburn had in making that contract.

And Mr. Walker suggests to the court that the reading of the letter of Nov. 15, 1901, in connection with the contract of Nov. 14, 1901, will show why Mr. Betts was so

anxious to suppress that letter while invoking that contract.

R-D-Q. 526. Please look at the letter I now show you dated Boston, Dec. 9, 1899, and addressed to Mr. Wm. Liddell, and signed Chas. F. Coburn, and state whether that letter is in the handwriting of Charles F. Coburn, the President of the Eastern Paper Bag Company?

Same objection and statement as to R-D-Q. 525.

A. Yes, I believe it is his handwriting, from all the correspondence I have had with him.

Mr. Walker offers in evidence, the letter identified by the witness, and requests that it be marked "Defendant's Exhibit, Coburn's Letter to Liddell, of Dec. 9, 1899" and it is accordingly so marked.

Same objection.

R-D-Q. 527. In reply to X-Q. 472, you stated that the first of the retainers paid to you by Mr. Coburn, for the years 1900, 1901 and 1902, was paid to you about the first of 1900, or the latter part of the year previous; and later in your cross examination, as I remember, it was developed that that contract was made in the latter part of 1899; namely, on December 1, 1899, to continue till December 1, 1900. I now ask you to state whether that contract of December 1, 1899, was the contract which was referred to in Mr. Coburn's letter of December 9, 1899, where that letter states that "Enclosed I hand you my check for two hundred and fifty ($250) dollars as called for by our contract of December 1, date".

Same objection.

A. Yes, this letter refers to the contract mentioned by counsel, Walker; as I had no other contracts with the Eastern Paper Bag Company, or with Mr. Coburn, at that time.

R-D-Q. 528. Now, I call your attention to the following language in Mr. Coburn's letter of Dec. 9, 1899: "I hear rumors of new machines being built and coming out, and

want to get all the information I can regarding them. If you have any applications for work, hear all they have to offer, and want, and advise with me." Please to state what party was referred to, by the word "they" in that language of that letter; by stating who it was that you were asked in that letter to hear all they have to offer, and want?

Same objection.

A. The party as I understood, from the letter sent me by Mr. Coburn, was to interview the parties interested in the Continental Paper Bag Company, and particularly, Mr. Elsas. As I was as anxious myself, as Mr. Coburn was, to find out the construction of the machines, and all the particulars in relation to the same; and would like to state here now, with permission of counsel, had I known before I got this letter, just mentioned, the contents of it, I would never have brought it here. The few letters that I brought here, were selected out of the many letters I received from Mr. Coburn, and as I understood when I was selecting those letters, for the purpose of bringing them here, I was very particular not to bring anything except what was pertaining to or in connection with the different contracts we had from time to time. And I would say that hereafter I will bring no more letters or private correspondence that Mr. Coburn and I, had during these three years, unless I am compelled to do so; as I consider it a private matter, that is, this correspondence, with me.

R-D-Q. 529. I call your attention to the following language in Mr. Coburn's letter to you of Nov. 15, 1901; namely; "I don't believe I shall want you for much, until after I find out if Elsas is infringing." Please to state whether that name "Elsas" refers to Mr. Herman Elsas, the President of the Continental Paper Bag Company?

Same objections as above.

A. Yes, that is, as I understand, his given name is

Herman; and he is the President of the Continental Company, as I understand.

R-D-Q. 530. I now show you an undated letter written in pencil, and directed to Mr. Coburn, and signed Wm. Liddell; which letter begins as follows: "yours of 20th with Mr. Betts' letter to you, enclosed", and I ask you to state whether the pencil letter I now show you, was written by you, to Mr. Coburn in reply to his letter to you of Nov. 20, 1902, which letter Mr. Betts put in evidence yesterday, and which letter I also show you?

Same objections.

A. This letter was written by me to Mr. Coburn; but this is simply a copy of the same letter that I sent Mr. Coburn, as I sometimes kept copies of correspondence with different parties; and this I fully believe, was written in reply to Mr. Coburn's letter of Nov. 20, 1902.

R-D-Q. 531. About how long after November 20, 1902, did you write to Mr. Coburn, your reply to that letter, of which you say the pencilled letter I last showed you, is a copy?

Same objections.

A. To the nearest of my recollection, it might have been the same day I received it, or it may have been several days afterwards (because I wasn't in the habit of replying very promptly, in some cases) but I don't think it could be more than two or three days after receiving the same.

R-D-Q. 532. Now, Mr. Coburn's letter was written to you in Boston, November 20, 1902; and would be naturally received by you in Brooklyn, November 21, 1902. I therefore inquire whether it would be nearly or quite correct to assume that your reply was written not later than November 25, 1902, and perhaps as early as November 21, 1902?

Same objection; and also as leading. The witness has already given his best recollection.

A. I couldn't give any definite date positively. I

simply think that it may have been the following day ; or it may have been several days after receiving this letter from Mr. Coburn, that I answered the same.

Mr. Walker offers in evidence the pencilled copy identified by the witness, as being a copy of his answer to the Coburn-Liddell letter of Nov. 20, 1902, and requests that it be marked "Defendant's Exhibit, Liddell Letter to Coburn in reply to the Coburn-Liddell Letter of Nov. 20, 1902" and it is accordingly so marked.

Objected to as immaterial.

R-D-Q. 533. Since putting R-D-Q. 525, it has occurred to me to ask you one or two questions in explanation of one part of your cross examination, not yet mentioned on re-direct examination. I refer to those cross-questions which asked you what you have done since January 1, 1903, in the way of mechanical engineering, for the Continental Paper Bag Company ; and on this point, I call your attention to the fact that your contract of December 29, 1902, with that Company, provides that during the months of January and February, you were to continue the work you were engaged on in December, 1902, and were to devote to the work of the Continental Paper Bag Company, only such time as you could find to spare, during those two months. Now please at first to confine your statements, to what you did in the way of mechanical engineering or planning improved machinery for the Continental Paper Bag Company, during the months of January and February, 1903 ; and give an account of what you thus did during those months, including any study that you may have made of the present paper bag machines of the Continental Company, with a view to their improvement, and everything else that you did, as a mechanical engineer or inventor, or otherwise, for the Continental Paper Bag Company, during those two months ; and not including anything that you did in connection with this litigation ?

A. During the two months mentioned ; this is January

and February, 1903; I devoted all the time that I could possibly spare, in the evenings, Sunday inclusive; to studying up some new construction of paper bag machine, also of the envelope machine, also some means whereby the present machines that the Continental Company have, for making S. O. S bags, can be simplified or improved; and I think, myself, that I worked pretty hard for all the money I have received, or promised to receive.

R-D-Q. 534. Do you remember coming to my office one evening about the fifth of February, 1903, and spending an hour or more studying the S. O. S. paper bag machine, which was then in my model-room, and which also, is there now; with a view to learn its construction in a general way, so as to be able to study and consider how it might be improved; and do you remember that I told you on that occasion that that paper bag machine is not perfect, because its tucker plate oscillates and does not revolve, and that I told you that if you could plan how to make that tucker-plate revolve instead of oscillate, you would be doing a very valuable work for the Continental Paper Bag Company?

Objected to as immaterial and not proper re-direct.

A. I remember distinctly of calling on Mr. Walker at his office, on or about that date, (I believe the date is correct, although I kept no memorandum of it;) and remember distinctly that Mr. Walker asked me to look at the machine now in his model-room, for the purpose of what he has just explained; that is, to think over and study up some way or means, if I could, to simplify the machine if possible, and particularly try and conceive some means to get the said forming-plate to revolve round and round continuously, as he thought it would be a good thing for the Company, and as I understood make the machine more commercially useful.

R-D-Q. 535. Now, it is true, is it not, as you understand, that many inventors have been diligently endeavoring for

1692

many years, to produce a machine for the manufacture of S. O. S. paper bags, to consist entirely of rotary motions; but that that result is so difficult of accomplishment, that it has never yet been reached by anybody, in a commercial machine, as far as you know?

Same objections.

A. Yes, I have believed and from all the information I have got on that particular line, that all the inventors that have been trying to construct a machine of that character, have been trying to get rotary motions, where it was practicable, and where the desired results could be attained. Of course I don't know the details and particular constructions of all the inventors, in that particular line, whether they have developed and got a machine into practicable shape of a rotary construction, for said purpose, or not.

R-D-Q. 538. Now it appears that your contract of December 29, 1902, with the Continental Paper Bag Company, provided that you were to receive $50. per month during the months of January and February, and $208.33 per month for each of the following six months: which would make $1,350.00, for eight months. Now, if you do succeed, during those eight months, in improving the Continental Paper Bag machines by substituting for the oscillating tucker-plate, a successful rotating tucker-plate, would you consider thirteen hundred and fifty dollars too much for you to receive for making that invention for the Continental Paper Bag Company?

Same objections.

A. I would consider that if I am able to accomplish and make a rotary tucker-plate or forming-plate, in place of an oscillating or reciprocating plate, successfully; and make a good working commercial machine, by the same means; I would consider the amount of what I am promised to receive, on the face of the contract, (and that is all, and every penny, that I am promised to get for the said pur-

pose,) I would consider that the Company was getting a very good thing for very little money.

R-D-Q. 539. Now, when an inventor undertakes to make a difficult invention, can he go at it as if he were sawing wood, and be sure every hour that he is producing something to show for his work, on the one hand; or must he, on the other hand, ponder and meditate long over the problem, and sometimes, study it for weeks or months without reaching any definite result to exhibit?

Same objections.

A. From my experience, inventing and constructing new machinery, of any character, especially when the construction is in any way complicated, it necessitates a good deal of thinking and planning, and sketching, and drawing, and throwing away or abandoning weeks and sometimes, months, of hard work and study; before you can reach a point where a man can get said machine in a satisfactory manner, to himself, or the parties it is designed for; and in my experience, I have spent years, in getting up some devices, before I could accomplish the result required or wanted; and during that time, I have thrown away more material than would make half a dozen of said machines.

R-D-Q. 540. Now, you began giving this deposition on Monday, March 16, 1903, and kept at work at it, until the end of that month; but I inquire of you, whether you felt able during the evenings of those days, to do much inventing in paper bag machinery, on the one hand; or whether on the other hand, you felt more like resting, after a day's labor in trying to understand the long and complicated cross-questions which Mr. Betts put to you?

Same objections.

A. During these days referred to, I am sorry to say that I last Sunday, I broke the Sabbath day by studying and looking over some sketches, that I had made in the early part of this year; and when I could get this witness

business off my mind, in the evenings, I did a little towards studying for the same object. But I thought it was necessary and to my benefit, to think over and try and conceive the questions that counsel, Betts, would probably put to me, and arrange my answers in a truthful and intelligent manner, as I could ; so that I wouldn't be accused of being either long winded in answering questions ; nor have him state as he did several times, that I hadn't answered his questions fully. So in preparing myself in that manner, it has taken over two-thirds of my time, including the time I have been here in this witness chair, and in preparing my answers for questions expected.

R-D-Q. 541. Now please to turn your attention and memory to the first two weeks in March, 1903, and state whether you devoted the whole of those two weeks, to your duties under the contract of December 29, 1902 ; and if not, state what else you did during those two weeks?

A. Yes, I consider that I devoted the whole of my time, in compliance with the contract between the Continental Company, and myself, as called for in contract ; with the exception of the days I spent here in this witness' chair, and the time that I formerly spoke of, studying up the questions that I thought might be asked me, and preparing my answers to the same. I've had no time to do anything else, as it occupied my time entirely, as I have already spoken ; and I might say pretty long hours at that ; twelve or fifteen hours sometimes a day.

R-D-Q. 542. Now, Mr. Liddell, I am going to state, in the present question, how it was that you were brought into this case, as a witness for the defendant ; and I am going to ask you whether that statement is correct ; and I don't care whether Mr. Betts objects to the question as leading or not.

Near the end of November, 1902, I invited you to come to this office, on a particular evening, without telling you

what I wanted to meet you for. You came in pursuance of that request, and met me for the first time in your life, in this office, one evening shortly before December 1, 1902. I asked you in substance, when it was that you made the invention, shown in the Liddell patent, No. 558,969 of April 28, 1896. And I continued to talk a little while, with a view to leading you into giving me that information. You listened attentively, without saying anything, until I was through talking, and then told me that you were not at liberty to give me any information about that patent, or the invention shown therein ; because you were under retainer to the Eastern Paper Bag Company, the owner of that patent, until the end of December, 1902. Thereupon you went away, and we did not meet again, until the evening of January 22, 1903, when you called upon me a second time, in pursuance of a second request, and which second request was sent you on or about January 20, 1903, and was the first you had heard from me, since you left my office in November, 1902. At that second meeting between us, on January 22, 1903, I showed you the model which is now marked "Defendant's Exhibit, Model of Liddell Patent, No. 558,969"; and I asked you again, as I had done in November, 1902, when it was that you made the invention shown in that model. Thereupon, you told me, that you did not make that invention, at all, in that form ; but that what you invented, for that purpose, included a revolving forming-plate, instead of an oscillating forming-plate. Thereupon, I asked you to explain to me, how, according to your invention, that forming-plate was made to revolve ; to which you at once replied that it was made to revolve by means of a train of gears, from the shaft which, in the model, carries the two cams ; and that two of those gears were "obliptic" or eccentric gears, and were made so, in order that the edge of the forming-plate might travel forward at the same speed as the cylinder below that edge, while folding the bag to

1696

be made by the machine. Thereupon, I asked you if you could and would make a model for me, exactly like that invention of yours. You replied that you could do so, but that you did not yourself, have the machinery or tools for producing that model, and did not have available time for making it. Thereupon, I asked you if you could show a draftsman how to make a drawing, to represent that invention of yours, and would do so, at my request. You answered yes, to this inquiry; and in pursuance of my request, you came again to my office the next evening. As soon as you came, I took you to the office of Mr. King, the draftsman, and introduced you to him, and told Mr. King to make a drawing for me at my expense, under your direction. Thereupon, I went away, leaving you and Mr. King together, and was not present at any time when you were making your explanations to Mr. King, and did not have any conversation with you upon the subject again, until Thursday evening, January 29, 1903; when you came again to my office, in pursuance of a note I sent you, requesting you to make that call. Up to this time, I had never said a word to you about desiring to take any affidavit from you, or any testimony from you, upon the subject, or upon any subject; but on Thursday evening, January 29, 1903, I presented to you, a drawing on tracing cloth, which I told you Mr. King had made in accordance with your directions to him. And I also told you that I had prepared an affidavit to go with that drawing; and I asked you to listen while I read that affidavit, with a view to seeing whether it was correct or not. You seemed surprised, that I had prepared an affidavit, for you, without asking you beforehand, whether you would make an affidavit; but I did not give you time to express that surprise, and simply went on and read the affidavit to you, without giving you a chance to find any fault with what I was doing. After the affidavit was read through, you told me that the drawing needed to have two changes made

in it, to be correct ; one of which consisted in inserting a key between the arm F, and the shaft f, and the other of which consisted in inserting two rivets, through the gear M′, so as to show that that gear was fastened to the gear K2 ; and you also told me that the affidavit was incorrect in several respects, some of which you had mentioned as I was reading it to you. Thereupon, I took you to Mr. King's office, and we asked him to insert the key and the rivets, and he did so at once, in ink. Thereupon, I asked you to take the affidavit which I had prepared, and the drawing, home with you, and keep them four days, until the evening of the following Monday, which was February 2, 1903, and to bring them back to me on that evening, with whatever corrections you found it proper to make in the affidavit.

On Monday evening, February 2, 1903, you came back to my office, and brought back the drawing which Mr. King had made, and brought back the affidavit which I had prepared, without any change in the drawing, but with numerous changes made with a pen, on the face of the affidavit. Thereupon, I read the amended affidavit to my typewriter-operator, and she made from that reading, a fully typewritten copy of the affidavit as you had amended it, or caused it to be amended ; and I added two paragraphs numbered 16 and 17, to the original draft for an affidavit, in order to explain some points not attended to in that original draft. The affidavit being thus completed, I read it again entirely through to you, and asked you to follow the reading by carefully examining the drawing, as I read, and you did thus attentively follow that reading. Thereupon, I asked you to sign the drawing (which had already been lettered Liddell Drawing, No. 1) and you did so ; and I brought a Notary Public into my private office where we were working together, and asked you to sign the affidavit and swear to it before that notary public, and you did so.

During all this time from January 22, 1903, to February 2, 1903, I said nothing to you whatever, as to what effect the facts stated in your affidavit would have, if any, upon the validity of the Liddell patent, No. 558,969. But I did not at any time, ask you to do anything, without giving you opportunity for full deliberation, and plenty of time to consider and recall to mind, the facts which were set forth in your affidavit, and illustrated in Liddell Drawing, No. 1, in connection with that affidavit.

Nothing was said between us, about any compensation you were to receive from anybody for calling upon me, or upon Mr. King, or for making your affidavit, or for doing anything else for me, until after the affidavit was made and signed and sworn to, on February 2, 1903; and even then, the subject of compensation was not first mentioned by you, but was first mentioned by me. In mentioning that subject, I told you that it was my custom to pay the bills and expenses incurred by me for my clients, as I went along, and to collect the money back again from my clients, with my own fees, afterwards. And I told you that I would be personally responsible for your compensation for all services rendered at my request, and that I would pay you for those services, at the same rate you would be earning, in other work, if you were not called upon to render those services for me; and I asked you what that rate would be. You replied that you were accustomed to receive about twenty-five hundred dollars a year for your services, which would be at the rate of about eight dollars a day. Thereupon I told you that I would pay you eight dollars a day, for all services rendered to me, and you said you were satisfied with that rate of compensation. Never at any time, have you asked me to give you any other compensation, or to cause any other compensation to be given to you, (for your services for me in this case or otherwise,) than eight dollars a day; and you have not even asked me as yet, to pay you any money on account of that

promise, and I have never yet paid you any money whatever, for anything that you have done in this case or for me, at any time.

I feel justified in putting this long leading question to you, because the honorable counsel for the complainant, Mr. Samuel R. Betts, now present, has insinuated over and over again, in the record of your deposition, that you (and inferentially myself) have been guilty of the crime of bribery, in what we have done together in respect of your testimony in this case. Please therefore, to state whether my account of the facts which I have set forth in R-D-Q. 542, is a true account of those facts?

Complainant's counsel objects to the above question, on the following grounds: 1. As shockingly, wilfully and confessedly leading. 2. As not proper re-direct in any shape, form or manner. 3. As an attempt by Mr. Walker, defendant's counsel, to testify on the record, and spread thereon, his own exact version of certain matters about which the witness has fully testified, and in regard to which Mr. Walker has not been sworn nor called as a witness, and does not offer himself for cross-examination. 4. As a vivid illustration of the methods which apparently have been and are being adopted, to make this witness a mouth-piece for putting on the record, the theories and propositions, not to say the hopes of defendant's counsel, Mr. Walker, in connection with the defense of this case. 5. Complainant's counsel will move to strike out this question, for the reasons above stated, and as utterly improper.

A. To that long and elaborate question, I will be as brief as possible; and I will state that I think that my previous testimony covers all the important points in this question. I think, if you look up the record, you will find I have been asked and have answered questions, covering all the essential points in this question put to me by counsel Walker. And I will start then, by saying that

I have never been prompted by counsel, Walker, to say anything in reference to my testimony; and I think the former testimony I have given, will show the absurdness and unreasonableness of remarks and the statement just already made, by counsel, Mr. Betts, when he says that I am simply a mouth-piece for Mr. Walker. I denounce that as false. That I have used my own words only, and in as truthful a manner that I could possibly conceive of or remember; and I would further state and make it briefly, that if I was asked to explain my position, in this case, from first to now, I would have to almost recapitulate the statement made by Mr. Walker, and which were, explained by me some days ago in my testimony; that is what I would consider all the essential points contained in this case in litigation. And I don't consider it necessary for Mr. Walker, or anybody else, to put words in my mouth; as I am simply testifying to the facts in the case, and the truth, in every respect as far as my recollection and knowledge of the case will serve me; and if counsel wants me to explain how I was put into this case, and the whole proceedings up to date, so far as I am concerned, I think I can fully do so, and it would be simply repeating my former testimony, without being a mouth-piece, or anything of that character.

Re-direct examination closed.

Adjourned until Friday, April 3, 1903, at 11 o'clock A. M.

Friday, April 3, 1903, 11 o'clock A. M. Met pursuant to adjournment; counsel present as before.

Re-cross examination waived. And deposition closed.

It is stipulated by counsel for both parties, in view of the fact that the deposition of Mr. Liddell, has been carefully read over by counsel on both sides, and the few errors made by the typewriter-operator, have been corrected

by agreement, so that now the deposition conforms in all respects to the testimony of the witness; that the witness may sign the deposition, without going through the labor of reading it all through himself.

WILLIAM LIDDELL.

Defendant's Exhibit.
Amended Draft of Liddell Affidavit.

UNITED STATES CIRCUIT COURT.

DISTRICT OF MAINE.

EASTERN PAPER BAG COMPANY

vs.

CONTINENTAL PAPER BAG COMPANY.

Affidavit of William Liddell.

WILLIAM LIDDELL, being duly sworn, deposes as follows:

1. My name is William Liddell; my age is sixty; my residence is Brooklyn, New York; and my occupation is that of mechanical engineer and inventor.

2. I am the same William Liddell upon whose supposed invention letters patent of the United States, No. 558,969, were granted April 28, 1896, to the Eastern Paper Bag Company of Connecticut, as my assignee.

3. In the years 1894 and 1895, I was employed by the Eastern Paper Bag Company, to reconstruct a certain

paper bag machine, which had been produced by William B. Purvis in Philadelphia; and which paper bag machine had been made for use in manufacturing paper bags having inwardly inclined longitudinal folds, and inwardly inclined triangular folds and flat rectangular bottoms.

4. The contract, in pursuance of which I reconstructed the Purvis machine in the years 1894 and 1895, also provided that the ownership of whatever inventions I might make, during the time of that contract, in machinery for making that kind of paper bags, should go to the Eastern Paper Bag Company.

5. In the latter part of 1895, I partly planned two separate machines for making such paper bags; which partial planning consisted in thinking, and in making some pencilled sketches, and also some sketches or drawings in ink, to represent my ideas, as far as those ideas had been developed by me.

6. Having thus partly planned those two machines, I was introduced by a representative of the Eastern Paper Bag Company, to Rudolph M. Hunter, a solicitor of patents in Philadelphia, Pennsylvania; for the purpose of having applications made for letters patent of the United States, upon those two machines, respectively. At my first interview with Mr. Hunter, as far as I can remember, he did not give much personal consideration to the subject which I brought to his attention; but sent me to one of his draftsmen, a short distance from his office, with directions to explain my plans to that draftsman, and direct the latter how to make drawings for the proposed applications. Thereupon, I did call upon the draftsman to whom I was sent; but whose name I do not remember, if I ever knew it. That draftsman received all the drawings and sketches which I had made to represent my two plans for paper bag machines (except one slight and unimportant pencilled sketch which I afterward discovered among my papers, and which I will mention again in this affidavit)

and I explained to that draftsman the ideas I had relevant to the two plans for paper bag machines, as far as those plans had been developed in my own mind. Having done these things, I left the draftsman to make Patent Office drawings for the two proposed applications; and I never called upon that draftsman again, or had any communication with him upon the subject.

7. Early in January, 1896, I received in Brooklyn, a request from Mr. Hunter, or Mr. Haverstick, to call upon him in Philadelphia. I therefore went to Philadelphia, on or about January 7, 1896, and called upon Mr. Hunter, and he thereupon informed me that the application papers for patents on my two paper bag machines were ready to be executed by me; but, as far as I can remember, he did not explain those application papers to me, or any drawings connected therewith, so as to show me the character of the specifications or of the drawings. I had at that time, no pecuniary interest in either application, or in any patent that might be granted on either application; and I did not think that any such patent was likely to amount to anything important; and I assumed that Mr. Hunter, on behalf of my assignee, the Eastern Paper Bag Company, had properly prepared the application papers and the drawings in pursuance of the information which I had given to the draftsman. Thereupon, I executed the application papers which Mr. Hunter presented to me, without really understanding them, and without more than a casual glance at the drawings which may have accompanied them, though I do not remember that any drawings were shown to me at that time. That interview with Mr. Hunter lasted only a few minutes; and at its termination, I returned to Brooklyn, and neither heard, saw or knew, anything further or more about either application, or about any papers or drawings connected therewith, until some time in the Spring of 1896, when I happened to see in the *Scientific American*, the statement that

1704

a patent on a paper bag machine had been granted in my name as inventor.

8. That paper bag machine patent which I thus saw noted in the *Scientific American* in the Spring of 1896, as I now remember it, was patent No. 558,969, granted April 28, 1896, to the Eastern Paper Bag Company as my assignee; and I remember the general character and most of the essential details of the drawings and sketches which I delivered and explained to the draftsman in Philadelphia, as set forth in section 6, of this affidavit, and which corresponded nearer than any other to the drawings of that patent.

9. The plan which I had partly worked out for a paper bag machine before going to Mr. Hunter, and which plan corresponded nearer than any other ever produced by me to what is shown in the drawings of the patent, No. 558,969, of April 28, 1896, is represented by a drawing on tracing cloth, which has been made under my direction by Charles D. King, and which is annexed to this affidavit, and is marked "Liddell Drawing, No. 1", and is attested by my signature; and I will now describe that plan of 1895 by reference to that drawing, as follows:

10. The letter C indicates a cylinder to revolve in the direction of the arrow thereon, upon the shaft B. That cylinder was to have two diametrically opposite folding beds, each of which was to be provided with two side folding fingers G, and one front nipper c; which side folding fingers and front nipper are shown on one of the two folding beds in "Liddell Drawing, No. 1" but are not shown on the diametrically opposite folding bed of the cylinder C, of that drawing. The letter L′ indicates a cylinder having half the circumference of the cylinder C, and revolving in the opposite direction over the latter, and intended to co-operate with the cylinder C, in drawing continuous tucked paper tubing into the bite of their peripheries. The letter M^2 indicates a gear having a pitch

diameter identical with the diameter of the cylinder, L′, and the letter M^3 indicates a gear having a pitch diameter identical with the cylinder C; and those two gears were intended to mesh together, and by means of that meshing to cause the cylinder L′ and its shaft L, to revolve exactly twice, while the cylinder C would be revolving once. The letter K′ indicates a cam keyed to the shaft L, so as to revolve with the cylinder L′, and to cause the arms F′ and F, to rock upon the shaft, f, in conformity with the contour of that cam. The letter K, indicates an eccentric gear keyed to the shaft L, and the letters K^2 and M′, indicate those gears, fastened together, turning loose upon shaft f, and meshing harmoniously with the eccentric gear K, and having the same number of teeth, so as to revolve with the same frequency. The letter M′ indicates a circular gear keyed to the shaft f, so as to turn with the eccentric gear K^2. The letters M, M, indicate intermediate gears upon the arm F, between the gear M′ and the gear N, which latter gear has the same diameter as the gear M′ but turns on the shaft e, at the lower end of the arm F. The letter E indicates the forming-plate, the edge W, of which was expected by me to enter the notch in the periphery of the cylinder C immediately below that edge, and to accompany that notch with equal speed as the latter would advance in a clock-wise direction when the cylinder C was rotating. The letter H indicates one of the two side folding fingers which I intended to make operate with the forming plate E, while the letter G indicates one of the two side folding fingers which I intended to operate with the cylinder C, under the forming-plate E; and the letter c, indicates the front nipper which I intended to operate to hold the forward end of the lower ply of a tucked paper tube down upon the folding bed on the periphery of the cylinder C. The letter E′ indicates the front gripper which I intended to use to positively grip the forward

1766

end of the upper ply of the tucked paper tube against the forming plate E.

11. The mode of operation which I expected the machine of Liddell Drawing, No. 1, to have, was as follows :

The cam K′ was to revolve in the direction indicated by the arrow thereon, and was to cause the arm F′, and the arm F, to rock upon the shaft f, in such a way as that the forming-plate E, (as its edge W, would advance with the notch under that edge in the cylinder C,) could rise just enough, to enable the edge W, to accompany the notch on its way around the shaft B, of the cylinder C, until the plate E, would occupy a position in line with the radius of the cylinder C ; and thereupon, to fall just enough and just fast enough, to allow the edge W, of the plate E, to accompany that notch still further. The plate E, was to be caused to turn upon the shaft e, by the gears K, K^2, M′, M, M, and N; and that turning was to be always in an anticlockwise direction, and to consist of a series of continuous revolutions round and round the shaft e. Those revolutions though they were to be continuous, in the same direction, and without any stopping, were to be varied in their speeds during each revolution, by the eccentricity of the gears K and K^2, in the same way in which two eccentric gears are well known in the art of gears to be capable of causing the speed of a part rotated thereby, to vary during each rotation.

12. In order to enable Mr. King to understand my directions how to make Liddell Drawing, No. 1, I furnished him with some pencilled sketches, and also with some pasteboard models to show the relative proportions and forms of the cylinder, C, the cylinder L′, the cam K′, the eccentric gears K and K^2, the arms F′ and F, and the forming-plate E. In making Liddell Drawing, No. 1, Mr. King followed those pasteboard models and sketches, faithfully, and in so doing, he worked out the contour of the cam K′, more perfectly than the contour of the paste-board model

of that cam which I furnished to him, though the alteration in that contour which was made by Mr. King, was but small. I also explained to Mr. King that the two eccentric gears K and K^2 must revolve with equal frequency, and must revolve so as not to cramp each other. The pasteboard models which I furnished to him were not perfect enough to enable this result to be reached, and Mr. King, at my request, worked out the exact contours of those two eccentric gears, so that they would work perfectly together.

13. In making Liddell Drawing, No. 1, Mr. King has not departed at all from my directions, except to perfect the geometrical forms of the cams, gears, and arms which I showed him how to draw, with approximate correctness. Having critically examined Liddell Drawing, No. 1, as it has been completed and lettered by Mr. King, in accordance with the foregoing description thereof, I find that as far as I can remember it now, it accurately and truly represents the plan for a paper bag machine which I took to Mr. Hunter and to Mr. Hunter's draftsman as above set forth; and which was the only foundation I ever furnished either of them for the application papers for letters patent of the United States No. 558,969, of April 28, 1896.

14. The drawings of letters patent, No. 558,969, are so similar in appearance in some respects, to the drawings and sketches which I had furnished to Mr. Hunter's draftsman, and which are represented truly by Liddell Drawing, No. 1, that I never knew until after the Liddell patent, No. 558,969, was granted, that Mr. Hunter's draftsman or Mr. Hunter had departed from my drawings and sketches so wide[illegible]as now appears to have been done in making the drawings of the patent No. 558,969. The differences between my plan which I presented to Mr. Hunter's draftsman, and the plan of the patent, No. 558,969, include the fact that according to my plan, the forming-plate E, was to continuously revolve always in the

1708

same direction around the shaft e; whereas, according to the plan of the patent, No. 558,969, the forming plate E, is to oscillate about its rear edge upon the surface of the cylinder C, from the position shown in figure 3, of those drawings, to the position shown in figure 4, and to a still more forward position, and then to oscillate back again to the position shown in figure 3. That oscillation appears to have been intended to be produced according to the patent, No. 558,969, by means of the cam K, the rod k, the link k^2, and the arm connecting the left hand end of that link with the gear M'. I never planned any such cam, rod, link, or arm, to produce any such oscillation of the plate E, and I never planned any mechanism for producing any such oscillation of that plate, and I never intended or expected or planned to produce any such oscillation at all. Quite otherwise than this, my plan was to make the forming-plate E, revolve continuously in an anti-clockwise direction as shown in Liddell Drawing, No. 1, and to produce that result by means of the eccentric gears K and K^2, and the circular gears M', M, M, and N, of Liddell Drawing, No. 1.

15. It is my opinion, and it always has been my opinion, ever since I first understood the mechanism shown in the patent, No. 558,969, for oscillating the former plate E, that that mechanism is not suitable for that purpose; and that a machine constructed exactly in conformity to the drawings of said patent, No. 558,969, would not work to perform the function of opening out one end of a tucked paper tube, and folding it down into a diamond form, as indicated by the progressive foldings shown in figures 5, 6, 7, and 8, of the drawings of that patent.

Defendant's Exhibit.

AMENDED DRAFT OF LIDDELL AFFIDAVIT.

WM. E. MCREYNOLDS,
Notary Public.

Defendant's Exhibit.
Coburn—Liddell Letter of December 9, 1899.

BOSTON, Dec. 9, '99.
92 High St.

Mr. WILLIAM LIDDELL;
Dear Sir:

Enclosed I hand you my check $250—as called for, by our contract of December 1st date.

All I can say to you now is—keep your eyes and ears open, & find out all you can, that going on, in Bag Machines, & report same to me—I hear rumors of new machines being built & coming out, & I want to get all the information I can regarding them. If you have any applications for work—hear all they have to offer & want, & advise with me.

Yours truly,
CHAS. F. COBURN.

Complainant's Exhibit.
Liddell Contract of November 14, 1901.

FIFTH AVENUE HOTEL,
Madison Square, New York.

NEW YORK, Nov. 14/1901.

In consideration of Fifty dollars to me paid by Chas. F. Coburn of Boston, Mass. the receipt of which hereby acknowledged—the same to be a part payment for the renewal of the contract now existing between us—And if a further sum of 200. is paid to me on Jany. 1 1902, I agree to renew & extend the present existing Contract between us—which expires on Dec. 1/1901. & same to continue in full force & effect for one year longer—viz: during the year 1902—with this exception—that I have the right of

Inventing, or making any improvements, or working on Paper Bag Machines of any kind, for any party, excepting that I agree that whatever Inventions or Improvements made by me—shall not be in any way for the use or benefit of The Continental Paper Bag Co. or of Herman Elsas—or for any Co.—or person in any way connected with them—Nor shall the above named parties be allowed to buy—or lease—or Copy or acquire in any way the use of any Inventions or Improvements made by me—And I agree to help in every way I can said Coburn & Eastern Paper Bag Co. to maintain & defend the validity of all inventions & patents sold them by me—Witness my hand & seal day & year above written—

WM. LIDDELL.
CHAS. F. COBURN.

Defendant's Exhibit.
Coburn-Liddell Letter of November 15, 1901.

BOSTON, Nov. 15/1901.
100 High St.

MR. WM. LIDDELL:

I came home on night train & as agreed to do—herewith send check for the $50.—called for by contract—I looked back and find by my check book that 200 was price paid you for 1901—& as you got more favorable terms for yourself for 1902—price should not have been changed by you—I don't believe I shall want you for much—until after I find out, if Elsas is infringing—If he is—I shall have chance probably to sell out to somebody—Dont you think under the circumstances if I will send you check for $175.—now—in place of the 200 to be sent on Jany 1, that it will be square & more as it should be.?

A bird in the hand, is a sure thing? If I should sell out eve Jany. 1st, you might lose getting the $200.—

Let me know how you feel.—

COBURN.

Complainant's Exhibit.

Coburn-Liddell Letter of November 13, 1902.

CHAS. F. COBURN,
100 High Street.

BOSTON, Nov. 13, /02.

MR. LIDDELL:

I wrote Mr. Betts and enclosed for him to read—your letter to me that you would give all information could &c to help me—

The point in dispute—to prove or for us to substantiate—is—whether you or Claussen first conceived the idea—The lawyers for Continental Co., say—they can and will show by Claussen and men who he disclosed it to—that he conceived and used what you claim—before it granted to you—& that same principle was granted to him in his patents—The thing is—if Claussen can go back with witnesses to ante date your application—can you do likewise?—That is have you any proof, to show that you had the idea in practice or record—before applied for it in Patent office. As I understand my Attys—if the other side put Claussen on the stand—to swear away your priority right—that then—they must place you on in rebuttal—to offset his claim to your invention.

So please have it in mind & see what proof & testimony you can produce—if you & Claussen conflict.

Their lawyers contend—that your claims not clearly defined in your patent—& that Claussen only using what clearly defined & allowed him in his patents—That you never put in practice or use your claim—& that he has his

1712

—& that whilst they similar in some ways—they not in others or as whole—& that each have right to use—as described or granted to each.
Make a search of any records or memo you may have—, & return me enclosed letter—

Yrs.

C.

Complianant's Exhibit.
Coburn Liddell Letter of November 20 1902.

CHAS. F. COBURN,
100 High Street.

BOSTON, Nov. 20/02—

MR. LIDDELL:

I wrote Mr. Betts—that you had found some old sketches & might find more—& that probably you could find some parties with whom you had talked & spoken to about your ideas—before you went to Hunter. I think you told Haverstick & Stearns in general way about it—when you went to work for them—& promised to give them, what you had, & would develop—

You will note that in your letter to me—you refer to the wrong Claussen patent—

Betts writes, the Claussen patent that conflicts with yours is #598,497 of July 95—& not the patent you refer to in your letter—

I enclose you Betts letter—which read and return to me—

Get your thinking cap on—

COBURN.

Defendant's Exhibit.
Liddell-Coburn Letter, Replying to Coburn-Liddell Letter of November 20, 1902.

Mr. COBURN

Dear Sir.

yours of 20th with Mr. Betts letter to you enclosed— I have not seen the Clausun patent of July 95, but would like to see a copy of it— I do not remember at this time speaking or explaining anything about or what they were fore— I generally date drawings or have them witnessed when I think they are of importance, & did not think of any conflict arising in this case—but if I can get any more proof or date in reference to the case I will let you know.

Yours

WM LIDDELL.

Defendant's Exhibit.
Liddell Contract of December 29, 1902.

This contract witnesseth that the Continental Paper Bag Company, a corporation created and existing in due form of law in the state of Maine, and having a place of business in the Borough of Manhattan and City of New York, and William Liddell of the City of Brooklyn, Kings County, in consideration of the payments and promises hereinafter specified, we hereby contract together as follows:

First.—The said Liddell will work for the said Continental Paper Bag Company as mechanical engineer, and make working drawings for paper bag machinery, and superintend the construction of paper bag machinery, during the period of eight months beginning with the first of January, 1903 and ending August 31st, 1903, in the City

of Brooklyn and elsewhere, as the interests of the Continental Paper Bag Company may require, and will devote his entire time, energy, efforts and diligence to do that work during that period, and only do the work of paper bag machinery construction for the said Continental Paper Bag Company; with the exception of the first two months of this contract, which two months the Continental Paper Bag Company agrees to let Mr. Liddell continue his present work, and for him only to devote such time to our paper bag machinery construction as he can find to spare.

Second.—The Continental Paper Bag Company is to pay to the said Liddell for his services during the said eight months as follows:

Fifty dollars ($50) per month during the months of January and February, and Two hundred and eight dollars and thirty-three cents ($208.33) per month, for each and every month beginning with the first day of March until August 31st, 1903, and will repay to the said Liddell his railroad fare and hotel bills to and from any place where he is required to work other than in his home.

Third.—The foregoing propositions of this contract, shall be renewed, at the option of the Continental Paper Bag Company, for one year beginning September 1st, 1903, provided the Continental Paper Bag Company gives notice to the said Liddell on or before July 1st that they will exercise that option by renewing the said provisions of this contract, and making them applicable to the year beginning September 1st, 1903.

Fourth.—The work to be done by the said Liddell during the term of this contract, or if the option is exercised as stated above, for a longer time, shall include whatever he is required by the Continental Paper Bag Company, to

do during that time, towards the construction of paper bag machinery, and towards the improvement of paper bag machinery in the Continental's factories, and such other work of a similar kind which may be assigned to him.

In witness whereof this contract is accepted in duplicate, this twenty-ninth day of December, 1902, by the Continental Paper Bag Company and William Liddell in person.

(signed)

CONTINENTAL PAPER BAG COMPANY
H. ELSAS, Pres.,
WILLIAM LIDDELL.

CHARLES D. KING, a witness produced on behalf of the defendant, having been duly sworn, testifies as follows, in reply to questions put by Mr. Walker.

Q. 1. Are you the same Charles D. King who gave a deposition in this case, last January?

A. I am the same Charles D. King.

Q. 2. That deposition was begun January 12, 1903: and I now wish to take your testimony upon facts which have occurred since that time. To begin with, I inquire when it was, and where it was, and how it was, that you first met William Liddell, the witness whose deposition has just been closed, and who still remains in this room?

A. On January 23, 1903, Mr. Walker brought a man to my office, and introduced him to me, as William Liddell, and told me that Mr. Liddell would explain to me a plan of a paper bag machine, that he had schemed out some years before that; and he left Mr. Liddell in my office. Mr. Liddell commenced to explain his scheme to me, and the next day, I commenced to make a drawing of that scheme, and I arranged with him to come the next night,

that was Saturday night; and he came the next night, Saturday, and gave me more explanations; but as it was getting late, I arranged that he would make some sketches, and I was to go over to his house Sunday evening, and get the sketches.

Q. 3. What time in the day or evening, of January 23, 1903, did you thus meet Mr. Liddell, with Mr. Walker, in your office?

A. It was about five o'clock on January 23, 1903.

Q. 4. About how long did Mr. Liddell remain in your office that evening, engaged in commencing to explain his paper bag scheme to you?

A. Somewhere about one hour and a half, or two hours.

Q. 5. About how long did he remain in your office, on the next night, namely, Saturday evening, January, 24, 1903; giving you more explanations about his paper bag scheme?

A. About an hour I should think; not quite so long as the first night.

Q. 6. Was Mr. Walker present, either on the evening of January 23, or the evening of January 24, after he introduced Mr. Liddell to you, and while Mr. Liddell was making any explanations to you?

A. He was not present after introducing Mr. Liddell on January 23; and he was not present on January 24, 1903.

Q. 7. Did you go to Mr. Liddell's house in Brooklyn, on Sunday evening, January 25, 1903, (as you say you arranged to do on Saturday evening) and if so, state what occurred when you met Mr. Liddell at his house on that Sunday evening?

A. I went to Mr. Liddell's house on Sunday evening, and he told me that he couldn't make the sketches satisfactorily to himself; so he made a number of card-board models, representing the plan which he had invented, and he showed them to me, mounted on a piece of card-board;

then he explained to me how the machine worked, and did this several times; so that I was at his house something like two hours, and I understood his plan quite well.

Q. 8. Who was present at that interview between Mr. Liddell and you on Sunday evening, January 25, 1903?

A. Only Mr. Liddell and myself.

Q. 9. Please to look at the sheet of card-board, and at the seven pieces of cardboard or pasteboard, all of which are already marked, "Defendant's Exhibit, Liddell Model, Wm. E. McReynolds, Notary Public" and state when, if ever, you first saw that sheet of cardboard, and those seven pieces of pasteboard?

A. These are the sheet of cardboard, and the models, which Mr. Liddell showed me on Sunday evening, January 25, 1903, and by means of which he explained his invention, to me.

Q. 10. When, if ever, after that explanation, did you make a drawing in India ink on tracing cloth, to represent Mr. Liddell's invention; as he had explained it to you, by the aid of that sheet of cardboard and those seven pieces of paste-board, which taken together, constitute Defendant's Exhibit, Liddell Model?

A. I commenced the next day, to make a drawing of Mr. Liddell's scheme with the aid of the model, which Mr. Liddell furnished me; and I think I worked all that day and the next upon the drawing. When it was completed, I handed it to Mr. Walker, together with the cardboard model, which Mr. Liddell had given me.

Q. 11. When, if ever, did Mr. Walker, or Mr. Liddell, bring that drawing back to your office, after you had delivered it to Mr. Walker?

A. A few days after, I think it might have been Thursday evening, January 29, 1903, Mr. Walker came over to my office, with Mr. Liddell, bringing the drawing, and told me that two slight changes in the way of additional mem-

bers, were required; and I then made the additions that Mr. Liddell said were necessary. They were to show two rivets, connecting one of the eccentric gears to a true gear, that ran with it; and to show a key connecting the longer arm of the model, to the shaft on which that arm rocked.

Q. 12. When, if ever afterwards, did Mr. Walker bring that drawing back to you, with Mr. Liddell's name signed thereon, and employ you to make a tracing of the drawing, thus signed by him?

A. It was a few days afterwards; but I can't tell the exact date.

Q. 13. Did you make a complete and correct tracing of that drawing, and trace also, Mr. Liddell's signature, on the tracing, so that it would be a duplicate of the drawing you first made?

A. I made such a duplicate, and traced Mr. Liddell's signature on it, from the other tracing; and also I wrote in my own handwriting, in parenthesis, the word "signed" next to the tracing of Mr. Liddell's signature.

Q. 14. I now show you a tracing on tracing cloth, which is now marked "Liddell Drawing No. 1" (signed) "William Liddell" and is also now marked, "Wm. E. McReynolds, Notary Public" and I ask you who made this tracing I now show you, and I ask you to state what it is?

A. I made this tracing, which I now hold; and it is the duplicate of the first tracing I made of Mr. Liddell's scheme.

Q. 15. Is this the duplicate which is referred to in your answer to Q. 13?

A. Yes, it is the same duplicate.

Q. 16. I now show you another tracing, and I ask you who made it, and what it was made for?

A. I made this tracing, and made it for the purpose of showing the paths that the point W, of the plate E, in

Liddell Drawing, No. 1, would take, during one revolution of the shaft L.

Q. 17. Who worked out the courses of the paths (shown in this tracing) which the edge W, would take during one revolution of the shaft L?

A. They were worked out by myself.

Q. 18. In what way did you work out those paths; that is to say, did you work them out mathematically on paper; or did you work them out by making a model, and ascertaining from that model, exactly what circuit the edge W of the plate E would take during one revolution of the shaft L?

A. I worked them out mathematically on paper, without a model.

Mr. Walker offers in evidence the tracing last identified by the witness, and requests that it be marked, "Defendant's Drawing, No. 14, Wm. E. McReynolds, Notary Public" and it is accordingly so marked.

Q. 19. Please to assume a model built like Liddell Drawing, No. 1, (and therefore like Defendant's Drawing, No. 14,) with the cylinder C, beyond the forming-plate E, so that the forming-plate could revolve on its axis e, without interfering with the cylinder C; and on that assumption, state where the edge W, of the forming-plate E, would be, when the notch in the cylinder C, (which is under that edge, in Defendant's Drawing, No. 14) would reach the position indicated by the numeral 2, which you placed near the border of the cylinder C?

A. The edge W, would be at the point 2, of the line marked X.

Q. 20. When the notch in the cylinder would reach the location of the numeral 3, near the border of the cylinder, where would the edge W, of the plate E, have reached?

A. The edge W, of the plate E, would have reached the numeral 3, on the line X.

Q. 21. When the notch in the cylinder would reach the location of the numeral 4, near the border of the cylinder; where would the edge W, of the plate E, have reached?

A. The edge W, would have reached the point 4, on the line X.

Q. 22. When the notch in the cylinder would reach the location of the numeral 5, near the border of the cylinder; where would the edge W, of the plate E, have reached?

A. The edge W, would have reached the point 5 of the line X.

Q. 23. When the notch in the cylinder had reached the points indicated by the numerals 6, 7, and 8, respectively; near the border of the cylinder; where would the edge W, be respectively located?

A. The edge W, would be at the points 6, 7, and 8, of the line X, respectively.

Q. 24. Please now to look at the model I show you, marked "Defendant's Exhibit, Model of Liddell Drawing, No. 1, Wm. E. McReynolds, Notary Public" and state what that model is?

A. This model is a model developed from Defendant's Drawing, No. 14; but with the omission of the cylinder C.

Q. 25. Have you compared the cam K′, of Defendant's Drawing, No. 14, with the cam of the model; and have you compared the gears M^2, K, K^2, M′ M, M, and N, of the Defendant's Drawing, No. 14, with the gears of the model; and have you compared the arms F and F′, of Defendant's Drawing, No. 14, with the arms of the model; and have you compared the forming-plate E, of Defendant's Drawing, No. 14, with the bar which occupies a corresponding position in the model; and have you made these comparisons for the purpose of ascertaining the conformity, or otherwise, of the model with Defendant's Drawing, No. 14, and if so, what was the result of your comparison?

A. I have made all those comparisons; and find that

the parts of the model agree with the parts of the drawing.

Q. 26. Was the model first seen by you after you had completed Defendant's Drawing, No. 14; or had you seen the model when you made that drawing?

A. I had not seen the model when I made that drawing. The model was made after the drawing was made.

Q. 27. Now, when the model was made; and moved, by turning its shaft L, so as to carry the roller which is in contact with the cam K′ from the position shown in Defendant's Drawing, No. 14, as far as to the point of the horn of the cam K′; how did the path, taken by the end of the arm (or rather by the bit of pencil-lead, which is held by the arm near its end) compare with the path X, of the edge W, of the plate E, of Defendant's Drawing, No. 14, from the position indicated by the numeral 1, to the position indicated by the numeral 8 in that path?

A. The conformity was exact.

Q. 28. Now, I call your attention to the fact that in Defendant's Drawing, No. 14, the edge W of the plate E, after reaching the point in the path X, which is indicated by the numeral 8, appears to move backward to the point indicated by the numeral 9, and then to the point indicated by the numeral 10, and then to the point indicated by the numeral 11; and thereupon, to move forward again to the point indicated by the numeral 12, and still further forward, to the point indicated by the numeral 13, and still further forward to the point indicated by the numeral 14; and I ask you whether the model in its movement, verified the exact correctness of the movement of the edge W, from the point indicated by the numeral 8, in the path X, to the point indicated by the numeral 14, in the path Y, of Defendant's Drawing, No. 14, on the one hand; or whether on the other hand, the model developed some inaccuracy in the location of the points 9, 10, 11, 12, 13, and 14, of the paths X and Y, of Defendant's Drawing, No. 14?

A. It developed a small inaccuracy.

Q. 29. Please to produce, if you can, a drawing to represent the exact positions of the points indicated by the numerals, 8 to 14, inclusive, of the paths X and Y, of Defendant's Drawing, No. 14, as those points must be located in order to make them conform exactly to correctness?

A. I here produce such a drawing.

Mr. Walker offers in evidence the drawing produced by the witness, and requests that it be marked "Defendant's Drawing, No. 15" and it is accordingly so marked.

Q. 30. Did you work out the corrected positions 8 to 14 inclusive, in Defendant's Drawing No. 15, mathematically, after you had observed the movement of the pencil near the end of the arm of the model, during that part of the course taken by that pencil; and if so, did you discover what mathematical error or errors you had made in working out the positions 8 to 14, inclusive in the paths X and Y, of Liddell Drawing, No. 14?

A. I worked out these points mathematically, after I saw the model, and discovered wherein I made the slight discrepancy, in fixing the points 8 to 14, in the paths X and Y, of Defendant's Drawing, No. 14.

Q. 31. Now, I call your attention to the path Y of the edge W of the plate E, in Defendant's Drawing, No. 14, between the point indicated by the numeral 14, in that path, around to the starting point of the edge W, indicated by the numeral 1, in that drawing; and I ask you to state how that long sweeping circuit of the path Y, of Defendant's Drawing, No. 14, conforms or does not conform, as the case may be, to the path taken by the pencil near the end of the arm, of Defendant's Exhibit, Model of Liddell Drawing, No. 1, while that pencil point is passing upward and around the shaft e, to the place of beginning, at the point indicated by the numeral 1?

A. It conforms very accurately, except that the latter

portion just above the letter E, where the curve is a little more acute as formed by the model, than as shown in Defendant's Drawing, No. 14.

Q. 32. What is represented on Defendant's Exhibit, Model of Liddell Drawing, No. 1, by the gimlet hole, which is bored through the board upon which the moving parts of that model are mounted?

A. That represents the position of the center of the shaft B, of Defendant's Drawing, No. 14; and also of Liddell Drawing, No. 1.

Q. 33. What is represented by the black circle drawn around that gimlet hole, on that board, and which circle is nine inches in diameter?

A. It represents the periphery of the cylinder C, of Liddell Drawing, No. 1, and of Defendant's Drawing, No. 14.

Q. 34. Now, I observe that the pasteboard parts of Defendant's Exhibit, Liddell Model, while conforming in general to the corresponding parts in Liddell Drawing, No. 1, are out of conformity to those parts in respect of the perimeters of the eccentric gears K and K^2, of Liddell Drawing, No. 1; those perimeters having the same extent in that drawing, whereas the two pasteboard pieces which Mr. Liddell made to represent those eccentric gears, are not exactly identical in size or extent of their perimeters. Please to explain why you departed from Defendant's Exhibit, Liddell Model, in that respect, when you made Liddell Drawing, No. 1?

A. I made the perimeters of the eccentric gears equal; because in order to have two eccentric gears run together without binding, at any point, they must have equal perimeters.

Q. 35. In laying out and making Liddell Drawing, No. 1, did you exercise all your skill as a draftsman, to make that drawing mechanically as correct as possible; without departing from Mr. Liddell's scheme, as he explained it to

you, by the aid of Defendant's Exhibit, Liddell Model; and without adding any invention of your own, to what Mr. Liddell explained to you?

A. I exercised the skill to make it mechanically correct, according to his scheme; and I did not add any invention of my own.

Q. 36. I observe that Liddell Drawing, No. 1, shows a pivoted gripping finger E′, to work with the forming-plate, E. Now please to state who told you to put that pivoted finger E′ into the Liddell Drawing, No. 1?

A. Mr. Liddell told me to.

Q. 37. Did he tell you to make that finger a pivoted one, so that it would grip positively against the surface of the plate E, or did he simply tell you to put some kind of a finger there, without telling you whether it was to be a pivoted finger or was to be a fixed finger?

A. He told me to make it exactly as it is shown in Liddell Drawing, No. 1; and I had a sketch of his, to work from on that point.

Q. 38. How did you find out how to draw in the side finger G, and the short shaft, upon the upper end of which that finger is mounted, and the spiral spring, which surrounds that shaft in Liddell Drawing, No. 1?

A. From Mr. Liddell's description, and from the sketch he made.

Q. 39. How did you find out how to draw in the front gripper c, which appears in Liddell Drawing, No. 1, as adapted to hold the forward end of the lower ply of a tucked paper tube, down upon the cylinder C?

A. I determined this, also, by a sketch of Mr. Liddell's and his description.

Q. 40. I observe that the parts of the Defendant's Exhibit Liddell Model, while they include pieces corresponding to the cam K′, the roller or cylinder L′, the arms F and F′, the eccentric gears, K and K², and the true gear N, carrying the plate E; do not include any separate piece repre-

senting the true gear M′, or the upper gear M or the lower gear M; and I ask you to state how you found out the way to represent those three true gears, M′, M, and N, in Liddell Drawing, No. 1?

A. Mr. Liddell explained to me about the true gears, M′, M, and M, and indicated in pencilled lines, on the arm F, their location, and relative size.

Q. 41. I observe that the cam K′, in Liddell Drawing, No. 1, is an uncommonly close copy of the pasteboard which represents that cam in Defendant's Exhibit, Liddell Model. And I ask you to state, whether that pasteboard piece has exactly the same outline now, that it had when Mr. Liddell gave it to you, on the one hand; or whether it was changed and improved in outline after you first saw it?

A. To the best of my belief, it is the same now, that it was when I first received it from Mr. Liddell.

Q. 42. Now, in your conferences with Mr. Liddell, in pursuance of which you made Liddell Drawing, No. 1; did he seem to know pretty accurately, what he wanted you to do, in respect of making that drawing, and in respect of its details, on the one hand; or on the other hand, what impression did he make upon your mind, on that subject?

Objected to as leading.

A. He seemed to know just exactly what he wanted to have me do; and I didn't have to offer any suggestions or anything at all, or anything of that nature, during the conferences.

Q. 43. It is well known, is it not, among machinists that two eccentric gears, in order to mesh together without binding, must have the same perimeters, and the same number of teeth?

Question objected to as leading.

A. Yes, that is a fact, and is well known.

Q. 44. When Mr. Liddell presented to you the two

pieces of pasteboard to represent his two eccentric gears; did you happen to notice that those two pieces of pasteboard were not exactly identical in extent of their perimeters?

Objected to as leading.

A. I did notice it, and I called Mr. Liddell's attention to it.

Q. 45. What did he tell you to do about it?

A. He told me to change them so that they would mesh accurately.

Q. 46. It turned out, did it not, that when you first saw Defendant's Exhibit, Model of Liddell Drawing, No. 1, you found that you had laid out the two eccentric gears K and K^2 of Liddell Drawing, No. 1, in such a way that they would mesh together correctly, without binding?

A. I found that I had laid them out correctly, so that they would mesh together without binding.

Q. 47. Now, Mr. King, did you ever know or hear of any such combination of parts as that shown in Liddell Drawing, No. 1, prior to the time that Mr. Liddell began explaining his paper bag machine scheme to you, on the evening of Friday, January 23, 1903?

A. I did not know of any such combination of parts prior to that time.

Q. 48. Did Mr. Walker, or did anybody else, except Mr. Liddell, contribute anything to your production of Liddell Drawing, No. 1; and if so, who made any such contribution?

A. No one contributed to it, except Mr. Liddell.

Q. 49. What, if anything, did you do toward making Liddell Drawing, No. 1, except to use your hands, and your drafting instruments, to make a drawing, in accordance with the explanations or directions which Mr. Liddell gave to you?

A. I simply used my skill as a draftsman, and my instruments, to follow out his ideas.

Q. 50. I observe a notch in the periphery of the cylinder C, of Liddell Drawing, No. 1, diametrically opposite to the notch under the edge W of the plate E of that drawing; and I observe also that the gear M^2 of that drawing, appears to be one-half the diameter of the gear M^3; and I infer that the gear M^2 is therefore to revolve twice, while the gear M^3 is revolving once; and I ask you if I am right in my observation and inference?

A. That is right. The gear M^2 revolves twice while the gear M^3 revolves once.

Q. 51. How many times will the shaft L, and the cam K', revolve while the cylinder C, is revolving once?

A. They will revolve twice, while the cylinder C, is revolving once.

Q. 52. It would seem, from the fact you last state, that it was Mr. Liddell's design, to have two folding-beds on the cylinder C, one of them being where the finger G, and the front gripper c, are located; and the other one diametrically opposite thereto; but there is no such duplicate apparatus shown on the diametrically opposite side of the cylinder C, in Liddell Drawing, No. 1. Please to explain this matter, and state the facts about it?

A. Mr. Liddell explained to me that he desired to have two folding-beds, on the cylinder C, and that in a finished machine, there would be duplicate grippers G, and c; but to save time, we left out the second set of grippers, in the drawing.

Q. 53. Have you given any mathematical, theoretical, consideration to the question whether it would be possible to so change the forms and proportions of some or all of the parts shown in Liddell Drawing, No. 1, as to cause the edge W, of the plate E, to accompany the notch in the cylinder C (which is shown under that edge in Liddell Drawing, No. 1) at the same speed with the forward movement of that notch, as the cylinder would be revolving in

the direction of the arrow shown thereon, in Liddell Drawing, No. 1?

A. I have given some consideration to that question.

Q. 54. Has that consideration been complete enough to carry your own mind, to a conclusion, on that question?

A. It has.

Q. 55. Please to state that conclusion; without at this moment, stating the reason upon which it is based?

A. It would not be done, with these elements as shown in the drawing?

Q. 56. Could the edge W be made to accompany the notch in the cylinder under that edge, with these elements shown in Liddell Drawing, No. 1, if those elements were to be changed in form or proportion, without being changed in number or arrangement?

A. I do not think it could.

Q. 57. What characteristic belongs essentially, to the mechanism shown in Liddell Drawing, No. 1, which must make it impossible, for that mechanism, by any change of form or proportion, to cause the edge W, of the forming-plate E, to accompany the notch in the cylinder under that edge, during the forward movement of that notch, around the shaft B?

Objected to as leading.

A. At the time that the roll of the arm F', is at the highest part, of the cam K', the shaft e is at its highest position, and at this time the gears, M, M, and N, are caused to reverse their movement from those directions indicated by the arrows upon them, so to make the edge W still move ahead, you would have to reverse the direction of the machine, and all its parts; and that could not be done with the elements that are shown in Liddell Drawing, No. 1.

Q. 58. Suppose parts should be added to the mechanism shown in Liddell Drawing, No. 1, for reversing the di-

rection of revolution of the machine, at the instant the shaft e, reaches its highest position, in order to make the plate E continue to turn forward ; what effect would that forward turning of the plate E, in connection with the reversal and backward turning of the cylinder C, have upon the paper bag blank that would be gripped at its lower ply, by the grippers G and c, to the cylinder, while being gripped at its upper ply, by the grippers H and E', to the forming-plate ?

Objected to as hypothetical and without foundation.

A. It would tear the blank in two pieces.

Q. 59. Is it possible to so proportion the parts shown in Liddell Drawing, No. 1, and also shown in Defendant's Drawing, No. 14, as that the edge W, will continue to revolve around the shaft e, without making any such backward movement, as is indicated by the line extending from the numeral 8, to the numeral 11, in the path of the edge W, which is shown in Defendant's Drawing, No. 14, as connecting the path X and the path Y, of that drawing; or as is more exactly indicated in Defendant's Drawing, No. 15, by the line which connects the angle indicated by the numeral 8, to the angle which is indicated by the numerals 11 and 12 ; while the cylinder C, continues to revolve in the direction of the arrow on that cylinder.

Objected to as without sufficient foundation.

A. I do not believe it is possible to make any change in proportions of the parts, so as to accomplish this result.

Q. 60. Would it be possible, by largely increasing the eccentricity of the eccentric gears K and K^2, to cause the edge W, of the plate E, to accompany the notch in the cylinder under that edge, even as far as to a position directly between the center of the shaft e, and the center of the shaft B ?

Objected to as without sufficient foundation.

A. I do not think that that could be done, even that way.

Q. 61. Please to look again at Liddell Drawing, No. 1, and at Defendant's Drawing, No. 14, and state whether Defendant's Drawing, No. 14, was produced by first tracing its parts from Liddell Drawing, No. 1, and was completed by simply adding the paths X and Y, and the short reverse path, which connects them, (between the angles indicated by the numeral 11, respectively) and was finished by adding the numerals 1 to 14, inclusive, at different positions in those paths, and by adding the numerals 1 to 14 inclusive, at different positions, on the periphery of the cylinder C; or if Defendant's Drawing, No. 14, was made by you, in some other way, please to state by what process it was made?

A. It was made by the process described in the first part of the question.

Q. 62. What do you say of the simplicity or the complexity, as the case may be, of the mathematical processes, by means of which, you worked theoretically out, the paths of the circuit of the edge W, of the plate E, of Liddell Drawing, No. 1, as those paths are delineated in Defendant's Drawing, No. 14?

A. The process was very intricate and complex.

Q. 63. About how long a time were you engaged in working out those paths by that process?

A. As near as I can remember, about two days.

Q. 64. About when did you do that work relatively to January 29, 1903, when you completed Liddell Drawing, No. 1, by adding the key between the arm F and the shaft f, and by adding the two rivets to connect the true gear M', and the eccentric gear K^2?

A. Some time afterwards. Well, probably a week or two weeks.

Q. 65. During your conferences with Mr. Liddell, while he was explaining to you how to make Liddell Drawing,

No. 1, what did he tell you relative to any cams for moving the grippers G, H, E′ and c, shown in that drawing?

A. He told me that they were to be placed two on each side of the cylinder, two to work the grippers G, two to work the grippers H; and he planned them to be stationary, attached to some part of the frame. The gripper c, was to be worked by a shaft that extended crosswise of the cylinder C, and by an apparatus similar to what is shown in the Liddell patent, No. 558,969; and the gripper E′ was worked by a shaft extending across the lower face of the plate E, and having an arm attached that works on the stationary cam.

Q. 66. How did it happen that you did not represent on Liddell Drawing, No. 1, the cams by which Mr. Liddell had planned to move the grippers G, H, E′ and c?

A. I thought it would tend to confuse the drawing; and there really wasn't time to do that.

Q. 67. What is indicated by the arrow, on the cylinder C, of Liddell Drawing, No. 1?

A. It indicates the direction in which the cylinder C turns on its axis.

Q. 68. What device in Liddell Drawing, No. 1, shows the direction in which the shaft L, with the gear M^2, the gear K, and the cam K′, are to revolve?

A. The arrow directly above the letter L, shows the direction of the turning.

Q. 69. According to the mechanism of Liddell Drawing, No. 1, do the gears M′ and K^2 always turn in the direction of the arrows on those gears; or do those gears sometimes stop, or sometimes turn in the opposite direction?

A. The gears M′ and K^2 always turn in the direction indicated by the arrows placed upon them.

Q. 70. Do the gears M, M, and N, always turn in the directions indicated by the arrows on those gears, on the one hand; or on the other hand, do those gears reverse

their direction of turning, when the arm F, stops rising and begins to fall?

A. They have a reverse action when the arm F begins to fall.

Q. 71. And am I right in understanding that that reverse action must always be fatal to the operativeness of the mechanism shown in Liddell Drawing, No. 1; even if that mechanism could be so changed in the proportions or forms of its parts, as to abolish its other defects?

Objected to as leading.

A. I think it would always be fatal to its operativeness.

Direct examination closed.

Adjourned until Monday, April 13, 1903, at 11 o'clock in the forenoon.

Monday, April 13, 1903, at 11 o'clock in the forenoon; adjourned by agreement until Wednesday, April 22, 1903, at 11 o'clock in the forenoon.

Wednesday, April 22, 1903, 11 o'clock A. M. Met pursuant to adjournment; counsel present as before.

Cross examination by Mr. S. R. Betts:

X-Q. 72. What is your profession?

A. I am a mechanical draftsman.

X-Q. 73. State in general, to what extent you have done work for Mr. Walker, defendant's counsel, and for how long?

A. I have made exhibits for him in this suit, and in other suits, and have been employed by him for about a year.

X-Q. 74. You have been paid, or expect to be paid, for the time you devote to making drawings, and testifying in this case, as a witness for the defendant, is that not so?

A. I have.

X-Q. 75. Referring to the interview between you and

Mr. Liddell on January 23, 1903, did you make any notes of the explanations Mr. Liddell gave you at that time?

A. Very few, and I preserved none of them.

X-Q. 76. When did you destroy those notes?

A. Why, I did not make any elaborate description in them. They were simply in the shape of rough sketches, and I think I destroyed them within a day or two after I was through using them. They were not anything that would have been of any further use, or I would have preserved them.

X-Q. 77. Did Mr. Liddell make his first explanations to you orally?

A. He made some of them orally, and some rough sketches, to illustrate the various details; but he did not write out anything beside his sketches.

X-Q. 78. Did Mr. Liddell ever show you any other set of cardboard models, than those comprising Defendant's Exhibit, Liddell Model?

A. He did not.

X-Q. 79. Did you submit the drawing of Mr. Liddell's scheme to either Mr. Walker, or Mr. Liddell before it was inked in?

A. No, I don't think that either one of them saw it, until I had partly finished inking it in.

X-Q. 80. What do you mean by "partly finished inking". How much was done?

A. Well, I think it was more than half done.

X-Q. 81. Was any suggestion made as to changing the drawing then submitted in this partly finished state?

A. Not that I recollect.

X-Q. 82. How did you happen to submit the drawing to Mr. Walker and Mr. Liddell before it was finished?

A. I did not submit it to them. Mr. Walker came over to my office, to ask me to be sure and have it finished by the evening of that day that he came over, and of course he saw the drawing, in its unfinished condition.

Mr. Liddell did not see the drawing until it was completed.

X-Q. 83. Did you make the model, Defendant's Exhibit, Model of Liddell Drawing, No. 1?

A. No, sir, I did not make that model.

X-Q. 84. Do you know who did make it?

A. I was informed that the Knickerbocker Machine Works made the model.

X-Q. 85. Do you know whether your drawing or tracing was furnished to the model-makers, to make that model from?

A. A blue print of the tracing was furnished them.

X-Q. 86. Did you criticise this model, Defendant's Exhibit, Model of Liddell Drawing, No. 1, while it was being made?

A. No, sir, not while it was being made.

X-Q. 87. Did you criticize it after it was finished?

A. Yes.

X-Q. 88. What did you say about it?

A. I think that my decision was that it was sufficiently near to the blue print, in its dimensions, to suit our purpose. That's all.

X-Q. 89. What difference did you detect between the model and the blue print, which latter embodied Defendant's Exhibit, Liddel Drawing, No. 1.

A. I detected no material differences. It was as near as it was practical to make such a model.

X-Q. 90. Well what differences did you detect?

A. I don't recall to mind any particular differences that I detected.

X-Q. 91. In order that you might make Liddell Drawing, No. 1, did Mr. Liddell furnish you with any sketches or memoranda which he stated or claimed were old, or made at the time of his first getting up this idea?

A. He furnished me no such sketches.

X-Q. 92. Did you derive any knowledge or impression

from him as to whether the idea which he was submitting to you so that you could make your drawing, was an old idea with him, or one he had lately thought out?

A. My impression was that it was an old idea. He seemed to me perfectly familiar with the scheme, and there was no hesitation on his part, as though he was trying to think out some parts that had not occurred to him before, that is to devise anything new.

X-Q. 93. He seemed to have the mechanism fully and completely in mind, did he?

A. Yes, sir.

X-Q. 94. Did he say anything to you as to whether he considered it an operative mechanism?

A. He did not say anything about this particular drawing, or the models that he furnished me; but in talking about the invention as he submitted it to Mr. Hunter, he did not seem to think it a remarkably good machine.

X-Q. 95. With reference to the details shown on this Liddell Drawing, No. 1, did Mr. Liddell have any difficulty or hesitancy in setting forth to you, at your first interview, the exact details of the mechanism, as shown in the drawing?

A. No, sir, he had no hesitancy; but sketched them out quite readily, as if he was familiar with those details.

X-Q. 96. When you had finished Liddell Drawing, No. 1, and before you made the further investigations which are shown in Defendant's Drawing, No. 14, did you consider Liddell Drawing, No. 1, to represent an operative structure, or not?

A. I think I did believe then that it was operative.

X-Q. 97. When did you reach any contrary conclusion, if you ever did; and decide that it would be inoperative?

A. I went to work investigating, a few days after I completed Liddell Drawing, No. 1, and I saw then that it would be inoperative.

X-Q. 98. How far did you have to carry your investiga-

tion, before reaching the conclusion as to its being inoperative?

A. I drew out all of the parts including the cam, and everything except the elliptic gears, or eccentric gears. When I started to plot those out, I saw that it was a geometrical impossibility to make a pair of eccentric gears for this particular combination of elements, to make it operative.

X-Q. 99. Then, if Mr. Liddell has testified that the construction shown in Liddell Drawing, No. 1, is an operative structure, you are willing to testify that he is mistaken in that statement, are you?

A. Yes, sir, he is certainly mistaken.

X-Q. 100. What, in your observation, opinion and judgment, is the smallest change that can be made in the structure of Liddell Drawing, No. 1, and the model representing it, to make that structure operative, in the sense that the revolving cylinder and forming plate shall revolve in operative relation?

A. I have not given that question sufficient consideration to answer your particular point. It would require some little invention to accomplish this.

X-Q. 101. Do you think that the structure of Liddell Drawing, No. 1, could be made operative; and more particularly in respect to relations of revolving cylinder and forming plate; by making changes, which however should not introduce any new elements into the combination?

A. I do not think it could be accomplished without introducing new elements into the combination.

X-Q. 102. Well, what would you designate as some new element or elements, which you think would have to be introduced to make that structure operative?

A. I haven't given consideration enough to tell just exactly what new elements would be required.

X-Q. 103. Suppose the form of cam were changed, and the proportions of the gearing were changed (such changes

not being considered new elements) might that be sufficient to make the structure operative?

A. No, sir.

X-Q. 104. Your idea is that something not now in the structure, would have to be introduced to make it operative? How is that?

A. Yes, something new would have to be introduced to make it operate, if it ever could be made to operate.

X-Q. 105. But you cannot make any suggestion as to what this new thing should be or must be, can you?

A. Not without spending considerable time; several days, perhaps, to ascertain this.

X-Q. 106. What has been your experience in connection with paper bag machinery?

A. It has all been in connection with this case. I made all the drawings, I believe, or most of the drawings that have been offered by Mr. Walker, as exhibits; and I have examined a considerable number of patents, and a machine in the Walker Model-Room, all in connection with this case.

X-Q. 107. You have had no experience in designing paper bag machinery, have you?

A. No, sir.

X-Q. 108. Nor, with actual operative paper bag machines, have you?

A. Why, only with the machine in the Walker Model-Room, which is the Walker Model-Room Machine.

X-Q. 109. And that simply consisted in seeing it turned, did it not?

A. It consisted in seeing it operate, and in minutely examining many of the parts, and how they operated.

X-Q. 110. What mathematical education have you had?

A. Oh, I have studied arithmetic, algebra, and geometry, and descriptive geometry; and kinematics, as regards a large number of machines, and complicated structures.

X-Q. 111. Have you ever taken any mathematical degree. Where have you studied these various subjects?

A. I have not taken any degree of any college. I studied the first three of these branches in the schools in the town where I was brought up, Chickopee, Massachusetts; and I have studied various books on mathematical subjects, from time to time, during the past thirteen years, in connection with my work, as well as studying a great many machines.

X-Q. 112. Have you preserved any of the notes or figures indicating the intricate and complex processes by which you reached what is delineated in Defendant's Drawing, No. 14?

A. Yes, sir, I have preserved them.

X-Q. 113. Will you produce them for my inspection?

A. I now produce five pieces of paper, the larger one of which is made in pencil on a sheet of cardboard, and which I now mark with the letter A; and the next in size, being on tracing paper which I now mark with the letter B; and the next in size being also on tracing paper, which I now mark with the letter C; and the other two being on smaller pieces of tracing paper, which I now mark with the the letters D and E respectively. These are all the papers I made, in working out the path of the edge W, of the plate E, in making Defendant's Drawing, No. 14.

Complainant's counsel requests the examiner to mark for identification the five pieces of paper produced and just above referred, and they are accordingly marked, "King Calculations, A, B, C, D, E, for identification on part of complainant."

X-Q. 114. State as briefly as possible the process involved in working out theoretically, the paths of the circle of the edge W, of the plate E, of Liddell Drawing, No. 1, as those paths are delineated in Defendant's Draw-

ing, No. 14. Please refer to the papers A, B, C, D & E, in this connection?

A. In working out the path X, of Defendant's Drawing, No. 14, the process can be exemplified by stating how I worked out one point, and other points in the path were worked out, in a similar manner, so that I will take the point 2, in the path X. I used the tracing marked C, which represents the arms F' and F, and found where the center of the shaft e would be located, after the cam K' had moved a distance in the direction of the arrow thereon, of a tooth and a space. This position of the center of the shaft e is marked 2. Then I first marked the position upon a circle in pencil lines, of the edge of the plate, E; and then also on the circle, I marked off the distance that the plate E would be rotated around the center of the shaft e, on a circle, due to a rotation of the eccentric gears through the distance of a tooth and a space of the gear M^2. Drawing a line through this point, on the pencilled circle, and spacing off the distance equal from center e, to edge W, gave the position that the edge W, would move due to the action of the eccentric gears. Now, I found the amount that this plate E, would move, due to the rack action, of the upper gear M, moving in connection with the gear M', from the starting point to the position of the center e, marked 2. This I added on to the position described as due to the motion from the eccentric gear. This is the final position of the point 2. The points 3, 4, etc., were worked out with similar processes, and after they were all worked out, I connected in the irregular curve X, and other portions of the path, by means of a curved ruler.

Deposition closed.

CHARLES D. KING.

UNITED STATES CIRCUIT COURT,

DISTRICT OF MAINE.

EASTERN PAPER BAG COMPANY,

vs.

CONTINENTAL PAPER BAG COMPANY.

Evidence taken on behalf of the defendant, at the office of Albert H. Walker, Floor 25, Park Row Building, Manhattan, New York, beginning Monday, May 4, 1903, at 11 o'clock in the forenoon, and continuing thereafter from time to time, by adjournment; the said evidence being taken before Frederick C. Hunter, a Notary Public, having authority to act as such, in Manhattan, New York; and being taken down by Grace Smith, a typewriter operator; and being thus taken before Frederick C. Hunter, by Grace Smith, in pursuance of a stipulation of the parties, which is prefixed to the complainant's evidence, and which was made March 6, 1902.

Present: Frederick C. Hunter, the Notary Public; and Samuel R. Betts, counsel for the complainant; and Albert H. Walker, counsel for the defendant.

WILBUR M. STONE, a witness produced on behalf of the defendant, being duly sworn by the Notary Public, deposes as follows, the direct questions being put by Mr. Walker.

Q. 1. Are you the same Wilbur M. Stone who gave a deposition in this case, in January, 1903?

A. I am.

Q. 2. I now show you Liddell Drawing, No. 1, which was proved and put in evidence in this case, on March 16, 1903, as appears on page 543, of the defendant's record; and I also show you Defendant's Exhibit, Model of Liddell Drawing, No. 1, which was proved and put in evidence in this case on the same day, as appears on page 544, of the defendant's record; and I also show you Defendant's Exhibit, Amended Draft of Liddell Affidavit, which was put in evidence in this case, on the next day, as appears on page 573, of the defendant's record; and I ask you to state whether you have heretofore examined that drawing, that model, and that affidavit, and if so, whether you understand them?

A. I have examined carefully the Liddell Drawing, No. 1; the Model of the Liddell Drawing, No. 1; and the Defendant's Exhibit, Amended Draft of Liddell Affidavit; and I believe I fully understand them.

Q. 3. State what relation exists between that drawing and that model?

A. The model corresponds in all particulars to the said Liddell Drawing, No. 1, except that the cylinder C, of the drawing, is represented in the model, by a pencilled circle, about nine inches in diameter, and the center of which is represented by a drilled hole in the back-board which supports the metallic parts of the model, and on which back-board said pencilled circle is drawn. Also, the gear M^3 of the drawing, is not shown in the model. The fingers G, and c, of the cylinder C, of the drawing, do not appear in the model; and the fingers H and E', of the former plate E, do not show in the model. Also, the forming-plate E, of the drawing, is represented by a bar in the model, and the edge W, is represented by a piece of pencil lead; and the cylinder L', is not shown in the model. I have carefully compared the gear M^2, the cam K', the gears K, K^2, M', M, M, and N, and the arms F and F', of the model,

with the corresponding parts of the drawing, and find that they are accurate copies thereof. The model has a crank on the shaft L, for turning said shaft, and the gears M′, and K, and the cam K′, thereon. When the crank is turned one revolution, so as to revolve the shaft L, once in the direction of the arrow above it, in the drawing, it will cause the pencil point representing the edge W, to move in space around the shaft E, one turn, through the same path that the edge W, of the plate E, of the Liddell Drawing, No. 1, would move in a structure built in accordance therewith, except that the edge W, of the plate E, must be out of the plane of the cylinder C, so as not to interfere therewith. In short, the model is a carefully made mechanism, to represent the movements which the mechanism of the Liddell Drawing, No. 1, would have.

Q. 4. What relation exists between the Liddell Drawing, No. 1, and the Liddell affidavit, which is marked Defendant's Exhibit, Amended Draft of Liddell Affidavit?

A. Section 10, of the Liddell Affidavit, is an accurate description of the parts of Liddell Drawing, No. 1; and Section 11, of that affidavit, sets forth a description of the mode of operation which Mr. Liddell states in that affidavit he expected the mechanism of Liddell Drawing, No. 1, to have, and he describes that expected mode of operation as follows:

"The cam K′ was to revolve in the direction indicated by the arrow thereon, and was to cause the arm F′ and the arm F, to rock upon the shaft *f*, in such a way as that the forming-plate E, (as its edge W would advance with the notch under that edge in the cylinder C,) could rise just enough to enable the edge W to accompany the notch on its way around the shaft B, of the cylinder C, until the plate E would occupy a position in line with the radius of the cylinder C, and thereupon, to fall just enough, and just fast enough to allow the edge W, of the plate E, to accompany that notch still farther. The plate E, was to be caused

to turn upon the shaft *e*, by the gears K, K^2, M', M, M, & N, and that turning was to be always in an anti-clockwise direction, and to consist of a series of continuous revolutions round and round the shaft *e*. Those revolutions, though they were to be continuous, in the same direction, and without any stopping, were to be varied in their speeds during each revolution, by the eccentricity of the gears K, and K^2, in the same way in which two eccentric gears are well known in the art of gears, to be capable of causing the speed of a part rotated thereby, to vary during each revolution."

Q. 5. What consideration, if any, have you given to the question whether the machine of Liddell Drawing, No. 1, can be made (either with or without changes in form or proportion of its parts) to have the mode of operation which Mr. Liddell set forth in section 11, of his affidavit, as being the mode of operation which he had expected that machine to have?

A. I have given careful and extensive consideration to the matter of this question, and have reached a conclusion thereon.

Q. 6. What is that conclusion?

A. I have found by a close and complete analysis, that it would not be possible to construct a machine composed of the parts of Liddell Drawing, No. 1, in any contours or proportions of said parts, in such a way as to enable that mechanism to have the mode of operation which Mr. Liddell expected it to have; or indeed, to be operable at all.

Q. 7. Please state the analysis which conducted you to that conclusion?

A. Mr. Liddell in the foregoing description of the mode of operation which he expected the machine of the Liddell Drawing, No. 1, to have, does not state how much further the edge W, of the plate E, was to accompany the notch in the cylinder C, after the said plate had reached a position radial to the cylinder; but it is deducible from the contour

of the cam K′ ; which contour shows that after the arm F, has risen enough from the position shown in Liddell Drawing, No. 1, to enable the plate E, to reach a position radial to the cylinder, it will promptly fall back again to nearly the position shown in the said Liddell Drawing, No. 1. This alternate rising and falling of the arm F, implies that the edge W, of the plate E, is to accompany the notch in the cylinder, nearly the same distance after that notch passes directly between the center of the shaft *e*, and the center of the shaft B, that it must accompany that notch before reaching that position. The time through which the edge W, should accompany the notch in the cylinder, is thus divided into two nearly equal stages, by the instant when the plate E, is radial to the cylinder C, at which time the arm F, has reached its upper position. During both these stages of the operative movement of the edge W, of the plate E, said edge must move through a path concentric with the shaft B, and at exactly the same speed as the notch in the cylinder under that edge.

The first of these stages of movement is impossible ; because that result cannot be accomplished without reversing the movement of the gear M′, which reversal would require the turning backward of the whole machine, during which backward turning the machine would be inoperative. This conclusion is based on the following analysis :

When the machine starts from the position of Liddell Drawing, No. 1, the edge W, is only slightly in advance of a straight line between the centers of the shafts *f* and B ; and no materially more advanced initial position would be compatible with the operativeness of the plate E, in the opening out of the forward end of a tucked paper tube. This nearness of the edge W, to a straight line, will permit only a very slight turning of the plate E, about the shaft *e*, during the first stage of its movement. This permissible turning of the shaft *e*, gradually increases as the arm F,

rises, and amounts to a total of about thirty degrees when the arm F, has reached its upper position. But this turning does not amount to as much as one degree during the first quarter of that movement. Now, the rising of the arm F (in the absence of any other influence to cause the upper gear M, to revolve), would cause the shaft *e*, to turn more than twenty-five degrees in the direction of its arrow, while the arm F, was rising sufficiently to allow the plate E, to go through the first stage of its movement; and while the upper gear M, would travel at a varying speed, that speed would be in a decreasing ratio, from high at the commencement of its stroke, to a slow speed at its completion, instead of continually increasing, as the rotation of the shaft *e*, must do, to enable the edge W, to accompany the notch in the cylinder, during the first stage of the movement of the plate E.

To cause the upper gear M, to revolve in the direction of its arrow, very slowly, when the machine starts from the position shown in Liddell Drawing, No. 1, and gradually increase its speed of revolution in the direction of its arrow, while the plate E, was going through its first stage, of movement, necessitates the subjection of the upper gear M, to some power which would first diminish, and afterwards increase, the speed of that tendency to rotation, which that gear receives from the rising of the arm F. To accomplish this result, it would be necessary to subject the upper gear M, to some power which would cause it to revolve in a direction opposite to its arrow, and thus make it revolve slower in the direction of its arrow, and later, to cause it to revolve in the direction of said arrow, and thus make it revolve faster in that direction. It thus appears that whatever power is applied to accomplish these consecutively opposite results, must operate alternately in opposite directions. Now, the gear M′, is the only power shown in Liddell Drawing, No. 1, which acts upon the upper gear M, to

modify the revolution of that gear, which results from the rising of the arm F; but M', must always turn in one direction, and therefore cannot impart to the upper gear M, the initially slow and slowly increasing speed of rotation, which is necessary to cause the edge W, to properly co-act with the notch in the cylinder C.

Furthermore, even though the train of gearing K, K^2, M', M, M, and N, could be so proportioned as to enable it to do its part in *causing* the edge W, of the plate E, to accompany the notch in the cylinder through the first stage of its movement; the cam K', has not a proper profile to cause the arm F, to so rise as to *allow* said edge W, of the plate E, to co-act with the notch in the cylinder, during the first stage of the movement of the plate E. The contour of the cam K', as shown in Liddell Drawing, No. 1, would cause the arm F to rise much too slowly during the early part of its first stage, and much too rapidly during the latter part of that first stage.

Even if the first stage of the necessary movement of the plate E, were possible, the second stage would be impossible; because the arm F, is falling, during the second stage instead of rising, as in the first stage; and because the reversal of the movement of the arm F, tends to reverse the direction of the turning of the upper gear M; and because the gear M' must turn in the same direction, during both stages and therefore cannot counter-act the tendency to reversal of the upper gear M, which occurs the instant the arm F, stops rising, and begins to fall; and because that uncounteracted tendency to reversal, will stop the forward movement of the edge W, of the plate E, at the end of its first stage. Furthermore, even though the train of gearing K_1 K^2, M', M, M, and N, could be so proportioned, as to enable it to do its part in causing the edge W, of the plate E, to accompany the notch in the cylinder, under its edge, during the second stage of its movement, the cam K', has not the

proper profile to cause the arm F, to so fall, as to allow said edge W, of the plate E, to co-act with the notch in the cylinder, during the second stage of movement. The cam K', as shown in the Liddell Drawing, No. 1, would cause the arm F, to fall much too rapidly during the early part of the second stage of its movement, and much too slowly, during the latter part of that second stage.

The foregoing analysis shows that the upper gear M, must always turn in the direction of its arrow, while the edge W, of the plate E, is going through both stages of its movement in co-action with the notch in the cylinder, under its edge; and that analysis shows that the upper gear M, must turn slowly at the beginning of the first stage and gradually increase its speed of rotation to the end of that first stage, and must then continue its rotation in the same direction, to the end of the second stage of that movement. Said analysis also shows that the profile of the cam K', is not of such a contour as would enable said cam to co-operate with any mechanism to cause the edge W, of the plate E, to accompany the notch in the cylinder, through either or both the stages of the required movement, of the said edge W, of the plate E.

It is not possible to so change the contours or proportions of any or all the parts of the machine of the Liddell Drawing, No. 1, as to construct a machine of those parts in such a way as to cause the edge W, of the plate E, to move through a path concentric with the periphery of the cylinder C, and at a uniform speed with the notch across the periphery of said cylinder and to thus accompany said notch, from the position shown in Liddell Drawing, No. 1, until the plate E, would stand in a position radial to the cylinder C; and even if that result were possible, it would still be impossible to construct a machine of those parts in such a way that the edge W, of the plate E, would accompany that notch through the second stage of the required movement.

For the foregoing reasons, the machine of the Liddell Drawing, No. 1, can never be made, in any contours or proportions of its parts, so as to have the mode of operation stated in section 11, of the Defendant's Exhibit, Amended Draft of Liddell Affidavit, to be the mode of operation which Mr. Liddell expected that mechanism to have; and that mechanism can never be made in any contour or proportion of its parts, so as to be operative to open out the end of a tucked paper tube, and fold it down into a diamond form.

Q. 8. Have you undertaken to ascertain and show what essential changes must be made in the mechanism of the Liddell Drawing, No. 1, in order to enable such mechanism to properly operate the plate E, of that drawing; and if so, please to state and explain what you have done in that direction?

A. I have made an extended investigation with a view to ascertain the essential changes which must be made in the machine of Liddell Drawing, No. 1, to cause the edge W of the plate E, to traverse the desired path. Defendant's Drawing, No. 17, which I have made and present herewith, shows the two essential changes in the mechanism, necessary to enable it to produce that result. The first consists in the alteration of the contour of the cam K′, from that shown in Liddell Drawing, No. 1, to that shown in Defendant's Drawing, No. 17. The second consists in somehow altering the motion of the gear M′, from a continuous rotary motion in the direction of its arrow, to a motion which begins by turning in an opposite direction, and afterwards changes to a motion in the direction of its arrow, and continues in that direction through the rest of the time occupied by one revolution of the plate E.

The first change is necessary to *permit* the edge W, of the plate E, to accompany the notch in the cylinder under its edge, through the first and second stages of its necessary movement; and the second change is necessary to *com-*

pel the edge W, of the plate E, to thus accompany that notch during the stages of its movement.

In said Defendant's Drawing, No. 17, is shown a diagramatic lay-out of the proper paths and timings of the edge W, of the plate E, and of the shaft *e*, at the free end of the arm F, and there is also shown the only contour of the cam K′, which is adapted to cause the arm F, to rise, and to allow it to fall in such time, as to allow the edge W, of the plate E, to travel in a path concentric with the periphery of the cylinder, and in proper time, to enable it to accompany a notch across the periphery of the cylinder, through the first and second stages of the movement of the plate E. There is also shown in said Defendant's Drawing, No. 17, a diagramatic path Y, on an enlarged scale, divided to indicate the necessary timing of the gear M′ to enable it to co-operate with the other parts of the mechanism, to cause or compel the edge W, of the plate E, to traverse the paths X, Y.

The paths and profiles of said Defendant's Drawing, No. 17, are divided as to time, in accordance with a division into equal parts, of one-half the periphery of the cylinder C, and the division points on all the paths and profiles, are numbered to correspond to like division points on the periphery of the cylinder.

At X, is shown the path of the edge W, of the plate E, as it travels in coincidence with the notch in the periphery of the cylinder. At Y, is shown the path of the edge W, as it sweeps through space about the shaft *e*, as said shaft rises, and falls back again into position to go through another cycle of movement. At Z, is a diagramatic lay-out of the path of the shaft *e*, during the time of one complete revolution of the plate E. The true path of the shaft *e*, is in one arc of a circle, concentric with the shaft *f*; but the diagramatic path Z, is opened up into four distinct lines to facilitate the following of the steps in the movement of said shaft *e*, throughout its whole cycle of

movement. The arrow-heads on said path Z, indicate the direction in which the said shaft *e*, is travelling, when at the various positions indicated on said diagramatic paths. At F and F′, is shown in full lines, the positions of the arms F, and F′, when the arm F is at its lowest position, and at F^2 and F^3, when the arm F, is in its highest position. The plate E, is shown in full lines, in the first position of its first stage of movement, and in dotted lines at E^3 at the instant said plate E reaches a position radial to the cylinder, where it has finished the first stage of its movement, and is about to enter upon the second stage thereof. At E^4 said plate is shown in dotted lines at the end of its second stage, and at a point where the edge W, is just about to leave the periphery of the cylinder, and sweep through space back to its initiated position, as shown at 1.

If we now follow step by step, a portion of the syncronous movements of the parts of Defendant's Drawing, No. 17, it will be seen that the edge W, of the plate E, starts from 1, in the path X, and passes therefrom, to 2, and 3, in said path. At the same time, the shaft *e*, moves up from 1, in its path Z, to 2, and 3, in said path. It will be observed that the angular movement of the plate E, about the shaft *e*, during this time, is very slight, and that the upward movement of the shaft *e*, is considerable. Also, I have previously stated that the comparatively long early travel of the shaft *e*, in its upward path, during the comparatively small early angular movement of the plate E, necessitated a backward motion of the gear M′, to compensate therefor. This necessary backward movement of the gear M′, is indicated from 1, in the path V, (which position corresponds with a given point on the gear M′,) and then on to 2, and to 3, in said path. At this time, the shaft *e*, will have risen high enough to cause the plate *e*, to have a much increased angular movement about the shaft *e*, which increased angular movement, at a point between 4 and 5, on the path

Z, is just sufficient to compensate for the upward motion of the shaft *e*, and the gear M′ therefore ceases its backward movement, and for an instant, stands still, as shown between 4 and 5 in its path V.

If we now continue the tracing of the movement of the edge W, of the plate E, with the notch, we will see that the angular movement of the plate E, about the shaft *e*, exceeds the upward movement of the shaft *e*, in its influence upon the gear M′, which gear therefore moves forward in a direction opposite to that in which it travels from 1 to 4, in the path V, that is, it now turns in the direction of its arrow. But, it is not until the plate E, has neared the end of its first stage, that is between 7 and 8, in its path X, that the gear M′, has again reached its initial position shown at 1, in its path V. The said gear M′ continues its forward movement at a slightly increasing speed, due to the slow upward movement of the shaft *e*, as the arm F, nears its uppermost position shown at F^2 combined with the nearly maximum speed of rotation of the plate E, about the shaft *e*, during either its first or second stage of movement.

At 9, in the path X, the plate E, has reached the end of its first stage, shown by a dotted line at E^3, and the shaft *e*, has reached its highest position in the path Z, and the arm F′ is at the extreme outward end of its stroke, as shown in dotted position at F^3, and the roll at the free end of said arm, is in contact with the high part 9, of the cam K′.

The edge W, of the plate E, now enters upon the second stage of its co-action with the notch in the periphery of the cylinder, and continues its movement from 9 to 10, and to 11, in the path X, and the gear M′ continues to rotate in the direction of its arrow, and at a slowly increasing speed. The instant of the reversal of the direction of the movement of the arm F, from a rising to a falling movement, is by nature of the profile of the cam K′,

approached and departed from so gradually, that the influence of this reversal, upon the increasing speed of the gear M′, necessitated by the large angular movement of the plate E, about the shaft *e*, is very slight, and the ratio of the speed of the said gear M′, continues to increase during the remainder of the second stage of the co-action of the edge W, of the plate E, with the notch in the periphery of the cylinder Just beyond 16, in the path X, the edge W, of the plate E, has reached the end of its co-action with the notch in the cylinder, and between 16, and 17, in the path Z, the shaft *e*, has reached its lowest position, at the end of its second stage of movement. Also the roll at the free end of the arm F′, is in engagement with a low part of the cam K′, as indicated at about 17, on the periphery of said cam.

Said cam K′, now continues to revolve in the direction of its arrow. The arm F, and the shaft e, rise and the gear M′ continues to revolve in the direction of its arrow, but at a decreasing speed, and the edge W, of the plate E, sweeps through space, from 17 to 24 in the path Y. At this point, the shaft *e*, has again reached its highest position, at 24, (which coincides with 9,) and remains in that upper position, while that part of the periphery of the cam K′, which is indicated by figures 23 to 38, and which portion of said periphery coincides with the circumference of a circle, is in contact with the roll at the free end of the arm F′. During this time, the edge W, of the plate E, is turning about the shaft *e*, which shaft is then stationary in space, except for rotation about its own axis, from 24 to 39, in the path Y. Now, the roll at the free end of the arm F′, commences to ride down the descending portion of the cam K′, from 39 to 40, and 41.

The various parts now continue their several movements, until they again reach the positions shown in Defendant's Drawing, No. 17, with the edge W, of the plate E, at its

initial position 1, at the end of the path Y, and the commencement of the path X, at which time the mechanism is ready to start upon another cycle of movement.

It will thus be seen from Defendant's Drawing, No. 17, and the movements of the parts shown therein, necessary to cause or compel the edge W, of the plate E to properly co-act with the notch across the cylinder C, and to do its part of the work of opening out the forward end of a tucked paper tube, that these movements are both theoretically and practically impossible to the mechanism of Liddell Drawing, No. 1, even by any possible changes in the contours or proportions of any or all of the parts thereof. It will therefore be seen that the machine of Liddell Drawing, No. 1, is inoperative and useless to open out the forward end of a tucked paper tube, and fold the same down into a diamond form.

Mr. Walker offers in evidence the drawing which the witness has explained in answer to Q. 8, and requests that it be marked "Defendant's Drawing, No. 17" Frederick C. Hunter, Notary Public, and it is accordingly so marked.

Q. 9. Please to look at the drawing I now show you, which is already marked "Defendant's Drawing, No. 16", and state what it represents?

A. Defendant's Drawing, No. 16, represents the essential parts of figure 1, of the Liddell patent, No. 558,969, but upon an enlarged scale, with the addition of a spring to hold the roll at the left-hand end of the rod *k*, in constant contact with the edge of the cam K'.

Q. 10. Please to state how the mechanism of Liddell Drawing, No. 1, differs from the mechanism of Defendant's Drawing, No. 16?

A. The mechanism of Defendant's Drawing, No. 16, differs from the mechanism of Liddell Drawing, No. 1, in several particulars including the following:

First.—In Liddell Drawing, No. 1, the gear M' is caused

to revolve continuously in the direction of its arrow, by means of the gears K, and K^2; whereas, in Defendant's Drawing, No. 16, the gear M', is caused to alternately rock in opposite directions by means of the cam K, the rod, k, and link k^2.

Second.—In Liddell Drawing, No. 1, the upper gear M, lower gear M, and the gear N, are caused to rotate continuously in the directions of their arrows respectively; whereas in Defendant's Drawing, No. 16, the upper gear M, lower gear M, and the gear N, are caused to rock alternately in opposite directions, and never revolve even once about their respective axes.

Third.—In Liddell Drawing, No. 1, the plate E, is caused to revolve continuously round the shaft *e;* whereas, in Defendant's Drawing, No. 16, the plate E, is caused to oscillate from a position shown in said Defendant's Drawing, No. 16, in an anti-clockwise direction, aggregating much less than half a revolution, and then back again, to the position shown in said Defendant's Drawing, No. 16.

The second and third of the differences mentioned, are resultants of the first difference and therefore; the radical difference between the mechanism of Liddell Drawing, No. 1, and Defendant's Drawing, No. 16, consists in the first difference noted; that radical difference including a difference in construction, and a difference in mode of operation, which differences result in a potential difference of function.

That difference in construction consists in Defendant's Drawing, No. 16, having a cam K, in place of the gear K, and having a rod k, and a link k^2, and an arm connecting said link with the gear M', instead of having a gear K^2. That difference in mode of operation consists in the use of mechanism to rock the gear M' in Defendant's Drawing, No. 16, instead of the use of mechanism to rotate the gear M', in the Liddell Drawing, No. 1.

The potential difference of function between the mechanism of Defendant's drawing, No. 16, and the mechanism of Liddell Drawing, No. 1, consists in the fact that it is possible, by various changes in the contours and proportions in many of the parts of the Defendant's Drawing, No. 16, and the addition of one spring, to construct a machine in such a way as to make the edge W, of the plate E, travel concentric to the periphery of the cylinder, and at a uniform speed with the notch under the edge W, and thus accompany that notch from the position shown in Defendant's Drawing, No. 16, until the plate E, reaches a position radial to the cylinder, and continues to accompany thatnotch, or other definite location across the periphery of the cylinder, far enough to enable the plate E, to do its part in the operation of opening out the forward end of a tucked paper tube, and folding the same down into a diamond form.

Mr. Walker offers in evidence the drawing shown to the witness, in putting Q. 9, and requests that it be marked "Defendant's Drawing, No. 16, Frederick C. Hunter, Notary Public" and it is accordingly so marked.

Q. 11. Please to assume that Liddell Drawing, No. 1, correctly represents the scheme which Mr. Liddell contrived for a paper bag machine, in the latter part of 1895, and presented to Rudolph M. Hunter, as the foundation for what afterwards became the application for the Liddell patent, No. 558,969; and on that assumption, please to state how you would account for the drawings of that patent being made to show the different construction of Defendant's Drawing, No. 16?

A. I would account for the differences, between the Liddell Drawing, No. 1, and the drawings of the Liddell patent, No. 558,969, by the hypothesis that when Mr. Hunter, or the draftsman who made the drawings for the Liddell patent, No. 558,969, discovered by analyzing the Liddell sketches, that the

gear M′ must not revolve continuously in one direction, but must first turn backward, for a time, and then forward for a time, in order to impart to the plate E, its necessary movements, that he himself, having made that discovery, contrived the cam, K, the rod *k*, the link k^2, and the arm connecting said link with the gear M′, and substituted the parts thus contrived by him, for the elliptical gears K, K^2, which Mr. Liddell had contrived for the purpose of transmitting motion from the shaft L, to the gear M′.

Q. 12. Have you compared Liddell Drawing, No. 1, with the description and claims of the Liddell patent, No. 558,969, with a view to ascertain whether that description or those claims contain statements or indications inconsistent with Liddell Drawing, No. 1; and if you have made such a comparison, please to state the results thereof?

A. I have made such a comparison, and find that in the description and claims of the Liddell patent, No. 558,969, there are many statements inconsistent and contrary to the matter set forth in Liddell Drawing, No. 1. I find in the description in said patent, the following matter that is not upheld by the Liddell Drawing, No. 1. Page 1, commencing at line 8, "It consists of certain improvements which are fully described in the following specification and are shown in the accompanying drawings which form a part thereof". And same page, commencing at line 27, "The forming-plate is then caused to rotate about its rear edge." And on the same page, line 48, "Figure 1, is a side elevation of a paper bag machine embodying my improvements." Same page, line 94, "M′ is substantially fixed, and hence when the arm F, is moved, its gears M, work upon gear M′, as if it were a rack. This causes motion to the plate E, about *e*, as an axis". Same page, line 100, "I cause the gear M′ to be moved somewhat to compensate for this. On the shaft L, I arrange a cam K, which acts upon a rod *k*, to reciprocate

it, and this by link k^2, rocks the gear or rack M'." Page 2, line 3, The cam "K,". Same page, line 43, "The rear or free end of the former-plate E, is provided with eyes E^2, which are received upon projections A', as clearly shown in figure 3, so as to be maintained out of the line of the bag tube in entering between the said plate, and the cylinder C, after it has been caught by the nipper *c*, and moved forward." Same page, line 55, "the eye E^2 leaves the projection A', as shown in figure 4". Same page, line 110, "the said plate is caused to return to its original position, by the operation of the arm F, cams, and gears, so that it shall be in the proper position, to receive the next paper tube. As before explained, the gear M' is in effect substantially a rack, but moved by cam K,". Same page, line 124, "insures the edge W, moving exactly at the same speed of the surface speed of the cylinder C, so as not to displace in any manner, the tube."

In the claims of said patent, I find the following, foreign to the Liddell Drawing, No. 1.

Claim 1, line 31, "operating means for the forming-plate adapted to cause the said plate to oscillate, about its rear edge, upon the surface of the cylinder, during the rotary movement of said cylinder." Claim 2, line 47, "operating means for the forming-plate, adapted to cause the said plate to oscillate about its rear edge, upon the surface of the cylinder, during the rotary movement of said cylinder". Claim 3, line 68, "operating means for the forming-plate adapted to cause the said plate to oscillate about its rear edge, upon the surface of the cylinder, during the rotary movement of said cylinder," and in said claim, line 76, "power devices for returning the forming-plate to its original position to receive a new bag tube, means to sustain the rear of the forming-plate clear of the surface of the revolving cylinder, so as to permit the proper entrance of the paper bag, between the former-plate and the surface of the cylinder".

Claim 4, line 93, "operating means for the forming-plate adapted to cause the said plate to oscillate about its rear edge upon the surface of the cylinder, during the rotary movement of said cylinder." Same claim, line 99, "means to sustain the rear of the forming-plate, clear of the surface of the revolving cylinder, so as to permit a proper entrance of the paper bag between the former-plate and the surface of the cylinder." Claim 5, line 119, "power devices for moving said movable frame, power devices for oscillating the said forming-plate upon the movable frame, so that its rear edge travels in conjunction with, and at the same rate of speed, as the cylinder." Claim 6, line 11, "power devices for moving said movable frame, power devices for oscillating the said forming-plate upon the movable frame, so that its rear edge travels in conjunction with, and at the same rate of speed as the cylinder." Claim 7, line 27, "operating means for the forming-plate, adapted to cause the said plate to oscillate about its rear edge upon the surface of the cylinder, during the rotary movement of said cylinder." Same claim, line 33, "connecting mechanism for timing the movements of the rotating cylinder, and the forming-plate." Claim 8, line 50, "power devices for moving said movable frame, power devices for oscillating the said forming-plate, upon the movable frame, so that its rear edge travels in conjunction with, and at the same rate of speed as the cylinder." Same claim, line 57, "connecting devices for timing the movements of the movable frame, the former-plate and the rotating cylinder."

Q. 13. What consideration, if any, have you given to the question whether the machine of Defendant's Drawing, No. 16, can be made (either with or without changes in form or proportions of its parts) to have the mode of operation ascribed to it in the Liddell patent, No. 558,969, and to be an operable machine?

A. I have given considerable consideration to this question, and have reached a conclusion thereon.

Q. 14. What is that conclusion?

A. That conclusion is, that the mechanism that is set forth in Defendant's Drawing, No. 16, is inefficient and inoperable, to perform the functions which it is said to perform, and to cause the edge W, of the plate E, to properly co-act with a notch across the cylinder C, through the two stages of the movement of said plate E.

But that by numerous changes in the contours and proportions of its various parts, and by the addition of a spring, to cause the roll in the left hand end of the rod *k*, to keep in continuous contact with the edge of the cam K, a mechanism of the Liddell patent, No. 558,969, could be contrived which would be at least kinematically operable to cause the edge W, of the plate E, to travel in coincidence with a notch across the periphery of the cylinder C, through the stages of the necessary co-action therewith. And while this mechanism would be theoretically operable, the necessary proportions of some of its parts would preclude its practical usefulness, in competition with other machines for like purpose.

Q. 15. You have explained in reply to Q. 8, that two essential changes must be made in the machine of Liddell Drawing, No. 1, in order to enable such mechanism to properly operate the plate E, of that drawing; the first of those necessary changes consisting in the alteration of the contour of the cam K′, from that shown in Liddell Drawing, No. 1, to that shown in Defendant's Drawing, No. 17; and the second of those changes consisting in somehow altering the motion of the gear M′ from a continuous rotary motion in the direction of its arrow, to a motion which begins by turning in an opposite direction, and afterwards changes to a motion in the direction of its arrow, and continues in that direction through the rest of the time occupied by one revolution of the plate E.

Now, please to state whether those two changes would be within the reach of mechanical skill, on the one hand; or would require invention, on the other hand?

A. The first of the changes noted in the question, that is, the changing of the contour of the cam K′, from that of Liddell Drawing, No 1, to that of Defendant's Drawing, No. 17, would be within a mechanic's ability. But the second change referred to, that is, the devising of some means, to change the continuous rotary movement of the gear M′ of the Liddell Drawing, No. 1, to a motion that is first a backward motion contrary to the arrow of the gear M′, of Liddell Drawing, No. 1, and then to a forward movement in the direction of that arrow, would be beyond a mechanic's skill, and not in the field of mechanical engineering. My reason for this, is that to cause the gear M′, to have these alternately opposite movements, requires radical changes in the construction and mode of operation of the Liddell Drawing, No. 1, and which radical changes are in the field of invention, and not that of mechanical engineering.

Q. 16. Please to assume that whoever contrived the plan of the Liddell patent, No. 558,969, was furnished with the plan of Liddell Drawing, No. 1, as a basis for his work; and please to state whether the production by him, of the plan of the Liddell patent, No. 558,969, as that plan is shown in Defendant's Drawing, No. 16, was the result of mechanical or engineering skill, on the one hand; or whether, on the other hand, it was the result of invention, exercised by him?

A. If the man who made or devised the plan of Defendant's Drawing, No. 16, had only the plan of Liddell Drawing, No. 1, to guide him; the production of the plan of said Defendant's Drawing, No. 16, was decidedly a production of invention, rather than a production of mechanical engineering skill.

Q. 17. On what ground, is that conclusion based?

A. That conclusion is based on the fact that the Defendant's Drawing, No. 16, contains elements whose mode of operation are radically different from the elements and mode of operation of Liddell Drawing, No. 1, and that these differences in construction and mode of operation, result in a marked difference of function, and that said differences are beyond the field of a mechanic's work, and were only to be accomplished by invention.

This is based on an extensive and long acquaintance on my part, with machinists, mechanical engineers, and inventors, and intimate acquaintance with the different grades and kinds of work produced by them.

Adjourned until Wednesday, May 6, 1903, at 11 o'clock A. M.

Wednesday, May 6, 1903, at 11 o'clock A. M. Adjourned until Friday, May 8, 1903, at 11 o'clock A. M.

Friday, May 8, 1903, 11 o'clock A. M. Met pursuant to adjournment; counsel present as before.

Cross examination by Mr. Betts:

X-Q. 18. Referring to the analysis set forth in your answer to Q. 7, and which you state led you to the conclusion "that it would not be possible to construct a machine composed of the parts of Liddell Drawing, No. 1, in any contours or proportions of said parts, in such a way as to enable that machine to have the mode of operation which Mr. Liddell expected it to have, or indeed to be operable at all." What did you do in connection with that alleged analysis, except thinking it out in your head. Did you make any calculations, memoranda, drawings, or models of any kind. If so, what?

A. To reach the conclusions stated in my answer to Q. 7, in addition to studying and thinking out the various actions and co-actions, of the mechanism of Liddell Draw-

ing, No. 1, I made Defendant's Drawing, No. 17, and several rough sketches, and some plottings, of various kinds, and by putting the different parts of the Liddell Drawing, No. 1, through their various motions by means of paper templates and tracings, modified in various ways, I reached the conclusions stated.

X-Q. 19. Will you please produce for my inspection all of the memoranda, calculations, and models, and material of any kind, you used in connection with the analysis, referred to in your last answer?

A. I now produce the drawings and templates referred to, and asked for in the last question.

X-Q. 20. Please explain what those drawings and sketches are, which you have produced, marking them in succession with letters of the alphabet so as to identify them?

A. The drawing or tracing, marked A, is a plotting of the time and movements of the edge W, of the plate E, on the theoretical assumption, that the gear M′ does not rotate, and that the upper gear M, rolls upon said gear M′, as upon a rack. Also the correct contour has been supplied to the cam K′, to enable it to co-operate, with proper mechanism, to cause the edge W, of the plate E, to co-act with the notch in the cylinder, and to travel in time with said notch, in the stages of its action therewith. The drawing marked B, is the plotting of a curve to illustrate graphically, the necessary timing of the gear M′, to cause the edge W, of the plate E, through the train of gearing M, M, N, and in co-operation with the cam K′, and the arms F, and F′, to move through a path concentric with the periphery of the cylinder C, and in time and co-action with a notch across the periphery of said cylinder. The blue print C, is a print from Defendant's Drawing, No. 17, and on which I have plotted a path through space, of the edge W, of the plate E, which it might follow when

driven through the train of gearing, M, M, N, and the pair of mongrel gears, a portion of whose pitch lines are shown in pencil on said blue print, about the centers f, and L. Diagrams D, and E, are the original plottings of the partial pitch lines of the mongrel gears referred to in connection with the blue print C.

Complainant's counsel asks the Examiner to mark for identification, the five drawings viz.: four tracings and one blue print, referred to in the above answer, for identification on the part of complainant, "Stone Drawings, A, B, C, D, and E", and they are accordingly so marked.

X-Q. 21. About how long did it take you to make the analyses and drawings referred to above?

A. I am unable to make a definite reply to this question, as the work referred to, was not done consecutively. I believe however, that I spent in the neighborhood of one week on this investigation.

X-Q. 22. Do these drawings marked for identification A, B, C, D, and E, embody all the memoranda, drawings, or models you made, in connection with the investigations made, by you, in order to answer Q. 8; namely, to ascertain and show what essential changes must be made in the mechanism of Liddell Drawing, No. 1, in order to enable that mechanism to properly operate the plate E of that drawing?

A. I believe with the exception of some small pieces of rough tracings, and preliminary data, which went into the scrap-basket, that the drawings and print referred to, include all the sketches, etc., that I made in connection with this investigation.

X-Q. 23. Referring to your answer to Q. 6, what exactly do you mean by the words "composed of the *parts* of Liddell Drawing, No. 1" in that answer?

A. I meant the gears K, K^2, M′, M, M, and N; the cam K′; arms F″ and F; plate E, shafts L, f, e; cylinder

C, and its shaft B; and the shafts on which the gears M, M, turn, which are the essential elements in the mechanism for operating the plate E, in connection with the cylinder C. I will also include gears M^2 and M^3.

X-Q. 24. Is your statement in your testimony, intended to be so broad as to say that it is impossible to construct a machine composed of the parts you have just enumerated, no matter how the contours of said parts should be varied, or the parts proportioned to each other, and under any such variation, of contours or proportion of parts, that could be devised, an inoperative machine would inevitably be the result?

A. Based upon my extended investigation of the mechanism in Liddell Drawing, I believe that no changes in the contours or proportions of the parts of said mechanism, could be made to produce a machine that would be operative in the manner in which Mr. Liddell states in his affidavit, "Defendant's Exhibit, Amended Draft of Liddell Affidavit", that he expected that mechanism to work, or indeed, to be operable at all, to open out the end of a tucked paper tube, and fold it down into a diamond form.

X-Q. 25. The statement of your last answer, seems to me quite different from your final statement in answer 6, where you used the words "operable at all". You now seem to qualify these, by the last sentence of your last answer, "to open out the end of a tucked paper tube, and fold it down into a diamond form." That apparently refers to bag making operativeness or commercial operativeness. Why have you limited your former broad statement? Or is the last statement all you ever meant?

A. The last statement in my answer to X-Q. 24, was not intended as a limiting, but explanatory clause, and the meaning I had in mind, as to "operable at all" in my answer to Q. 6, was that the mechanism of the Liddell

Drawing, No. 1, could not be made by any changes in the contours or proportions of any or all of its parts, to cause the edge W, of the plate E, to co-act with a notch in the periphery of the cylinder, so as to accompany that notch through its two stages of desired co-action therewith.

X-Q. 26. Will you allow any change that can be made in the contour of the cam of Liddell Drawing, No. 1, and any changes that can be made in the contours of the gearing of Liddell Drawing, No. 1, and still state that no such changes with proper proportioning incident thereto, can result in a mechanism which permits the cylinder and the former plate to continuously revolve in connection, and without interference with each other, in general terms as Mr. Liddell expected they would, nor in a mechanism which, to quote you, is "operable at all?"

A. Allowing any change that can made in the contour of the cam of Liddell Drawing, No. 1, and any changes that can be made in the contours of the gearing of said drawing, and with proper proportioning incident thereto; I still state that no such changes can result in a mechanism that will cause the edge W, of the plate E, to properly co-act with a notch in the periphery of the cylinder C, and accompany that notch through its stages of co-action therewith.

X-Q. 27. Have you ever seen any machine which was made or attempted to be made, in exact accordance with what is described and shown in Liddell's patent, No. 558,969?

A. I have not.

X-Q. 28. Have you ever seen any mechanism embodying what you have endeavored to show in Defendant's Drawing, No. 17?

A. I have not.

X Q. 29. Have you ever seen any mechanism embodying what you have shown, or endeavored to show in Defendant's Drawing, No. 16?

A. Defendant's Exhibit, Model of Liddell patent, No. 558,969, embodies a mechanism substantially in accordance with Defendant's Drawing, No. 10; and with the omission of one or two minor parts, is a substantial embodiment of the machine of the Liddell patent, No. 558,969, as set forth in figure 1, of that patent.

X-Q. 30. What are the one or two minor parts that you refer to?

A. The spring of the model, that is operative to hold the roll in the left hand end of the rod *k*, against the periphery of the cam K, and the pencil point representing the edge W, of the plate E, are not in the drawings of the Liddell patent; and on the other hand, the cylinder C, gear M^3, and the diamond folding fingers of the plate and cylinder, and bag blank retaining clips of the patent drawings, are omitted from the model.

X-Q. 31, Referring to the drawings of the Liddell patent, No. 558,969, do you find any notch indicated on the cylinder C, with which the edge W, of the plate E, shall properly co-act?

A. I do not.

X-Q. 32. Referring to Liddell Drawing, No. 1, do you consider the notch in the cylinder C, shown on said drawing, anything other than an indicated point on the cylinder, with reference to the edge W of the plate E, but into which it need not necessarily enter physically, to produce operative relations?

A. To produce operative relations, an indicated line across the cylinder, would be equally efficient with the notch shown in the periphery of the cylinder C, of Liddell Drawing, No. 1?

X-Q. 33. Supposing the mechanical structure otherwise operative; the edge W, of the plate E, might be at varying distances dependent on thickness of paper, etc., and within reasonable limits, from the periphery of the cylin-

der C, in the operative relation of the machine and still act, and be in operative relations of former-plate to cylinder, is that not so? I refer to Liddell Drawing, No. 1.

A. That is so.

X-Q. 34. You could not state any mathematical distance, between which the relations of edge W, to cylinder C, would be operative, and beyond which they would become inoperative, could you; since that exact dimension is dependent on size of machine, thickness of paper, and possibly other conditions?

A. It would be difficult to set mathematical limitations to the extreme distance which the edge W, of the plate E, might depart from the notch, or a given line, on the cylinder, and still be operable; but this extreme distance must in any case, be small, and it is a desirable feature to have the edge W, enter an actual notch in the cylinder in practical work, in that it defines the line across the blank and creases it with clearness and definition.

X-Q. 35. You never knew of an actual paper bag machine having had such a notch in its cylinder, did you?

A. I have not such a machine now in mind.

X-Q. 36. Defendant's machine proceeded against in this case, has no such notch in its cylinder, has it?

A. It has not.

X-Q. 37. Do you consider a mechanism for paper bag machine in which the cylinder shall continuously revolve in one direction, and the former-plate shall also continuously revolve in the same direction, coincidently and operatively with the cylinder, to be a mechanical impossibility, such as perpetual motion, for example?

A. The question seems to me so contradictory, and I cannot imagine a machine operating as described.

X-Q. 38. Do you consider a paper bag machine in which both the cylinder and the former-plate revolve continuously in operative relations, to be a mechanical impossibility, for practical purposes?

A. I do not.

X-Q. 39. Specifically how did you devise the cam shown in Defendant's Drawing, No. 17?

A. I developed the profile of the cam K′, of Defendant's Drawing, No. 17, by causing the edge W, of the plate E, carried at the free end of the arm F, to move in co-action with the notch across the periphery of the cylinder, through its two stages of movement, and marking step by step, the position of the roll at the free end of the arm F′, in its relation to evenly-spaced division points on a circular disk, on which I plotted the said profile of the cam K′, turning about the center L. In short, I developed the profile of the cam K′ from the proper motion of the parts which that cam is planned to move.

X-Q. 40. Referring to Defendant's Drawing, No. 16, and also to the drawings of Liddell patent, No. 558,969, could not you, without much difficulty, suggest other mechanisms than those specifically shown in those drawings, which would result in causing the plate E, to oscillate in the way it is caused to oscillate in the structure of those drawings?

A. I could not readily make such suggestions. The devising of other mechanisms for the purpose set forth, would involve, at the very least, considerable thought and research.

X-Q. 41. Does considerable mean a week, or less?

A. It might take a week, and it might take longer, and I do not know what success I would meet with even in that time.

X-Q. 42. Nothing at all impossible about this problem, is there?

A. I do not consider it an impossible problem, on the one hand; nor have I, on the other hand, other solutions in mind.

X-Q. 43. Well, you have not considered it at all have you?

A. Only in a very casual way.

X-Q. 44. And you would not say that somebody else might not be able to take up the problem, and suggest a different mechanism from that of the patent, which would do this particular thing, and evolve it in a few hours, would you?

A. I believe the mechanical labor involved in demonstrating the operability of any mechanism for this work, would take more than a few hours, even after the proposed plan were mentally evolved.

X-Q. 45. Referring to Liddell Drawing, No. 1, and treating it as drawn to scale, would not very slight variations of details of some of the parts shown, result in material variations of operation?

A. No slight variations of details in some of the parts shown in Liddell Drawing, No. 1, would result in material variations in the quality of the operation; but might result in considerable variation in quantity. That is, some slight variations in some of the parts of the mechanism of said drawing, might, for instance, make the curvature of the paths of some of the operating parts, greater or less, but would not be operative to change such curvatures from an outward to an inward sweep, or *vice versa*.

X-Q. 46. Is Liddell Drawing, No. 1, drawn to scale, and if so, to what scale? Or do you not know?

A. I do not know to what scale it is drawn, but the parts therein shown are drawn to a uniform scale; that is, consistent with one another.

X-Q. 47. How do you know that?

A. I know that from my study and analysis of the drawing.

X-Q. 48. Referring to your answer to Q. 11, is it not mere guess work? How did you become an expert in diagnosing what Rudolph M. Hunter would have done in connection with the Liddell application in the fall of 1895?

A. My reply to Q. 11, is as stated in that reply, hypothetical; and is what appeared to me to be the most reasonable probable solution.

X-Q. 49. Do you really think it is a reasonable probable solution, that a patent solicitor who had presented to him, a certain alleged invention, would, in drawing the application, so change it of his own invention, that you would be able to swear that the patent as applied for, was so different from the invention submitted by the inventor to the solicitor, as to not really be for the same thing?

A. I think it both reasonable and probable that a given course of events would lead to such a result.

X-Q. 50. You have not answered my question; but never mind. Have you ever taken out letters patent, and have you ever done such a thing, and would you do such a thing; as you under oath, have said you think it is reasonable and likely and probable Mr. R. M. Hunter did?

A. I have never taken out letters patent, I have never done such a thing, and I believe I would not so do.

X-Q. 51. Do you pose as an expert in psychology or mind reading, or a *nunc pro tunc* testifier as to what people whom you do not even know, might, could, would, or should have done, eight years ago?

A. I make no claims to unusual knowledge in any of the lines mentioned; but I have accumulated some knowledge of human nature, and of the condition in which inventions are often presented to solicitors for the making of patent applications.

X-Q. 52. What are the least changes in the contours and proportions of the various parts shown in Defendant's Drawing, No. 16, including the addition of a spring, which would result in a mechanism of the Liddell patent, No. 558,969, which would be operable to cause the plate E, to travel in coincident relation with the periphery of the cylinder C, through the stages of necessary co-action therewith? I refer you to Q. and A. 14?

A. The least changes in various parts of the mechanism of Defendant's Drawing, No. 16, which would result in the co-action stated in the question, are embodied in Defendant's Drawing, No. 13; and while the details of this mechanism of Defendant's Drawing, No. 13, could be modified in minor ways, it embodies substantially the least changes which could be made to accomplish the desired result.

X-Q. 53. Of course your answer to Q. 15, referring to the second change mentioned; namely: the devising of means to change the continuous rotary movement of the gear M′ of the Liddell Drawing, No. 1, to a motion first backward and then forward, and your statement of opinion, that this would "be beyond a mechanic's skill" and is "in the field of invention" is merely your opinion. You cannot give any further reason for it, than you have done in that answer, can you?

A. My answer was an expression of my opinion; but that opinion was based upon a considerable knowledge of mechanics, mechanisms, engineers, and inventors; and based on said experience and knowledge, I consider that the devising of such new means to be in the field of invention, in contra-distinction to the altering or modifying of means which might be already at hand, to accomplish the desired result.

X-Q. 54. So, also, your answers to Qs. 16 and 17, stating that it involved invention, in one furnished with the plan of Liddell Drawing, No 1, to produce the plan of the Liddell patent, No. 558,969, as shown in Defendant's Drawing, No. 16; is merely a matter of opinion on your part? Is it not?

A. My answers to Qs. 16 and 17, were based on the same reasons, set forth in my answer to X-Q. 53.

X-Q. 55. What has been your experience in connection with paper bag machinery?

A. My experience in paper bag machinery is fully set forth in reply to Qs. 3 and 4; and X-Qs. 63, to 70 inclusive, of my deposition of January, 1903, in this case.

Re-direct examination:

R-D-Q. 56. What do you say of the operativeness, or otherwise, of the mechanism of Liddell Drawing, No. 1, where the notch under the edge W, of the plate E, is absent, as compared with where that notch is present? I mean to inquire whether the presence or absence of that notch has any relevancy to the operativeness of that mechanism, or of any mechanism having the same parts, but having different contours and proportions for some or all of those parts?

A. I would consider that the presence or absence of the notch referred to, was immaterial to the operativeness of the mechanism of the Liddell Drawing, No. 1, or of the hypothetical mechanism proposed in the question.

R-D-Q. 57. Why did you mention that notch in your answer to X-Q. 25, and also in your answer to X-Q. 26, when you were speaking of what you meant by the phrase "operable at all", in your answer to Q. 6?

A. I used the term "notch" as a convenient and brief expression for an actual notch, or a line, either imaginary or otherwise, across the periphery of the cylinder; and as this actual notch was a feature of the Liddell Drawing, No. 1.

R-D-Q. 58. In your reply to Q. 6, you stated that you had found that it would not be possible to construct a machine composed of the parts of Liddell Drawing, No. 1, in any contours or proportions of said parts, in such a way as to enable that mechanism to be operable at all. Please to define precisely what operation that answer contemplated, as being impossible, to the mechanism referred to in that answer? And do not include in your definition any incidental or

unnecessary feature of the hypothetical operation you had in view; but please define with precision, the essential character of the operation which your analysis found to be impossible ?

A. The operation of the mechanism referred to in this question, which I found to be impossible, was the operation which would cause the edge W, of the plate E, to move in conjunction with, or close proximity to, a line across the periphery of the cylinder, and in a path concentric with said periphery, and at exactly the same speed as the line across said periphery, through the two stages of the movement of said plate E, as shown in the path X, from 1 to just beyond 16, in said path, of Defendant's Drawing, No. 17.

Deposition closed.

WILBUR M. STONE.

1771

UNITED STATES CIRCUIT COURT,

FOR THE DISTRICT OF MAINE.

EASTERN PAPER BAG COMPANY

vs.

CONTINENTAL PAPER BAG COMPANY.

STIPULATION.

It is hereby stipulated by and between the parties to the above entitled cause, as follows:

First.—That during the Month of May, 1904, but not afterward, the defendant may take rebutting evidence upon the following points:

1. Evidence showing, and evidence tending to show, that the typewritten sheets of specification, which were sent to the Patent Office by Rudolph M. Hunter, on or about January 27, 1896, as a part of the application for the Liddell case A, (which application was filed in the Patent Office, February 6, 1896, as Serial Number 578,291,) were not in existence when William Liddell made the signatures and took the oaths, which he made in Mr. Hunter's office on January 7, 1896.

2. Evidence showing, and evidence tending to show, that the amendments, which Rudolph M. Hunter testified he made to the original drawings and original specification of said Liddell case A, on January 7, 1896, were not made in the presence of William Liddell, or under his direction, or even with his knowledge.

3. Evidence showing that "Complainant's Exhibit, Operative Model from Liddell Drawing No. 1" represents a mechanism which would be inoperative for working the plate E of Liddell patent No. 558,969, in a paper bag machine.

Second.—That during the month of June, 1904, but not afterward, the complainant may take surrebutting evidence in response to whatever rebutting evidence shall have been taken by the defendant prior thereto.

Third.—That the defendant's evidence, under the first above mentioned head, shall be confined to the testimony of Henry Drury, William L. Evans, Miss M. R. Kelly, and Albert Haverstick, or such of them as may testify; plus the testimony of whatever person or persons may be called to testify to the physical character, arrangement and connection of the papers in the Patent Office, which constitute the file wrapper and contents in the matter of Letters Patent of the United States, No. 558,969, granted April 28, 1896, to the Eastern Paper Bag Company, as assignee of William Liddell; and plus the testimony of whatever typewriter operator or typewriter operators may be called to testify upon the question of the length of time that must have been occupied in making and verifying eleven or twelve certain typewritten sheets, and a carbon copy thereof; carbon copies of which are contained in "Complainant's Exhibit Hunter File of Case A."

The evidence under the second above mentioned head shall be confined to the testimony of William Liddell, Albert Haverstick, Henry Drury, William L. Evans, and Miss M. R. Kelly, or such of them as may be asked to testify on that subject.

And the evidence under the third above mentioned head shall be confined to the testimony of Wilbur M. Stone.

Fourth.—That the complainant's surrebutting evidence may include any testimony or other evidence, which shall tend to contradict or explain away any of the rebutting evidence, which shall have been taken on behalf of the defendant.

Fifth.—That any and all evidence taken under this stipulation shall be subject to any and all proper objections, which may be interposed at the time of the taking of such evidence, respectively.

Sixth.—That the foregoing limitation of the time for taking rebutting evidence to the month of May, 1904, and surrebutting evidence to the month of June, 1904, while intended and expected by the parties hereto to be final, shall not preclude either party from applying to the Court for an extension of time for taking such rebutting or such surrebutting evidence, as the case may be, in the unexpected event that some unforeseen emergency should make it impracticable for the defendant to close its rebutting evidence before the end of May; or make it impracticable for the complainant to close its surrebutting evidence before the end of June.

Seventh.—That in case one of the defendant's witnesses shall be under cross-examination at the end of May; or in case one of the complainant's witnesses shall be under cross-examination at the end of June; the taking of the deposition of the witness being cross-examined may continue until it is completed.

Signed in duplicate this twenty-ninth day of April, 1904.

BETTS, BETTS, SHEFFIELD & BETTS,
Solrs. and Counsel for Complainant.
ALBERT H. WALKER,
Counsel for Defendant.

1778

UNITED STATES CIRCUIT COURT,

DISTRICT OF MAINE.

EASTERN PAPER BAG COMPANY

vs.

CONTINENTAL PAPER BAG COMPANY.

DEFENDANT'S REBUTTAL EVIDENCE.

Evidence taken on behalf of the defendant, at the office of Albert H. Walker, Floor 25, Park Row Building, Manhattan, New York, beginning on Monday, May 23rd, 1904, at 11 o'clock in the forenoon, and continuing thereafter by adjournment from time to time; the said evidence being taken before Arthur Brenton Cook, a Notary Public having authority to act as such in Manhattan, New York, and being taken down by Mrs. N. W. Pritchard, a typewriter operator, and being thus taken before said Cook by said typewriter operator in pursuance of the stipulation of the parties, which is prefixed to the complainant's evidence and which was made March 6th, 1902.

Present.—ARTHUR BRENTON COOK, the Notary Public, and SAMUEL R. BETTS, Counsel for Complainant, and ALBERT H. WALKER, Counsel for the Defendant.

WILBUR M. STONE, a witness produced on behalf of the defendant, being first duly sworn by the notary public, testifies as follows, the direct examination being conducted by Mr. Walker:

Q. 1. Are you the same Wilbur M. Stone who gave two depositions in this case on behalf of the defendant in 1903?

A. I am.

Q. 2. Please now to look at "Complainant's Exhibit Operative Model from Liddell Drawing No. 1" and state what you understand that model to represent?

A. I understand that model to represent the mechanism of Liddell Drawing No. 1, with such changes from that drawing, in the contour and proportion of some of its parts, as would enable the edge W of the plate E to co-act with the notch in the cylinder, during at least a portion of the time during which that edge and notch should co-act.

Q. 3. I now turn the crank of the model in an anti-clockwise direction, so as to turn the large gear M^3 (which represents the cylinder C also) in a clockwise direction until the end of the pointer (which represents the edge W of the plate E) reaches coincidence with a definite point or location opposite one of the teeth of the gear M^3; and I ask you to state whatever you have to say upon the question whether a mechanism like that of the model would be operative in such a paper bag machine as that of the Liddell Patent No. 558,969 of April 28th, 1896, in view of the fact that the position of the pointer representing the plate E in the model when the end of that pointer reaches coincidence with a definite point or location on the surface of the cylinder, is a position more nearly radial than tangential to the cylinder, and in view of whatever facts relate to the inquiry? In answering this question you may consult the Liddell Drawing No.

1, and also Defendant's Drawing No. 17, and also any other relevant drawings or documents which have been introduced in evidence in the the case.

A. A mechanism like that of the model would not be operative in such a paper bag machine as that of the Liddell Patent 558,969, in view of the fact that the pointer of the model representing the plate E of the drawing, when the end of that pointer reaches coincidence with a definite point on the surface of the cylinder is a position more nearly radial than tagential to the cylinder, for several reasons. First: When the edge of the pointer of the model representing the edge W of the plate E of the patent, has reached a point of coincidence with the periphery of the cylinder, said pointer has departed so far from the point of tangency, as shown for instance, in Fig. 3 of the patent, that it would be impossible for the upper ply of the mouth of the bag tube or blank to pass over and on to the hook E′ of the plate E. Second: Said pointer has also passed too far beyond said point of tangency to allow of the entrance of the side fingers H H to the side tucks of the bag blank. In the model at the time of the coincidence of the pointer with the periphery of the cylinder, said pointer forms an angle with a line connecting the centre B of the cylinder with the centre *e* about which the pointer turns at the end of arm F of less than 30 degrees, and therefore more than 60 degrees from a line of tangency with the cylinder. In my earlier testimony in this case, I stated in reference to Liddell Drawing No. 1 that any materially more advanced position of the edge W of the plate E in its initial position, than that shown in said Liddell Drawing No. 1 was incompatible with the proper operation of the mechanism, and such an excessive deviation therefrom as that of the model would be entirely incompatible with the proper operation of the machine.

From Defendant's Drawing No. 17 explained at

length in my earlier deposition it may be seen that the edge W of the plate E, therein travels in coincidence with the notch in the periphery of the cylinder from a point about midway between 7 and 8 on the periphery of said cylinder to a point on said periphery just beyond 16 thereon during the clockwise movement of gear M′ on shaft *f*. The operation of the model substantiates the correctness of Defendant's Drawing No. 17, and in no way contradicts that drawing; nor has said model developed any features or facts not shown in said drawing.

Q. 4. I now call your attention to your answer to Q. 8 of your second deposition in this case, and which answer is now printed on pages 810 to 815 of the defendant's record, and which answer explained in minute detail the significance of Defendant's Drawing No. 17; and I ask you to state whether the operation of "Complainant's Exhibit Operative Model From Liddell Drawing No. 1" does corroborate or does contradict that testimony which you gave in reply to Q. 8 of your second deposition?

A. The model very fully corroborates my testimony referred to in the question.

Q. 5. You explained in that testimony that while the edge W of the plate E could be made to move in coincidence with the notch in the periphery of the cylinder through a few degrees of revolution of the cylinder without any backward revolution of the shaft *f;* the edge W of the plate E could not be made to move in coincidence with the notch in the cylinder from the position shown in Defendant's Drawing No. 17 forward as far as the position indicated by the numeral 5 on the periphery of the cylinder C, without a backward turning of the shaft *f* during that movement; but that after the edge W of the plate E had by means of that backward movement of the shaft *f* been caused to turn in coincidence with the notch in the cylinder as far as the location of the figure 5 on

the periphery of the cylinder, the edge W could thereafter be made to move forward in coincidence with the notch of the cylinder by means of the forward or clockwise turning of the shaft *f*. Now I ask you whether the "Complainant's Exhibit Operative Model From Liddell Drawing No. 1" directly proves anything more than the correctness of your testimony relevant to the possibility of causing the edge W of the plate E to turn in coincidence with the notch in the cylinder after that edge and the notch in the cylinder have been otherwise brought into coincidence at about the position shown by the figure 5 on the periphery of the cylinder in Defendant's Drawing No. 17 which is also about the same position that the pointer occupies in the model when the edge or end of the pointer first reaches coincidence with the tooth in the gear M^3 which represents the position of the notch in the cylinder C?

Mr. Betts.—Objected to as leading.

A. Said model does not directly prove anything more than the correctness of my testimony in relation to the travel of the edge W in coincidence with the notch in the periphery of the cylinder from a point between Nos. 5 and 6 on said periphery in Defendant's Drawing No. 17 and forwardly in the direction of the arrow on said cylinder C a certain distance.

Q. 6. Please to state whether, at my request, you went to the Patent Office in Washington, D. C., on May 20th, 1904, and there examined the original application papers in pursuance of which the Liddell Patent No. 558,969 were granted April 28th, 1896, upon an application filed February 6th, 1896, as serial No. 578,291?

A. On May 20th, 1904, I went to the United States Patent Office in Washington, D. C., and made the examination referred to in the question.

Q. 7. Please to enumerate the sheets of paper which you found to constitute those application papers at that

time? And please to particularly set forth what matter you found on those sheets of paper respectively and to what extent that matter was in printer's printing and to what extent it was in typewriting and to what extent it was in pen writing and to what extent it was in pencil writing, if you found it to contain some or all of these kinds of writing.

Mr. Betts.—Objected to, as the original filed papers are the best evidence, and as incompetent and immaterial.

A. I found the application papers at the time of my examination thereof to consist of the total of 13 sheets; the first and last sheets thereof having on the faces respectively thereof press printing and pen writing; the face of these sheets also contained in pencil writing sundry marks and punctuations for the guidance of the compositors. The first page of the application papers is a printed blank filled out with pen and ink; the uppermost line thereof is in pen writing and is as follows: Case "A." Then follows the printed petition, filled in with pen writing, to the Commissioner of Patents and signed in pen writing by Wm. Liddell, and praying that Letters Patent be granted to him for improvement in paper bag machines and appointing Rudolph M. Hunter, of 926 Walnut street, in the City of Philadelphia, State of Pennsylvania, his attorney. The matter on this first page continues and ends with the formal introduction to the specification, which introduction is partly in press printing and partly in pen writing, as follows: "Specification. To all whom it may concern: Be it known that I, William Liddell, of the City of Brooklyn, County of Kings, State of New York, have invented an improvement in paper bag machines of which the following is a specification." The next part of the application papers consists in eleven leaves, each typewritten upon its upper or face side, and having no press printing or pen

writing thereon. Said leaves are numbered upon their faces and at the lower right hand corners thereof 2 to 12 inclusive respectively. Pages 8, 9 and 11 are numbered in pencil only, the balance are numbered in typewriting. Pages Nos. 2 to 11 inclusive are substantially covered with typewriting and page No. 12 is only about half covered with typewriting. In Claim 6, line 3 and in Claim 8, line 3, the correction has been made on the margin of the leaves respectively in green crayon thus: "At?/" and the word "and" in each case in the body of the claim is surrounded by a circle made with a green crayon. There are sundry paragraph and punctuation marks in pencil writing throughout the body of the specification. The first of the eleven typewritten pages (No. 2), commences: "My invention has reference to paper bag machines and it consists of certain improvements which are fully described in," the tenth word "it" is not in typewriting, but has been inserted in pencil; the typewritten matter on those eleven pages closes about the middle of page numbered 12 as follows: "for timing the movements of the movable frame the former plate and the rotating cylinder"; The next and last part of the specification consists in a leaf bearing upon its upper or face side matter in press printing in the nature of a form of attestation, which form is filled in with pen writing. The page begins: "In testimony of which invention I have hereunto set my hand"; this attestation is signed by Wm. Liddell, and is witnessed by R. M. Hunter and Ernest Howard Hunter. This page continues with the oath partly in press printing and partly in pen writing and is signed by Wm. Liddell. The page concludes with the notarial seal of "Ernest H. Hunter, Notary Public, Philadelphia", and the certification signed by Ernest Howard Hunter that the above was "Sworn to and subscribed before me this 7th day of January, 1896." On the back of this back sheet partly in rubber stamp printing and partly in pen writing in red ink is: "Serial

No. 578,291, paper No. ½, Application Filed February 6th, 1896, W. Liddell." Also on the back of said sheet appears the stamp "U. S. Patent Office, Chief Clerk, January 28, 1896." The eleven pages of typewritten matter which begin "My invention has reference to paper bag machines" and end with Claim 8, thus: "the former plate and the rotating cylinder" contain no signature of William Liddell, or of any other person and no initials of any person and no pen writing whatever.

Q. 8. Now please to state how, if at all, the 13 sheets of the application papers were attached together when you examined them on May 20th, 1904?

Mr. Betts.—Same objection as to Q.7.

A. The 11 sheets of typewritten matter were attached between the front sheet which contains the formal introduction and power of attorney, and the back sheet, which contains the oath and notarial seal, by means of a button-headed brass fastener having two prongs projecting rearwardly from the under side of its head, said prongs passed through the 13 sheets and were then folded down in opposite directions against the back of the back sheet; the front and back formal sheets were originally joined at their upper edges and were at some later time separated by means of some comparatively blunt instrument, such as a paper knife, or they may have been torn apart. It is, however, evident that the said sheets were once joined as the indenture of one is the exact complement of the indenture of the other, and said upper edges are bent inwardly respectively toward each other as though they were not only once joined, but as though when so joined they held some bulk of matter between them. The holes in the front and rear formal sheets through which the fastener passes were made with some kind of a cutter or punch which removed a small disk of paper from each sheet; said punch was evidently dull as the edges of the holes are more or less ragged; the holes are about

3/16 of an inch in diameter and register in the two sheets. In each of the two sheets and at about ⅛ of an inch to the left of the punched holes therein is a small hole, such as might have been made with a pin; these holes also register in the two sheets. The 11 sheets of typewritten matter I found in the following condition in respect of fastening. Sheet numbered 2 had the upper left hand corner torn off, leaving no paper for the fastener to engage, and said sheet is pinned near its upper edge to sheet 3. Sheet 5 is torn similarly to sheet 2 and is similarly pinned to sheet 6. Sheets 3 and 4 and 6 to 12 inclusive are each provided with a hole in its upper left hand corner and which holes register fairly well with one another and were apparently made by a punch or cutter and at one time, and a disk of paper removed from each of them. These holes are about 3/16 of an inch in diameter and their edges are somewhat ragged, indicating a dull cutter. The positions of the holes in the typewritten sheets register very closely as to the left hand edge of those sheets, but the positions of the holes vary a maximum of about 1/16 of an inch vertically; also none of the typewritten sheets register with the front and rear formal sheets; the holes in the typewritten sheets are about 3/16 of an inch nearer the left hand edge than in the front and rear formal sheets; also the holes in the typewritten sheets are nearer the top thereof by an average of about 1/16 of an inch than in the front and rear formal sheets. Other than these punched holes in the typewritten sheets I find no other holes of any kind except those occupied by the pins hereinbefore referred to. I find no holes nor nicks in the edge of the typewritten sheets registering with or similar to the pin holes through the front and rear formal sheets, which pin holes are situated about ⅛ of an inch to the left hand of the punched holes in said formal sheets.

Q. 9. Through what holes, if any, was the button-

headed brass fastener located and in position when you began examining those papers on May 20th, 1904?

Mr. Betts.—Same objections as to Q. 7.

A. When I began examining the papers referred to the button-headed brass fastener penetrated through the holes in all the sheets which had holes, to wit: The first formal sheet, typewritten sheets numbered 3 and 4 and 6 to 12 inclusive, and the back formal sheet, and was in position in said sheets.

Q. 10. You have stated that the formal sheets had punched holes and also had pin holes near those punched holes, and you have stated that the typewritten sheets had only punched holes except that two pairs of them were pinned together. Now please to state what holes were occupied by the button-headed fastener when you saw the papers on May 20th, 1904?

Mr. Betts.—Same objections as to Q. 7.

A. The punched holes only.

Q. 11. Other than the punched holes, by means of which and by means of the button-headed fastener therein, all the papers were attached together; what hole or holes, if any, existed through all the papers by means of which they could have been attached together?

Mr. Betts.—Same objections as to Q. 7.

A. No holes other than the punched holes referred to existed in these 13 sheets, whereby they could have been fastened together.

Q. 12. Now confine your attention to sheets 3 and 4 and 6 to 12 inclusive of the typewritten sheets, and state whether those sheets or any of them had any hole whatever except one punched hole near the upper left hand corner of each of those sheets?

Mr. Betts.—Same objections as to Q. 7.

A. Neither all nor any of sheets 3 and 4 and 6 to 12 inclusive, has any hole or holes of any kind in them (ex-

cept two pin holes in sheet 3, which holes were occupied by the pin hereinbefore referred to which attached sheet 2 to said sheet 3 and in sheet 6 two pin holes, which holes were occupied by the other pin hereinbefore referred to which attached sheet 5 to said sheet 6), other than the punched holes.

Q. 13. State what, if anything, you did in the direction of taking those 13 sheets apart and attaching them together again, when you examined them on May 20th, 1904?

Mr. Betts.—Same objections as to Q. 7.

A. I bent together the two prongs of the button-headed brass fastener and pushed them out from the holes in the several sheets occupied by the fastener, and removed the fastener therefrom. I then examined the sheets one by one, separating them from one another to do this. I then piled them together in the same order in which I found them, replaced the brass fastener in the holes therethrough and bent the prongs of the fastener apart and folded said prongs down onto the back of the back formal sheet.

Q. 14. What evidence of any kind was left upon the papers to show or indicate that you had taken them apart and attached them together again?

Mr. Betts.—Same objections as to Q. 7.

A. There was no evidence of any kind left upon the papers to show or indicate that I had taken them apart and attached them together again. The holes in the several sheets were of such size, each and all of them, that the fastener could be removed without mutilating or abrading the edges of the holes or the surface of any of the sheets of paper.

Q. 15. What was evidently the fact in respect of those 13 sheets, and upon the question whether they had ever been permanently fastened together on the one

hand, or whether on the other hand they were and always had been attached together removably, so that they could be taken apart and put together at will without leaving any evidence of the transaction?

Mr. Betts.—Same objections as to Q. 7.

A. It was evidently the fact that they had always been attached together removably, so that they could be taken apart and put together at any time without leaving any evidence of such manipulation.

Adjourned to Friday, June 10th, 1904, at 11 o'clock in the forenoon; and the defendant's time for taking testimony in rebuttal in accordance with the stipulation of April 29th, 1904, is hereby extended by agreement of the parties until June 17th, 1904.

FRIDAY, June 10th, 1904,
11 o'clock, A. M.

Met pursuant to adjournment.

Q. 16. I call your attention again to "Complainant's Exhibit Operative Model from Liddell Drawing No. 1" and I ask you to observe me while I am moving the crank of that model in an anti-clockwise direction so as to move the large gear in a clockwise direction from the position where the end of the pointer first reaches coincidence with the periphery of the gear to the position where the end of the pointer departs from the periphery of the gear; and I call your attention to the fact that that departure takes a course nearly radial to the gear and almost directly away therefrom for about an inch of distance and continues away from the periphery of the gear through a curved course much more nearly radial to the gear than tangential to the

gear. Now please to assume that the pointer represents such a tucker plate as the tucker plate E of the Liddell patent 558,969 and state what effect in a paper bag machine in conformity to "Complainant's Exhibit Operative Model from Liddell Drawing No. 1" (as far as that model shows any mechanism) would result from such a radial departure of the edge of the tucker plate from the periphery of the cylinder as that which you observe in respect of the departure of the edge of the pointer of the model from the periphery of the large gear, when that pointer does depart from the periphery of that gear after having turned for a few degrees in coincidence therewith?

A. In a paper bag machine, such as that set forth in the Liddell patent 558,969, the departure of the edge W of the plate E at the end of its coaction with a notch or given line in the periphery of the cylinder C in a direction radial to that cylinder like the direction of departure of the pointer in the model "Complainant's Exhibit Model from Liddell Drawing No. 1" from the periphery of the large gear thereof would result in the practical undoing of the work already performed, or in the destruction of the partly folded bag blank. The edge W of the tucker plate E at the time of its departure from coaction with the cylinder C lies between the rear flap portion of the diamond blank and the body of the bag blank upon the periphery of said cylinder C; therefore the radial departure of the edge W of the tucker plate from the periphery of the cylinder would cause it to force outwardly said rear flap portion and to turn said portion forwardly toward the front flap portion thereof, thereby distorting or destroying the partially folded diamond fold. Furthermore if the speed of said radial departure was at all approaching commercial requirements, it would be impossible for the bag blank to escape from in front of it before being mutilated or torn.

Q. 17. Would it be possible to so change the propor-

tions of some or all of the parts of "Complainant's Exhibit Operative Model from Liddell Drawing No. 1" as to cause the edge of the pointer to depart tangentially from coincidence with the large gear, or as to cause the edge of the pointer to remain stationary at the location where it does depart from the periphery of the large gear, while the point on the periphery of that gear with which it had been turning in coincidence would depart tangentially from the edge of the pointer?

A. It would not be possible.

Cross examination by Mr. Betts:

X-Q. 18. Referring to your answer to Q. 2 of this deposition, where you say that you understand that "Complainant's Exhibit Operative Model from Liddell Drawing No. 1" represents the mechanism of Liddell Drawing No. 1" with "such changes from that drawing, etc.," state what you understand such changes to have been?

A. I have not compared "Complainant's Exhibit Operative Model from Liddell Drawing No. 1" in all its details with "Liddell Drawing No. 1", but I note the following changes in that model from that drawing. There are in said model additional parts not found in said drawing as follows: A small gear which is attached to a crank and handle, said gear meshing with the large gear of the model, and a pivot bolt on which said gear turns; a spring attached to the arm represented by F′ in the drawing, said spring being also attached to the back-board on which the model is erected, for the purpose of maintaining the contact of the roll at the end of said arm F′ with the periphery of the cam K′ of the drawing. I find the following parts shown in the "Liddell Drawing No. 1" absent in "Complainant's Exhibit Operative Model from Liddell Drawing No. 1": The front clip E′ on the tucker plate E; side clip H also on the tucker plate; side clip G on the cylinder C and front clip *c* on cylinder C; also the cylinder C of the drawing is absent in the model, and

the cylinder L′ on shaft L. I notice the following changes in contour and proportion in the model, from the drawing: The elliptic gears K and K² have much greater throw in the model than in the drawing; also the contour of cam K′ in the model varies materially from the cam of the drawing. Other than these noted variations I observe no others except minor ones.

X-Q. 19. Well, which of the above changes mentioned by you come under the designation of your answer 2 as "such changes from that drawing in the contour and proportion of some of its parts as would enable the edge W of the plate E to coact with the notch in the cylinder during at least a portion of the time during which that edge and notch should coact"?

A. Changes that come under the designation mentioned in the question are those of the elliptic gears K and K² and the contour of cam K′.

X-Q. 20. Is there anything more in those changes referred to in your last answer than the work of a person skilled in the art to make from the "Liddell Drawing No. 1" a model in which as you say in answer 2 "the edge W of the plate E to (will) coact with the notch in the cylinder during at least a portion of the time during which that edge and notch should coact"?

A. There is nothing more in those changes than would be within the ability of a person skilled in the art, to make.

X-Q. 21. As I understand your direct testimony it is or is intended to be to the effect that the model "Complainant's Exhibit Operative Model from Liddell Drawing No. 1" illustrates not an operative but an inoperative construction as applicable to a paper bag machine; what is the least change you can suggest in the mechanism illustrated in that model which would make it operative in your judgment, instead of being inoperative in your judgment, as you now suggest it is?

A. The least change that I would suggest in the me-

chanism of the model to make it operative for the purposes intended in a paper bag machine would be to supply means to cause the edge of the pointer of the model to start its coaction with the periphery of the large gear from a point where that pointer was substantially tangential to the periphery of said gear and to cause the edge of said pointer to coact with a point in the periphery of said gear until said pointer had reached a point radial to said gear and continue onward until it had reached a position approximately tangent to the gear; also means should be provided to cause the pointer to leave the surface or periphery of the gear in a direction at least more nearly tangential than radial.

X-Q. 22. What means would you suggest to carry out the least change in the mechanism of the model to make it operative as set forth in your answer 21?

A. I have no suggestions to make by way of providing means to make the model operative; it would in my judgment require very material changes, probably including the removal of some parts and the substitution of others, and probably the addition of other parts to accomplish the desired result.

X-Q. 23. You say "probably"; are you guessing; do you know, or don't you know?

A. I have not devised means for such result, but means along the general lines of those shown in the Liddell patent 558,969 could be made to accomplish the desired results.

X-Q. 24. Have you ever designed any paper bag machinery either operative or inoperative?

A. I have not.

X-Q. 25. Have you ever tried to make any paper bag machinery operative which you considered inoperative, as presented to you?

A. I have not.

X-Q. 26. Have you ever practically tried to make

what is shown in the Liddell Drawing No. 1 into an operative machine with the least possible change?

A. I have not.

X-Q. 27. Have you ever tried to make what is shown in the "Liddell Drawing No. 1" into an operative model, mechanism or machine?

A. I have not.

X-Q. 28. Have you had any experience whatever in building paper bag machinery, or in altering paper bag machinery practically?

A. None in the actual building or altering of paper bag machinery, but I have had some experience in the directing and supervising of alterations therein.

X-Q. 29. Have you ever tried or seen tried a mechanism like that of the model in "Complainant's Exhibit Operative Model from Liddell Drawing No. 1" embodied in a machine designed to be a working machine and to ascertain whether or not it would be operative?

A. I have not.

X-Q. 30. Then your testimony as to inoperativeness of a mechanism made in accordance with that model is based on theory and opinion merely, is it?

A. It is not. It is based on an extended knowledge and observation of machinery for performing the functions that a machine built in accordance with "Complainant's Exhibit Operative Model from Liddell Drawing No. 1" is intended to perform, and from my extensive knowledge of the requirements in such cases.

X-Q. 31. But it is not a practical experience with reference to this particular problem, nor an effort to solve it practically, is it?

A. It is not.

X-Q. 32. You give as your first reason in answer 3 for the inoperativeness in a paper bag machine of a mechanism like that of the model referred to, that when the edge W of the plate E of the patent reaches the

cylinder the angle of the plate with the cylinder has departed so far from the angle shown in the patent that it would not be possible for the mouth of the bag tube to pass over and on to the hook E′. Did you ever make any experiment to determine what length of the hook E′ would obviate this difficulty and objection?

A. I have not, as I do not consider that the lack of operativeness resides in the length or lack of length of the hook E′.

X-Q. 33. But as I read your answer you gave as your first reason for inoperativeness "that it would be impossible for the upper ply of the mouth of the bag tube or blank to pass over and on to the hook E′ of the plate E." Have you ever tried the effect of making the hook E′ longer?

A. Not in connection with this model or this individual problem.

X-Q. 34. It would not involve any exercise of invention to make the hook E′ longer, would it?

A. It would not.

X-Q. 35. What enables you to state as you do in this first objection to operativeness that it would be impossible for the upper ply of the bag tube or blank to pass over and on to the hook E′ of the plate E in view of the fact that said hook E′ can be made shorter or longer without the exercise of invention?

Mr. Walker.—This question is objected to as ambiguous because it does not state or imply whether the length referred to is the length of the shank of the hook or is the length of the hook proper. And if the question is intended to refer to the length of the hook proper and not to the length of the shank of the hook the question is objected to as immaterial. But if the question refers to the length of the shank of the hook the

question is not objected to, provided that reference be made plain in the question.

A. In answer to X-Q. 32 I stated that I did not consider the lack of operativeness resided in the length or lack of length of the hook E′, and it therefore seems immaterial to me whether the hook is shortened or lengthened.

X-Q. 36. Consider that the lengthening of the hook E′ means the extending of that hook or any part thereof in such way as to make it more effective than the actual hook E′ shown in the drawing with reference to the upper ply of the mouth of bag tube; is your first objection as to operativeness entirely independent of any adjustment or change or lengthening of or in the hook E′?

A. I do not see how the lengthening of the hook E′ or any adjustment or change in it or any part of it would remove the cause of the first objection in my answer to Q. 3.

X-Q. 37. In other words in any adjustment of the hook E′ that you can mechanically suggest it is your opinion that the structure of the model referred to is such that it would be impossible for the upper ply of the mouth of the bag tube or blank to pass over and on to the hook E′ of the plate E?

A. In my answer to X-Q. 36. I have somewhat over stated my meaning, in that I believe the hook E′ could be so lengthened as to allow the upper ply of the mouth of the bag blank to pass over it, but I believe that a hook so proportioned and positioned as to accomplish this result would be inefficient to perform the other functions for which that hook is provided.

X-Q. 38. What other functions and why would such a proportioned hook be inefficient to perform them?

A. The other functions of such a hook are to press and hold the upper ply of the bag blank against or near the tucker plate E, and thus enable the side fingers

H H to properly enter the side tucks respectively of the bag blank. The necessarily distant position of the hook E′ from the face of the tucker plate E to enable said hook to enter the mouth of the bag blank would render it inefficient to perform these other functions.

X-Q. 39. Is there no mechanical suggestion occurring to you by which this last difficulty could be obviated, and the hook still have length enough to catch the mouth of the bag tube and yet be so adjusted as to press and hold the upper ply of the bag blank against or near the tucker plate E at the proper time?

A. It would obviously be possible to hinge the hook F′ as shown in "Liddell Drawing No. 1", and thereby enable said hook both to enter the mouth of the bag blank and to clamp or press the upper ply thereof against the tucker plate, but by the time it could so clamp the bag blank said tucker plate would have approached so near to a radial line with the periphery of the cylinder as to distend the side tucks of the bag blank so much that it would be difficult if not impossible for the side fingers H H to enter therein respectively.

Adjourned until Saturday, June 11th, 1904, at 11 o'clock A. M.

SATURDAY, June 11th, 1904,
11 o'clock A. M.

Met pursuant to adjournment.

X-Q. 40. Can you suggest in connection with this Complainant's model any change of position of the pointer thereon which represents the edge W of the plate E of the patent which will obviate or tend to obviate the first and second objections as to operativeness you have stated?

A. By moving the pointer of the model to a position tangent to a circle about the centre to which the pointer is now radial might give some superficial advantage, but whatever was gained at the commencement of the co-action of the pointer and gear would be lost at the close of that co-action.

X-Q. 41. What do you mean by superficial advantage in the last answer; why would it not be a real, practical advantage in operativeness?

A. I think the latter part of my answer to X-Q. 40 attends to this matter in that although there would be some advantage at the commencement of the stroke the price paid for it at the end of the stroke would offset that advantage.

X-Q. 42. Have you ever made trial of this matter practically on the model referred to, or any other model, to see what the working would be.

A. I have made practical trial of this matter on "Complainant's Exhibit Model from Liddell Drawing No. 1" to the extent of holding a piece of paper on the gear represented by N in Liddell Drawing No. 1, in a position similar to that referred to in my answer to X-Q. 40.

X-Q. 43. State exactly where and how you held the piece of paper, and what was its length, and what happened in your observation of that experiment?

A. I cannot state just how long the paper was or just where I held it, but I held it so the end of the paper would coincide with the point of the pointer and the edge of the paper representing the face and the side of the pointer reaching backward therefrom and across the gear at a point between its centre and periphery. This new position of the pointer was more nearly tangential to the large gear than the position of the metal pointer of the model, and my observation was that in that position it would be more efficient at the beginning of the co-action

with the cylinder or large gear, but that when it swung over to its position of leaving the large gear it was then so near radial to that large gear that it would be inefficient to perform the latter part of its functions, even though it might have performed the earlier parts thereof.

X-Q. 44. This change of pointer, as you have described in connection with your paper pointer experiment, involved nothing more than mere mechanical adjustment, did it?

A. That is all.

X-Q. 45. You never tried the effect of an actual plate corresponding to the paper pointer of your experiment, and with reference to what it would actually do in the making of paper bags, in the latter part of its functions, did you?

A. I never have.

X-Q. 46. Would you testify that there must be an absolute, single and invariable line which must be followed by the edge of the pointer of the model as representing the edge W of the plate E of the patent, which single, absolute line will be alone the only operative path for the edge of the plate; and any and all other lines of the edge of that path will be inoperative.

A. No; but no material deviation from such absolute and invariable line by the point or edge of the pointer would be compatible with the production of perfect bags, as any tendency of the edge W of the tucker plate or pointer to deviate from co-action with such invariable line tends to produce inequalities in the product and inaccuracies in the diamond fold.

X-Q. 47. Are you able in connection with the model referred to to point out what should be the invariable line of perfect operativeness of production?

A. It is impossible for me to point out such a line on the model in view of the fact that such line is inter-

dependent upon the motion of the large gear and the edge of the pointer; and in the model the edge of the pointer fluctuates considerably during its period of co-action with the cylinder and in reference to any line thereon.

X-Q. 48. Can you not state in words and in connection with the model where such line of operativeness would or ought to run?

A. Such a line of operativeness might be concentric with the periphery of the large gear and coincident with the pitch line, thereof, for instance, and would preferably be so.

X-Q. 49. Are you able to state how much of variation from the fixed line of suggested perfect operativeness you have designated for the edge of the plate would still permit of practical or commercial operativeness in a machine?

A. It would be difficult, if not impossible, to set limits to such variation, in that in commercial production there are a large variety of collateral influences that bear upon the subject; and the limits within which the mechanism would be operable in one instance would be too far apart for operability in other instances.

X-Q. 50. Then as I understand you there is a fixed or ideal line of best or perfect operativeness for the edge of the plate varying however with different practical conditions of bag making, and which may be departed from within limits, and the structure still be operative commercially?

A. With a folding bed such as shown in "Liddell Drawing No. 1" there is an ideal line of travel for the edge of the tucker plate in co-action therewith to form the diamond fold of bag blank, also this line may vary slightly within operativeness under varying commercial conditions.

X-Q. 51. Trace for me or describe to me this alleged ideal line of operativeness and trace for me or describe to me in this connection the limits you think this ideal

line can be varied from, without departing from the limits of operativeness.

A. I do not find anything to state in answer to this question in addition to the matter presented in my answers to X-Q. 48 and 49.

X-Q. 52. Then as I understand you you are unable to definitely or accurately define the ideal or perfect line of operativeness, and you are unable to state how much it can be varied from and the structure still be operative all in connection with this Liddell drawing No. 1 and the model referred to?

A. The ideal line of operativeness I consider the one stated in my answer to X-Q. 48, but it is impossible to set limits of operable variation therefor.

X-Q. 53. If you designed a paper bag machine and planned out what you considered the perfect or ideal line of operativeness for the edge of the plate to follow in connection with the other parts, and when it was built you found that in practical working this particular mechanism did not operate as desired or required, would not the designer and mechanic in practice vary this ideal line in connection with changes of the general mechanism to insure better practical results?

A. No; the designer and mechanic might vary this ideal line by minor modifications in the existing parts of the machine, but to change the general mechanism thereof would be a matter for the inventor thereof to direct or make.

X-Q. 54. You avoid my question by giving the words general mechanism a much wider scope than I intended they should have. Please answer it limiting the change of mechanism to that closely or strictly affecting the line of travel of the plate and relations of its edge to the cylinder.

Mr. alker.—This question is objected to as altogether too indefinite, even when taken in connection with the context to be understood with any

certainty that the hearer is following the meaning of the question.

A. The relations referred to are of maximum importance, and in so far as improvements to change those relations were of minor character in existing parts it would be a matter for the attention of the designer or mechanic, but if these changes were in the general mechanism such changes would be beyond the province of the designer or mechanic to make.

Adjourned until Monday, June 13th, 1904, at 11 o'clock in the forenoon.

MONDAY, June 13th, 1904,
11 o'clock, A. M.

Met pursuant to adjournment.

X-Q. 55. Do you know anything as to modifications or changes made in the line of travel of the edge of the plate of the paper bag machines of defendant in this case at their Rumford Falls factory, such change being from the original construction as delivered and in order to make said machines operative or more operative?

Mr. Walker.—Objected to as not cross-examination, but as being an intent to investigate the doings of the defendant in paper bag machinery since the time the complainant's evidence in chief was taken, and having no connection whatever with the direct examination of the present deposition.

A. I do not.

X-Q. 56. As a person more or less skilled in connection with paper bag machinery would it be in your opinion remarkable or unusual that paper bag machines of the defendant or any other company, after being manufac-

tured and delivered and set up, should have the line of travel of the edge of the plate referred to somewhat modified or changed in order to attain better practical results in operation?

A. It would not in my opinion be remarkable or unusual that minor changes should be made under the circumstances noted in the question, but it would in my opinion both be remarkable and unusual that any material changes should be made under such circumstances, as the line of travel of the edge of the plate is a feature of much importance in a paper bag machine, and which feature would be carefully and accurately attended to in the building of such machine.

X-Q. 57. Is it not substantially true that with reference to the edge of forming plate and its relations to the revolving cylinder of paper bag machines of the character we are considering, there is not an absolute, defined and necessarily fixed line through which the edge of the plate must inevitably travel to make the mechanism operative, but that the mechanism will be operative within a fixed or limited zone or space of travel, as distinguished from a mere line, and within which limited zone different paths of travel or of contact of the edge of the plate with the edge of the cylinder can operatively be made?

Mr. Walker.—Objected to as having no relevancy to the direct examination, which examination in respect of this subject is confined to two points, and which points do not include any question relevant to variation from exact coincidence between the edge of the tucker plate and the periphery of the cylinder during the few degrees of revolution in which the edge of the tucker plate and a definite line across the periphery of the cylinder do approximately coincide in "Complainant's Exhibit Operative Model from Liddell Drawing No. 1."

A. The converse of the earlier part of the question

is true as it is substantially true that there is an absolute, defined and necessarily fixed line through which the edge of the plate must travel, but that the mechanism will be operative within a limited but not fixed zone; and furthermore it is true that the limits of this zone are narrow.

X-Q. 58. Referring to the "Complainant's Exhibit Operative Model from Liddell Drawing No. 1," is it not open to a mechanic to vary somewhat the size of the cylinder in connection with an effort or adjustment to make the model operative if it now is not?

A. No; a mechanic would immediately get into trouble in making changes in the diameter of the cylinder, as it would disarrange and throw out of time other parts co-acting with the cylinder.

X-Q. 59. My supposition was that this variation of size of cylinder in connection with the other adjustments should act to make the mechanism operative or more operative, not inoperative, as you presume in your answer. Would there be any more than the work of a mechanic in varying the size of the cylinder in such a connection, I mean of one skilled in this art?

A. A slight variation in the diameter of the cylinder could be made by a mechanic skilled in the art, but any material variation would lead him into difficulties that it would be impossible for him to surmount.

X-Q. 60. I now remove from the model from Liddell Drawing No. 1 referred to the pointer of that model which you refer to in your answer 3 of this deposition as representing the plate E of the patent, and which represents the plate E of Liddell Drawing No. 1. This removal is effected merely by unscrewing the two screws which attach it by screw adjustment to the gear wheel N. I substitute therefor another pointer by screwing it to said gear wheel N with the same screws in the same screw holes, and I ask you to examine the model as so changed or readjusted and to state whether any advance or improvement has been made therein in respect to

1806

operativeness in connection with the relations between the edge W of the plate E of the Liddell Patent and Liddell Drawing No. 1, and the revolving cylinder C?

Defendant's counsel objects to the proposed change being made in the model because the model is in evidence in its present condition, and therefore ought not to be changed in any way, inasmuch as such change would constitute tampering with evidence.

Assuming the change to be made by complainant's counsel notwithstanding this objection; the question is objected to because it has no connection with the direct examination of this deposition but constitutes an attempt to prove new matter by the present expert witness, and which new matter if admissible at all in this case could only be proved when the complainant was taking its testimony in reply to the defendant's evidence in chief.

In explanation of this objection defendant's counsel states that "Complainant's Exhibit Operative Model from Liddell Drawing No. 1" was put in evidence at the proper time by the complainant for the purpose of trying to prove that a machine made in accordance with Liddell Drawing No. 1 would be operative; but that the defendant in the present deposition has taken evidence to show that "Complainant's Exhibit Operative Model from Liddell Drawing No. 1" really proves the contrary of what the complainant tried to prove by its introduction; and that the present question is objectionable because it seeks at this time to introduce into the case a different model from "Complainant's Exhibit Operative Model from Liddell Drawing No. 1" and to prove the character of that different model by the defendant's expert at a

time when the complainant has no right to take evidence of any kind, and particularly has no right to reopen its case and take evidence which, if proper at all, was proper only at an earlier stage of the case.

Complainant's counsel states that the pointer now on the model referred to will be replaced thereon in the presence of defendant's counsel so as to put the model in exactly the same condition as it now is, and that the other pointer referred to will be offered in evidence in the case, so that there will be no room for criticism as to "tampering with evidence."

A. The substitution of the new pointer for the old in "Complainant's Exhibit Operative Model from Liddell Drawing No. 1", has caused a slight improvement toward operativeness at the commencement of the co-action of the pointer and the cylinder, but this slight improvement has been gained at the expense of a corresponding decrease in operativeness at the end of said co-action. This improvement and retrogression has reference however more to the face of the pointer corresponding to that face of the tucker plate E of "Liddell Drawing No. 1" to which the side fingers HH are attached, than to the edge W mentioned in the question.

X-Q. 61. Please define what you mean in your last answer by the words "slight improvement toward operativeness" at the commencemnt of the co-action of the pointer and the cylinder?

A. I meant that, as the edge of the new pointer approaches nearer to tangency to the cylinder at the commencement of its co-action therewith than the original pointer did, there would be more probability of said pointer operating as it should do.

X-Q. 62. Considering the amount of tangency shown by this second pointer now on the model in connection

with a lengthening or proportioning of the hook E′ of the plate E, such as you have previously testified was within the ability of a mechanic skilled in the art, would you not admit that a structure might result in which the upper ply of the mouth of the bag tube or blank would operatively pass over and on to the hook E′ of the plate E?

A. There is no "tangency" shown by this second pointer now on the model, said pointer deviating in its relation to the cylinder, from the approximately radial position of the old pointer only a slight amount *toward* tangency; and this slight amount of improvement in position at the commencement of co-action of the pointer with the cylinder would not be sufficient to enable said pointer to "operate as it should." I believe that a hook E′ could be so proportioned and disposed, particularly if hinged and made to swing at a proper time on such hinge, and applied to either the old or the new pointer of the model, so that it would be possible for the upper ply of the mouth of the bag blank to pass over it, as stated in my answer to X-Q. 37 in reference to the old hook. But this while contributing a superficial advantage would not enable the pointer or plate E to operate as it should do.

X-Q. 63. Would you testify that in a paper bag machine in order that it may be operative the forming plate, which is the plate of which we are speaking, must be tangential to the revolving cylinder at the point on said cylinder where said plate most nearly approaches it in the operation of the machine, in order that such paper bag machine shall be operative?

A. Not absolutely tangential, but as I have testified a number of times before in this suit, any material deviation from such tangential position is incompatible with operativeness.

X-Q. 64. Well, what do you mean by absolutely tan-

gential; if a plate or line is not tangential to a cylinder, what is it in terms?

A. I realize that tangential is an absolute term, and use the qualifying word for the sake of clearness or emphasis. If the line or plate is not tangential to a given circle or cylinder it might be approximately so or tangent to a greater or smaller cylinder coaxial with the given cylinder.

X-Q. 65. Then as I understand you a paper bag machine can be operative when its forming plate is not tangential to the revolving cylinder at their first point of approach?

A. Speaking in absolute terms, yes.

X-Q. 66. Now if the forming plate of the machine is not tangential to the cylinder thereof at their first point of approach, what is it, what relation does the plate bear to the cylinder?

A. The face of the plate might be tangent to a circle of greater or less diameter than the diameter of the cylinder.

X-Q. 67. Now please confine yourself to the cylinder in question; if the plate is not tangential to that cylinder at their first point of approach, what is it other than tangential, express the relation.

A. It would form an angle with such tangent to the cylinder.

X-Q. 68. Would you say in order that a paper bag machine shall be operative the forming plate must be tangential to the revolving cylinder at the point where it leaves that cylinder after having completed its course of nearest contact thereto?

A. It need not be absolutely or fully tangential, but to be properly operative it should be approximately tangential at its time of completing its course of nearest contact to the cylinder.

X-Q. 69. How are you able to define the practical

limits for an operative machine of what you term "approximately tangential"?

A. It would be impossible to set definite limits for this approximate tangentiality; such limits would be governed by a variety of circumstances and the details of the machine construction, just as the variations within operativeness at the commencement of the co-action of the tucker plate and cylinder would fluctuate, and be governed.

X-Q. 70. Please examine the Walker model room machine about which you have testified in this case, and look at that machine as operated by turning the crank thereof, and state what are the relations between the forming plate and the revolving cylinder thereof at the points of nearest contact, both in the approach of the plate to the cylinder and the departure of the cylinder therefrom, and particularly whether the plate at such points is radial to the cylinder or tangential to the cylinder, or to which position is it nearest?

Mr. Walker.—This question is objected to as immaterial; the material question being the relation of the plate to the cylinder at the time they begin to co-operate, and at the time when they cease to co-operate, and not the intermediate time when the edge of the plate happens to be nearest to the cylinder in the case of the "Complainant's Exhibit Operative Model from Liddell Drawing No. 1"; and that question not receiving any light from the relations between the forming plate and the folding bed of the Walker model room machine when the edge of the forming plate approaches nearest to that folding bed; and the question being thus immaterial even if it applied to "Complainant's Exhibit Operative Model from Liddell Drawing No. 1", and being doubly immaterial on account of its being confined to the Walker model room machine.

A. In the Walker model room machine the forming plate has no relation to the cylinder of that machine in that the forming plate co-acts with a folding bed pivoted to said cylinder but having movements of its own thereon, and its construction and mode of operation are materially different from the mode of operation of a tucker plate on the periphery of a revolving cylinder.

X-Q. 71. Even supposing what you say is the fact the folding bed you refer to is attached to, or some part of the cylinder, and with this understanding please answer my last question.

— *Mr. Walker.*—This question is objected to as immaterial, because this deposition is devoted to an exposition of the essential character of "Complainant's Exhibit Operative Model from Liddell Drawing No. 1", and because that question can receive no light from testimony as to the peculiarities of the Walker model room machine, which, as the witness has just testified is materially different in construction and mode of operation from what "Complainant's Exhibit Operative Model from Liddell Drawing No. 1" represents.

A. In the Walker model room machine the relation of nearest contact between the edge of the forming plate and the folding bed is one of brief duration, and occurs from the time that forming plate approaches a radial position to the folding bed, while it turns through that radial position and until a short distance beyond said radial position; and such position of nearest contact bears no relation to the approach of the plate to the folding bed in co-action therewith or to its departure therefrom.

X-Q. 72. Does the fact that the forming plate in the Walker model room machine has a position radial to the folding bed, which latter forms a part of the cylinder in

that machine, and occupies that radial position during a portion of the time that the cylinder and plate are in operative or co-acting relations, render that machine inoperative?

Mr. Walker.—This question is objected to because it recites, as if it were true, that the folding bed of the Walker model room machine forms a part of the cylinder in that machine; and also recites as if it were true that the cylinder and the forming plate of that machine are sometimes in operative or co-acting relations; whereas those recitals are contrary to the fact and to the evidence. If Mr. Betts will confine his question to its interrogating part without those impertinent recitals the question will not be objected to.

Complainant's counsel objects to the objection as very leading.

A. The folding bed in the Walker model room machine does not form a part of the cylinder of that machine, neither does the forming plate and the cylinder of that machine co-act, but the fact that the forming plate in that machine has at some time a radial position to the folding bed during its co-action therewith does not render that machine inoperative.

X-Q. 73. In your third answer of this deposition you speak of "any material and more advanced position of the edge W of the plate E in its initial position, than that shown in said Liddell Drawing No. 1". What do you mean by "more advanced position" of the edge W?

A. By "more advanced" I mean a position farther on in the direction of the rotation of the cylinder, as this would cause the arm F carrying the plate E to swing upward on the shaft *f*, thus causing a great angular opening between the face of said plate and a tangent to the cylinder at the point of the notch therein as shown in Liddell Drawing No. 1, for instance.

X-Q. 74. In your opinion does Liddell Drawing No. 1 represent an operative structure so far as the question of the plate E being tangential to the cylinder C at or about the point where it comes into operative relations with said cylinder?

Mr. Walker.—This question is objected to as ambiguous and likely to mislead whoever compares it with the answer which may be given thereto.

A. In my opinion as far as the relation of the plate E to the cylinder C as shown in Liddell Drawing No. 1 is concerned, said plate and cylinder would operatively co-act at the point of co-action shown in said drawing.

X-Q. 75. Where would the inoperativeness begin, if anywhere, on the structure of Liddell Drawing No. 1, in respect to the relations of the plate E and cylinder C?

A. Any inoperativeness between the plate E and the cylinder C in Liddell Drawing No. 1 would commence when the mechanism of said drawing failed to cause the plate and cylinder to properly co-act.

X-Q. 76. That is probably true, but when and where would that be, pointed out on the drawing, Liddell Drawing No. 1?

A. It is not evident on the face of that drawing where such difficulties would occur, and it would be necessary to plot the kinematics of that drawing to show the path of the edge W of the plate E therein in connection with the revolution of the cylinder.

Adjourned to June 14th, 1904, at 11 o'clock.

TUESDAY, June 14, 1904,
11 o'clock, A. M.

Met pursuant to adjournment.

X-Q. 77. If it is not evident on the face of Liddell Drawing No. 1 where such difficulties would occur as would render the structure of that drawing inoperative in respect to the relations between the plate E and the cylinder C, how are you able to state that there would be such inoperativeness.

Mr. Walker.—This question is objected to as not cross examination, and as referring to a subject which was explained more than a year ago by the present witness in his elaborate answer to Q. 8 of his second deposition, and which answer is now printed on pages 810 to 815 inclusive of the defendant's record.

A. I have the knowledge of such inoperativeness in the structure of the machine shown in Liddell Drawing No. 1 from a careful investigation of that drawing.

X-Q. 78. Did you ever try to make an operative machine or model conforming to the Liddell Drawing No. 1, but changing what is shown therein with an effort to make the structure operative with the least possible amount of change?

A. I have not.

Re-direct examination by Mr. Walker:

R-D-Q. 79. I call your attention to the fact that X-Q. 74 was objected to as ambiguous and likely to mislead whoever compared it with the answer which might be given thereto, and I call your attention to the answer which you did afterward give to that question, and I ask you to state under what circumstances the plate E and the cylinder C of Liddell Drawing No. 1 would operatively co-act and begin so to do at the position shown in that drawing?

Mr. Betts.—Objected to as leading and suggestive, answer 74 being clear in its statement.

A. The plate E and the cylinder C of Liddell Drawing No. 1 would operatively co-act and begin so to do at the position shown in the drawing *only* when a bag blank was held by the lower ply of the mouth thereof by the front clip *c* to the cylinder and when the lower plies of the side tucks of the said blank were held to the face of the cylinder by side fingers G G respectively and when the upper ply of the mouth of said blank was held to the under side of the tucker plate E by the front finger E′ and when the upper plies of the said tucks of said blank were held by side fingers H H respectively to said face of tucker plate E; and *only* when the mechanism of said drawing would cause the plate E to commence to turn about its edge W backwardly in an anti-clockwise direction with the said edge W in substantial coincidence with the notch in the cylinder under that edge as shown in Liddell Drawing No. 1.

R-D-Q. 80. You elaborately testified in response to Q. 8 of your second deposition that the machine of Liddell Drawing No. 1 is inoperative and useless to open out the forward end of a tucked paper tube, and fold the same down into a diamond form; because the mechanism of that drawing cannot cause the plate E and the cylinder C to operatively co-act at the point of co-action shown in that drawing, nor forward from that point of action during the first stage of the necessary movement of the plate E and the cylinder C. When the complainant's counsel propounded X-Q. 74 I saw at once that it was ambiguous in that it might be thought to inquire whether in Liddell Drawing No. 1 the plate E is shown at a proper tangential position to the cylinder C for the beginning of the co-action of the two parts on the one hand; or on the other hand, it might be thought to inquire whether the Liddell drawing No. 1 represents an operative structure which, when operating, will cause the plate E and

the cylinder C to properly co-operate, beginning at their relative positions as shown in that drawing. Now as I interpret your answer to X-Q. 74 it was based upon your understanding that the question had the first of these meanings and did not have the second of these meanings, and I think that that construction of that question is probably what the cross examiner meant to express, and probably what would result from a laborious analysis of the language employed by the cross examiner in connection with the context; but I fear that complainant's counsel on the argument will take the ground that X-Q. 74 meant to inquire of you whether Liddell Drawing No. 1 represents an operative structure, and that your answer to that question was substantially an answer in the affirmative. Now to guard against any possible misunderstanding of your evidence on this subject, I will ask you to state whether you still adhere to the evidence which you gave in your second deposition in reply to Q. 8 on the one hand, or whether on the other hand, since giving that evidence, you have arrived at a contrary opinion, and now think that the Liddell Drawing No. 1 does represent an operative structure.

Mr. Betts.—Objected to as very leading and suggestive to the witness.

Mr. Walker states to the Court that the last question is thought by him to be in strict accordance with the law of evidence, it being one of the rules of that law, that where a witness on cross-examination uses language which may be claimed to be contrary to his direct testimony, it is proper on re-direct examination to call his attention to the hypothetical discrepancy, and ask the witness to state what he means his testimony to be, upon the point inquired of.

A. I do entirely adhere to the evidence which I gave in my second deposition in reply to Q. 8. thereof

in that I regard the inoperativeness of the mechanism of Liddell Drawing No. 1 as a matter of fact and not a matter of opinion; and my answer to X-Q. 74. had reference only to the instantaneous position shown in Liddell Drawing No. 1, and I again plainly stated in my answer to X-Q. 77 as to my knowledge of the inoperativeness of the machine of Liddell Drawing No. 1.

R-D-Q. 81. Now please to state what meaning precisely you intended to express in your answer to X-Q. 74?

Mr. Betts.—Objected to as the answer is plain and as leading and suggestive.

Mr. Walker.—Inasmuch as complainant's counsel has asserted on the record that the answer to X-Q. 74 is plain; defendant's counsel asserts that that answer is ambiguous when taken in connection with the ambiguous question to which it was made in reply. And Mr. Walker states to the Court that he believes that counsel on both sides really understand this subject alike, and that the whole confusion has arisen from the original ambiguity of X-Q. 74.

A. The meaning that I intended to express in my answer to X-Q. 74 was that if the plate E could be by any means moved to the position shown in Liddell Drawing No. 1 and by any means moved from that position *in co-action with the notch in the cylinder*, which I have testified at length it would be impossible for the mechanism of that drawing to accomplish, said plate and said cylinder would operatively co-act; that is, if the mechanism of the machine would properly operate throughout its *whole* period of co-action it would operate during the instantaneous time shown in Liddell Drawing No. 1. But as it has been clearly shown that the mechanism cannot operate through its whole cycle of movement or any part thereof, it is therefore plain that it could not operatively co-act during the instantaneous time shown in Liddell Drawing No. 1.

R-D-Q. 82. Please to look at the Liddell Drawing No. 1 and also at "Defendant's Exhibit Model of Liddell Drawing No. 1"; and state under what circumstances, if at all, the mechanism of that model can cause the plate E to commence to turn its edge W backwardly in an anti-clockwise direction with the said edge W in substantial coincidence with the notch in the cylinder under that edge as shown in Liddell Drawing No. 1.

Mr. Betts.—Objected to as not re-direct.

A. Under no circumstances can the mechanism of that model cause the plate E to commence to turn its edge W backwardly in an anti-clockwise direction with the said edge W in substantial coincidence with the notch in the cylinder under that edge as shown in Liddell Drawing No. 1; because as I have fully shown in connection with said model that it would be necessary for the gear M′ of that model and drawing to turn in an anti-clockwise direction to enable the plate E to commence to turn as stated and that as the gear M′ must always turn in a clockwise direction such reversal of turning is impossible.

R-D-Q. 83. You stated in your reply to X-Q. 77 that your knowledge of the inoperativeness of the structure shown in Liddell Drawing No. 1 was derived from a careful investigation of that drawing. Now please to state when it was that you made that investigation, and whether the results of that investigation have been set forth by you in some previous deposition in this case, and if so, in which of your former depositions those results were stated and explained by you?

A. I made that investigation a little more than a year ago; and the results of that investigation are set forth in my second deposition in this case, taken in May, 1903, and are particularly attended to in my answers to Qs. 6, 7 and 8 of that deposition.

WILBUR M. STONE.

JULIA A. COOKE, a witness produced on behalf of the defendant, being first duly sworn by the notary public, testifies as follows: the direct examination being conducted by Mr. Walker.

Q. 1. Please state your name, and your occupation or profession in life, and in what office you conduct your business?

A. Julia A. Cook; stenographer; room 529 Park Row Building.

Q. 2. Do you also in your office do typewriting for the general public, in addition to practicing your profession as stenographer?

A. I do.

Q. 3. Are you employed there by someone else, or are you the proprietress of the stenographic and typewriting office which is conducted at Room 529 Park Row Building?

A. I am the proprietress.

Q. 4. How many years of experience have you had in personally running typewriting machines to do typewriting?

A. About 15 years.

Q. 5. Now please to set aside for a moment your natural diffidence, and state what the fact is in respect of your now being a speedy typewriter operator or otherwise, as the case may be?

A. I am considered to be speedy and accurate.

Q. 6. Please now to look at a collection of documents which have already been offered in evidence in this case and which are marked "Complainant's Exhibit Hunter File of Case A", and particularly please to examine the ten sheets of purple typewriting, and the two sheets of red ink writing, contained in those documents, and state whether, in pursuance of my request, you have heretofore made a fair and correct copy of the matter contained on those purple typewritten sheets and those red pen written sheets; inserting in the completed copy the mat-

ter contained in the red pen written sheets at the places indicated for those insertions in the purple typewritten sheets?

Mr. Betts.—Objected to as immaterial.

A. On June 2nd, 1904, I made a copy of the sheets specified in your question, in pursuance of your request.

Q. 7. What request or direction, if any, did I give you in respect of making that copy speedily, and in as short time as possible, or otherwise, as the case may be?

Mr. Betts.—Same objection.

A. You asked me to make the copy as speedily as consistent with accurate work.

Q. 8. Did I tell you why I wanted you to make the copy, and tell you what use I expected to make of your work, and if so, what did I say on that subject?

Mr. Betts.—Same objection.

A. You said you wished to know how long it would take to do the work accurately, and have a perfect copy.

Q. 9. Did you know then, or do you know now whether it was to the interest of me or of my client to have it turn out to be a short time, or to be a long time, that would be necessary to make the copy?

Mr. Betts.—Same objection.

A. No, I knew nothing about it.

Q. 10. Now please to state whether having made the copy of the purple sheets, and of the red sheets, you first compared your copy with those sheets, to make sure of the correctness of the copy, and afterward compared your copy with the eleven sheets of black typewriting which is in "Complainant's Exhibit Hunter File of Case A" to ascertain whether your copy agreed also with those black typewritten sheets?

Mr. Betts.—Same objection.

A. Yes, I did.

Q. 11. In making the two comparisons which you

say you made, did you make those comparisons alone, or did you have the assistance of another person who held one of the documents being compared, while you read the other document aloud or contrarywise as the case may be?

Mr. Betts.—Same objection.

A. I had the help of my assistant in my own office, in making those comparisons.

Q. 12. Now please state how much time it took you to make your copy of the purple typewritten sheets and the red ink sheets; and state separately how much time it took you and your assistant to compare your copy with those purple sheets and red sheets; and also state separately how much time it took you and your assistant to compare your copy with the eleven black typewritten sheets.

Mr. Betts.—Same objection.

A. It took me two hours to make the typewritten copy; about 40 minutes to make the comparison of my copy with the purple and red copy, and 30 minutes to compare my typewritten copy with the black typewritten copy.

Cross examination by Mr. Betts:

X-Q. 13. Were you instructed by Mr. Walker to make the copy you refer to as rapidly as it could be done?

A. As rapidly as it could be done consistent with good work, with accurate work.

X-Q. 14. As a matter of fact, in making the copy, you didn't make any mistakes at all?

A. Yes, I made a few mistakes which it took about 10 minutes to correct; I added that time to the time I have given, as the time occupied by me in making the copy.

X-Q. 15. How long was the time it took you to make the copy referred to, and not counting any time spent in correcting mistakes or in comparison?

A. One hour and 50 minutes.

X-Q. 16. How did you time yourself in this matter?

A. Well, I had the clock before me, and when I was interrupted, I made a note of the time, and when I began again, I made a note of the time of beginning.

X-Q. 17. What time of day did you begin this work of copying?

A. I don't remember; some time during the morning.

X-Q. 18. What time of day did you end the actual copying before correcting?

A. I don't remember; I had several interruptions and the work was not continuous.

X-Q. 19. What was the general nature of these interruptions?

A. Customers coming in to have other work done.

X-Q. 20. How much time exactly was taken by these interruptions, during the period from your beginning of this piece of copying until your ending the copying?

A. I can't possibly tell, because I don't remember when I started the work nor exactly when I finished it.

X-Q. 21. Did you do the copying from the actual manuscript of the purple sheets and of the red sheets as they have been called?

A. Yes, I did.

X-Q. 22. No portion of this work was read to you, and taken down by dictation from those sheets, was it?

A. No, none at all.

X-Q. 23. Are you able to state about how much greater speed is gained in your case, for example, by having manuscript read to you and you taking it down on the typewriter from such dictation, over your having the manuscript in front of you and copying therefrom?

A. I have never proved it, but I think it would take me about—I think I could do a page in nearly half the time by having it read to me than I can if I do it myself. Perhaps that is a little liberal.

X-Q. 24. Now in the case of somewhat confused manuscript in which there were interlineations in pencil and in ink and fly sheets containing some portion of the matter to be inserted at the proper places; suppose that manuscript, (and I refer to the purple typewritten sheets and the red pen written sheets comprising all which you copied.) were read to you as rapidly as you could take it on the machine and by the person who made the interlineations and corrections, would that not much facilitate your getting the matter down quickly and accurately into your typewriting?

A. Yes, it certainly would.

X-Q. 25. I now show you ten sheets of typewriting and ask you whether those comprise the copy you made for Mr. Walker, as stated in your testimony?

A. Yes, they do.

X-Q. 26. Suppose I came into your office and informed you that I wanted the matter on those ten sheets reproduced by you in typewriting with the utmost speed you could get it out, taking it from dictation if you desired, and in order that I might catch a train, we will say. What would you say would be your speed limit of time in taking down that matter from dictation?

Mr. Walker.—Objected to as immaterial.

A. I think perhaps an hour and twenty minutes.

X-Q. 27. You would hardly claim to be the most rapid typewriter in New York or even in Philadelphia, would you?

Mr. Walker.—Objected to as immaterial.

A. I certainly would not.

JULIA A. COOKE.

UNITED STATES CIRCUIT COURT,

DISTRICT OF MAINE.

EASTERN PAPER BAG COMPANY

vs.

CONTINENTAL PAPER BAG COMPANY.

Evidence taken on behalf of the defendant, at the office of Albert H. Walker, floor 25, Park Row Building, Manhattan, New York, beginning on Monday, May 23rd, 1904, at two o'clock in the afternoon, and continuing thereafter by adjournment from time to time; the said evidence being taken before Arthur Brenton Cook, a Notary Public having authority to act as such in Manhattan, New York, and being taken down by Mrs. N. W. Pritchard, a typewriter operator, and being thus taken before said Cook by said typewriter operator, in pursuance of the stipulation of the parties, which is prefixed to the complainant's evidence, and which was made March 6th, 1902.

Present—ARTHUR BRENTON COOK, the Notary Public, and SAMUEL R. BETTS, Counsel for Complainant, and ALBERT H. WALKER, Counsel for the Defendant.

WILLIAM LIDDELL, a witness produced on behalf of the defendant, being first duly sworn by the notary pub-

lic, testifies as follows: the direct examination being conducted by Mr. Walker:

Q. 1 Are you the same William Liddell who gave a deposition in this case in March, 1903?

A. I am.

Q. 2. You testified in that deposition, that some time in the early part of January, 1896, in the office of Rudolph M. Hunter in Philadelphia, Pennsylvania, you executed two applications for letters patent of the United States on improvements in paper bag machines; and you testified that according to your recollection both those applications were executed by you on the same day, and that that day was the 5th or the 10th of January, 1896, or some day between those two dates. Since you gave that deposition, Rudolph M. Hunter has testified that those two applications were executed by you in his office on January 7th, 1896, and that they were designated by him as Case A and Case B respectively, and that when they were filed in the Patent Office they were there numbered 578,291 and 576,269 respectively. Now I ask you to state whether any change was made, with your knowledge, and under your direction, on that day, in either of those applications or in the specification or in any of the drawings of either of those cases; and if any such change was made, I ask you to state whether it was made in Case A or in Case B or whether one or more changes was made in each of those cases, and also whether whatever change, if any, was made in either of those cases, was made in the specification or was made in the drawings?

A. No, there were no changes made in either of the cases to my knowledge, either in respect to the drawings or the specifications or claims of said two applications.

Q. 3. Mr. Rudolph M. Hunter has testified since you gave your former deposition, that no change was made on that day in his office in Case B. But he has also testified that in Case A he did, under your directions make

the following changes, namely: First—An alleged change which consisted in indicating upon one of the sheets of blue prints of the three sheets of drawings of that case, the substitution of the cam mechanism of Fig. 1 of the Liddell patent 558,969, for the eccentric gear mechanism shown in the last sheet of blue prints of "Complainant's Exhibit Hunter File Wrapper of Case A", and, Second, numerous amendments made with a pen with red ink on the face of the original specification which he had prepared prior to January 7th, 1896, and which original specification with those red ink amendments thereon, constitute nine pages of purple typewriting in "Complainant's Exhibit Hunter File of Case A", and, Third, two long alleged amendments written on two sheets of paper with a pen in red ink, and which two sheets of paper constitute parts of "Complainant's Exhibit Hunter File of Case A", and Fourth, the alleged writing on that day by a typewriter operator in his office of eleven pages of typewritten specification, with a carbon copy of each of those pages, and which carbon copy of those eleven pages constitute the eleven black typewritten pages in "Complainant's Exhibit Hunter File Case A". Now please to state what knowledge, if any, you had on January 7th, 1896, of all or any part of that elaborate work, and those elaborate changes, being done in any application of yours in Mr. Hunter's office on January 7th, 1896?

A. I have no knowledge of any changes being made; or elaborate alterations being made in reference to application Case A or Case B.

Q. 4. Now I have carefully investigated and considered how much time would have been occupied in making all the changes in Case A, which Mr. Hunter has testified were made in the specifications and drawings of that case in his office on January 7th, 1896, with the conclusion that the physical work of making those changes as

testified to by him would have occupied at least three hours; and with the conclusion that the intellectual work which he testifies was done in his office on that day in contriving the changes, would have occupied either you or Mr. Hunter at least half an hour before the beginning of the doing of the physical changes. Now please to assume that my estimates of time are not too large, and on that assumption please to state whether any such changes and other work was done with your knowledge in Mr. Hunter's office on January 7th, 1896?

Mr. Betts.—Objected to as without foundation in the evidence and as hypothetical.

A. As I have previously stated; there was no such changes or alterations made to my knowledge on that date.

Cross examination by Mr. Betts:

X-Q. 5. Is your recollection in regard to what happened at the office of Rudolph N. Hunter in Philadelphia, Pa., on January 7th, 1896, so far as you know, any better to-day than it was in March, 1903, when you gave testimony in this case both on direct and cross examination?

A. Yes, I do consider that my recollection is better to-day than it was at that time. I have thought the matter over considerable since, and on that ground and for that reason, I consider my memory is better on that particular point.

X-Q. 6. Do you deny having been at Rudolph M. Hunter's office in Philadelphia on January 7th, 1896?

A. No, I acknowledge being there.

X-Q. 7. Do you deny having seen Rudolph M. Hunter there and then?

A. I seen Mr. Hunter there. I don't know which Hunter it was.

X-Q. 8. It may have been Ernest Howard Hunter for all you know, may it?

A. Yes, sir.

X-Q. 9. You can't say which Hunter it was, can you?

A. I cannot say, as I formerly stated in my previous testimony.

X-Q. 10. Can you swear that you did not see both Rudolph M. Hunter and Ernest Howard Hunter at their office on January 7th, 1896?

A. I cannot.

X-Q. 11. You swore to your two applications which are designated Case A and Case B at the Hunters' office at Philadelphia on that day, did you not?

Objected to as not cross examination.

A. Yes, to the nearest of my recollection they were both sworn to on that same day and signed.

X-Q. 12. Who was the notary before whom you swore to the application designated as A?

A. I think Mr. Hunter was the notary.

X-Q. 13. Which Mr. Hunter?

A. I don't know which; I presume the principal.

X-Q. 14. Well, which was the principal Hunter, if you know?

A. I don't know the given name of the principal.

X-Q. 15. Do you mean to testify here and now that you were not in consultation with some individual named Hunter at his office in Philadelphia on January 7th, 1896, about your patent applications which you say you swore to there on that day?

A. Well, as I have testified in my testimony last March that Mr. Haverstick and I came to the office of Mr. Hunter, and Mr. Hunter seemed to be very busy with a number of people there, and as near as I can recollect, there was no consultation or any remarks made about these applications; he simply passed the papers over to me for my signature, and at the same time they were swore to.

X-Q. 16. Who passed the papers over to you to sign?

A. I took it to be one of the Mr. Hunters.

X-Q. 17. Well, which one?

A. I don't know; I suppose it was the principal.

X-Q. 18. Was it the Hunter who took your affidavit to the paper who passed them over to you to sign?

A. The same I believe.

X-Q. 19. You say you believe; what does that mean; do you know or do you forget?

A. No, I don't forget; I simply was introduced to a gentleman and his name was given to me as Mr. Hunter. I supposed it to be so.

X-Q. 20. Why did you need to be introduced to him if you had met him before?

A. I presume that Mr. Haverstick had forgotten that he had introduced me before, and he done it the second time.

X-Q. 21. Was the Mr. Hunter who was then and there on January 7th, 1896, introduced to you as you say, the same Mr. Hunter you saw in regard to these applications A and B, when you first put them into the hands of the Hunter office or firm early in the fall of 1895?

A. Yes, as far as I am aware, that was the same Mr. Hunter, although at the first interview that I had with him I seen very little of him, and paid no attention to his appearance, as I was only there a few minutes.

X-Q. 22. Since giving your testimony in March, 1903, and signing it, have you seen a copy of your testimony?

A. Yes, I have.

X-Q. 23. Have you seen a printed copy of your testimony?

A. Yes, I have.

X-Q. 24. Have you had one in your possession?

A. Yes, I have.

X-Q. 25. For how long?

A. Probably four or five months.

X-Q. 26. Ever read your printed testimony over?

A. No, I can't say that I have read it over very thoroughly.

X-Q. 27. Well, you have read it, haven't you?

A. Read some of it.

X-Q. 28. How lately have you read any of it?

A. Well, some three weeks ago.

X-Q. 29. Did you take it up for interesting reading, or because Mr. Walker asked you to refresh your wearied memory before coming here to testify?

A. No, in the hotel where I am staying in Maine the paper sometimes isn't very interesting, and I looked through the book occasionally, the book that contained my affidavit.

X-Q. 30. You couldn't believe the war news you read in the papers, and wanted to read something you knew was true, and you looked over your deposition, is that it?

A. Not exactly that; I looked over the war news, as I am interested in that, and when I found nothing else interesting to read, I took a glance at the affidavit occasionally.

X-Q. 31. That deposition has been practically your Bible since you gave it, hasn't it, constantly in your mind?

A. No; I don't think that I have spent or devoted more than ten hours all put together in reading that deposition, or in any deposition in that book.

X-Q. 32. You learnt three or four weeks ago that you would be called perhaps to testify again in this case, didn't you?

A. No, I did not. I didn't know anything of it three or four weeks ago.

X-Q. 33. When did you hear of it in any way, as a possibility?

A. I think last Thursday afternoon, was the first I heard of it, that I would be called again.

X-Q. 34. Where are you located now and in whose employ?

A. I am located at Rumford Falls, Maine, employed by the Continental Paper Bag Company.

X-Q. 35. Still developing that wonderful paper bag machine for them?

A. Well, I don't know as it is called wonderful. I am developing a paper bag machine.

X-Q. 36. Still drawing that monthly salary?

A. Yes.

X-Q. 37. Have they raised it any?

A. I wish they would.

X-Q. 38. You came down here under the orders of the company I suppose?

A. I came here as I understand it, from a telegram from Mr. Walker.

X-Q. 39. Any extra pay for giving this deposition or simply in the day's work?

A. Well, I have no understanding in reference to pay for this particular service, but I expect to get it.

X-Q. 40. Expect to get extra pay or just your regular monthly pay?

A. I expect Mr. Walker to pay me the same compensation for my services here now, as he did during the month of March, 1903.

X-Q. 41. You expect your travelling expenses of course?

A. Yes, I certainly do.

X-Q. 42. When you get through here are you going back to work at Rumford Falls, for the Continental Co.?

A. Yes, that is the understanding, to go right back as soon as I get through here.

X-Q. 43. How long does your contract run with the Continental Company?

A. My contract will expire September 1st, this year.

X-Q. 44. Well, your old contract expired about September 1st, last year, 1903, did it not?

A. It did.

X-Q. 45. And it was renewed for one year?

A. Yes, renewed for one year.

X-Q. 46. On the same terms or better?

A. Well, I am sorry to say, on the same terms.

X-Q. 47. Have you seen or read or heard the contents of, in any way the testimony given by Rudolph M. Hunter, in this case?

A. No, I don't remember seeing Mr. Hunter's testimony.

X-Q. 48. Were you not told that he had testified?

A. Yes, I believe I was told he had testified.

X-Q. 49. Were you told anything he had testified to?

A. Well, the only thing of importance in reference to that was, that I was told he had corroborated my statements, to a certain extent.

X-Q. 50. Who told you that remarkable thing?

A. I think it was Mr. Hawley, superintendent of the Continental Paper Bag Company.

X-Q. 51. Mr. Walker didn't tell you that, did he?

A. It is quite possible he might.

X-Q. 52. How long ago?

A. It might be three months ago.

X-Q. 53. Has Mr. Walker been writing you any letters?

A. No, sir; but I was to Philadelphia on business for the Continental Company, and called in to see Mr. Walker on my way back to Rumford Falls, and as I stated before that he may have made that remark to me.

X-Q. 54. How long ago did you go to Philadelphia on this business for the Continental Co.?

A. Some three or four months ago.

X-Q. 55. Did it relate in any way to interviewing people or doing anything whatever in connection with testimony or matters relating to this case?

A. No; my visit to Philadelphia had nothing to do with this case whatever, in any shape or form.

X-Q. 56. Mr. Rudolph M. Hunter has testified under oath in this case that on January 7th, 1896, he had a per-

sonal interview with you at his office in Philadelphia, and in regard to the application called A, which he had in charge for you, and before you swore to the papers you did swear to on that occasion; will you testify under oath that no such interview with Rudolph M. Hunter did occur on that day and at that place and about said application?

Mr. Walker.—Objected to as not cross examination; because the direct examination contains no question and no testimony upon the point now inquired of.

A. I don't deny there was an interview; we met and passed the time of day, Mr. Haverstick, I and Mr. Hunter, as I assumed him to be.

X-Q. 57. Well, what were you down at Philadelphia about, on that day?

A. I was there to sign the two applications on patents referred to.

X-Q. 58. You came all the way from Brooklyn for this express purpose, did you not?

A. Yes, I came to Philadelphia from Brooklyn for that express purpose.

X-Q. 59. When did you go back from Philadelphia or leave Philadelphia?

A. After signing the papers and swearing to them, to the best of my recollection I took the afternoon train to Washington, and was there about a week or so.

X-Q. 60. Did you go to Philadelphia the night before January 7th?

A. I went to Philadelphia from Brooklyn, I believe, on January 7th, and left that same evening for Washington.

X-Q. 61. Can you state exactly how many hours you were in Philadelphia on January 7th, 1896?

A. I think I arrived in Philadelphia about 12:15, and was there until probably six o'clock in the afternoon, as near as I recollect.

X-Q. 62. Well, how did you spend your time, except in swearing, as you say you did, to these two applications?

A. Well, I went back to the hotel where I had been in the habit of staying for a year or two previous to that; and I believe had dinner, and seen some of the parties I am acquainted with, and spent the time pretty much that way.

X-Q. 63. You don't remember wasting any time in consultation with Rudolph M. Hunter about this important patent application matter, do you?

A. No, I remember of no particular time spent.

X-Q. 64. Just walked into Hunter's office, raised your right hand, swore twice or twice at once, and walked out; is that your best, distinct, refreshed, and under oath recollection of the occurrence?

A. Not at all; that isn't consistent with my previous testimony, neither is it consistent with what I state now. The facts are Mr. Haverstick and I called at Mr. Hunter's office, and we had to wait some time, probably 15 or 20 minutes before he could attend to us, as he was busy with other parties. Then there was probably 15 minutes taken up, that is, I took up 15 minutes' time, more or less, looking over the specifications, but did not read them thoroughly enough to understand the contents of either specifications or claims or drawings, if such drawings were attached, and I think the whole time that I was there would not exceed 20 or 30 minutes; it might have been less.

X-Q. 65. Why could you not understand those specifications by devoting 15 or 20 minutes to reading them, in view of the fact that they were for your inventions, that you had made the original sketches or drawings and must have been familiar with the subject matter?

Mr. Walker.—Objected to as containing recitals of fact which are in dispute, and as not being confined in its recitals to undisputed points of fact.

A. Well, I think that 15 or 20 minutes would not be a reasonable time for any man to understand certainly all the points in reference to drawings, claims and reading matter, even if he was ever so thoroughly acquainted with the construction of the mechanism contained in the application.

X-Q. 66. Well, why did not you take more time, as you were down there specially with reference to these applications?

A. Well, in the first place I had no financial interest in the matter any further, and thinking that the patent solicitor would have made the application in a proper manner in every respect, for the benefit of his clients, I had no particular interest in reading the specification as thoroughly as might have been done, for these reasons.

X-Q. 67. Did you agree to what you saw as right, and sign it as agreed to?

A. Well, I didn't see it all, but simply supposed it was right, and signed it on that ground.

X-Q. 68. Mr. Hunter was your attorney and you knew it, did you not?

A. Yes.

X-Q. 69. You agreed to what he had done, in drawing the specification when you signed it, did you not?

A. Well, I presume that is the way the law would look upon it.

X-Q. 70. Well, that is the way you looked upon it, did you not?

A. I didn't know exactly what the specifications contained thoroughly, but supposed they were all right.

X-Q. 71. And you signed and swore to those specifications with that understanding and as the work of your attorney and understanding that they embodied your inventions, did you not?

Yes; I thought and understood that they would contain the inventions or the ideas shown in the sketches

that I took to Mr. Hunter for that purpose, and I might say, that of all the applications I ever signed or swore to, I never read them over thoroughly or understood them perfectly or thoroughly before signing them, and I doubt very much if any inventor applying for a patent does fully understand or read them over thoroughly in every detail.

X-Q. 72. In regard to these two applications A and B, which you signed and swore to at Mr. Hunter's office, you did not act any differently from what you had been in the habit of doing in connection with signing and swearing to your other applications previously made, did you?

A. Yes; I acted considerably different from what I had done in previous patents, where I was interested and thought that the patent might come into practical use; I took the specifications, claims and drawings home for a night or two, and read and studied them over pretty thoroughly before signing; that is a rule with me to do so.

Adjourned until Tuesday, May 24th, 1904, at 11 o'clock in the forenoon.

TUESDAY, May 24th, 1904,
11 o'clock, A. M.

Met pursuant to adjournment, with the notary and the counsel and the witness present as before.

X-Q. 73. Now when you looked over the specifications of the A Case and the B Case referred to, at Mr. Hunter's office in Philadelphia on January 7th, 1896, did they consist of complete typewritten sheets?

A. Yes, I presume they were complete typewritten sheets, although I didn't examine them thoroughly enough to ascertain if that was so or not.

X-Q. 74. Well, is not your recollection, so far as you remember, that the papers you looked over and signed, consisted of complete typewritten sheets?

A. I can't say positively whether they were complete typewritten sheets or not, as I simply looked at the first page, I believe, and took it for granted they were all right, and signed and swore to the same.

X-Q. 75. Did it take you fifteen minutes' time to look over the first page of these two application papers?

A. I have never said it took fifteen minutes' time to look over the two application papers; fifteen minutes' time was taken up, more or less, with talking to Mr. Haverstick and signing the papers and swearing to them.

X-Q. 76. At the time you did look at these A and B application papers, and during the time you did look at them, just before signing and swearing to them, do you remember seeing anything among the sheets of those applications other than typewritten pages?

A. No; I have no recollection of seeing anything amongst these sheets other than typewritten pages, unless it may have been the drawings attached to the same, which I am not sure were attached to the specifications.

X-Q. 77. In connection with the papers of the application called A, do you remember seeing any blue print or blue prints of any drawings on the day referred to?

A. No, I have no recollection of seeing any blue prints attached to these sheets, and I think if I had seen them I would recollect.

X-Q. 78. My question was not limited to blue prints attached to the sheets, but any blue prints relating to the A application. Did you see any on that day, as you recollect?

A. I have no recollection of seeing any blue prints, either attached to the sheets or otherwise, in Mr. Hunter's office that day, with reference to the application spoken of.

X-Q. 79. How about the application called the B application? Do you remember whether you saw any drawings or blue prints on that day at Mr. Hunter's office relating to that application?

A. No; I have no recollection of seeing any blue prints or drawings in reference to application B in Mr. Hunter's office on the day mentioned, the 7th of January, 1896.

X-Q. 80. Referring to the sheets of the B application, was there anything among those sheets, so far as you remember, except typewritten pages, and excepting possibly a little printed matter on the first and last sheets, when you looked at that B application before signing and swearing to it at Hunter's office?

A. I have no recollection of anything on these sheets other than typewritten sheets done in the usual manner, and I have no recollection of seeing anything written by pen and ink or interlined in Case B at that time or any other time.

X-Q. 81. And about the application Case A, is your recollection any different from what you have stated in your last answer about Case B?

A. No; I have the same answer to give in both cases.

X-Q. 82. Have your relations with Mr. Rudolph M. Hunter during the time he was taking out patents for your inventions and since then, down to the present time, been friendly?

A. Yes; our relations have been perfectly friendly since I knew him first up to the present time, although I know very little of the gentleman.

X-Q. 83. Do you know of any reason relating to your relations with Mr. Hunter, why he should go on the witness-stand and swear to certain things happening at his office on January 7th, 1896, unless he believed them to be true?

Mr. Walker.—Objected to as not cross examination.

A. No; I know of no good reason why Mr. Hunter should go on the witness-stand and testify to things that he didn't believe true; but I do believe that at that time he was a very busy man and possibly forgot things that he intended to do, in reference to my case.

X-Q. 84. You think it quite impossible that you should have forgotten things which happened in regard to the occasion of January 7th, 1896, at Mr. Hunter's office, especially as you say you took little interest in the applications, as you had no financial interest in them?

A. I didn't say that I thought it quite possible that I may have forgotten things at Mr. Hunter's office on the date spoken of.

X-Q. 85. Well, is your claim that you remember every detail of what happened on that occasion at Mr. Hunter's office?

A. No; I wouldn't positively swear that I fully remember every detail, as my memory isn't above the average of men, I think.

X-Q. 86. Isn't it a fact that you went down to Philadelphia to execute these applications, only because you were carrying out an agreement of contract in the matter, and that you did take little interest in what did occur at Mr. Hunter's office on that occasion?

A. It is a fact that I went there to comply with my contract in signing and executing papers, and didn't take as much interest as I have in some cases; one reason is, I didn't think that if a patent was granted on the applications, they would ever go in pub'ic use; and another reason is that the company didn't request me for to take these specifications and claims and drawings home to consider them over, as I usually do, and the case was hurried as far as I was concerned, and I merely signed and executed them and left within about fifteen minutes.

X-Q. 87. You did not deliberately try and do anything while at Hunter's office on this occasion to make the patent granted on the A application void, did you?

A. I certainly did not.

X-Q. 88. Did anything occur in your observation while at Hunter's office that you remember, that was irregular, in connection with the signing and execution of these papers?

Mr. Walker.—Objected to on the ground that it calls upon the witness to judge what transactions are regular and what transactions are irregular in the eye of the law in respect of signing and executing applications for patents.

A. No; I saw nothing or knew of nothing that was irregular, or out of the regular line of doing business in that way, at Hunter's office on the day mentioned.

X-Q. 89. Did you on that occasion have any idea or impression or reason to think from anything that came under your observation that some trick was being played upon you in connection with this A application, and the execution thereof?

A. No; I seen or knew nothing that would give me the least reason to suspect that there was anything done or said but what was consistent and honorable, done that day in Mr. Hunter's office, to my knowledge, in reference to said applications.

X-Q. 90. As an honorable man you would not have signed and sworn to this application A, unless you believed you were signing and swearing to an application setting forth inventions of yours, would you?

A. No; I fully believed that the applications contained the inventions that I had given to Mr. Hunter for the purpose of drawing up such applications previous to that date.

Complainant's counsel desires to call attention in connection with the above cross examination, to the testimony, both direct and cross, of this witness given in March, 1903, and which appears on pages 527 to 763 inclusive of the defendant's print-

ed record in this case, and much of which bears closely upon the above direct and cross.

CROSS EXAMINATION CLOSED.

The deposition is now closed and is signed by the witness.

WILLIAM LIDDELL.

UNITED STATES CIRCUIT COURT,

DISTRICT OF MAINE.

EASTERN PAPER BAG COMPANY,

vs.

CONTINENTAL PAPER BAG COMPANY.

Evidence taken on behalf of the defendant, at the office of Albert H. Walker, floor 25, Park Row Building, Manhattan, New York, beginning on Wednesday, June 1st, 1904, at 3 o'clock in the afternoon; the said evidence being taken before William E. McReynolds, a Notary Public having authority to act as such in Manhattan, New York, and being taken by Miss Rose Feuerlicht, a typewriter operator; and being thus taken before said notary by said typewriter operator in pursuance of the stipulation of the parties, which is prefixed to the complainant's evidence and which was made March 6, 1902.

Present—William E. McReynolds, a Notary Public; and Samuel R. Betts, Counsel for complainant; and Albert H. Walker, Counsel for defendant.

Henry Drury, a witness produced on behalf of the defendant, being first duly sworn by the Notary Public, testifies as follows: the direct examination being conducted by Mr. Walker.

Q. 1. Please state your name, your age, your residence and your profession or business in life?

A. Henry Drury; 38; West Collingswood, New Jersey; business, draftsman.

Q. 2. Where are you working as a draftsman at present?

A. With the Dupont Powder Works, Wilmington, Del.

Q. 3. When, if ever, did you have an office or room in which you carried on the business of draftsman at 712 Walnut street, Philadelphia?

A. That was about '89—from about 1889 to 1899.

Q. 4. I call your attention to the year 1896, particularly; and ask you whether during that year and perhaps for some time before and after that year, you occasionally made drawings for Rudolph M. Hunter, who was engaged in soliciting patents at 926 Walnut street, Philadelphia?

A. I did, yes, made all his drawings.

Q. I now show you a collection of documents already in evidence in this case and marked Complainant's Exhibit "Hunter File of Case A", and I call your particular attention to the four sheets of blueprints contained in that file, and to the fact that the name Henry Drury appears as a witness on each of those sheets of blueprints; and I ask you to state whether you are the same Henry Drury whose signature appears at that place on each of those sheets of blueprints, as a photographic copy of an original signature?

A. Yes, sir.

Q. 6. Now, please to state who it was that made those four sheets of blueprints, and who it was that made the drawings from which those four sheets of blueprints were photographically produced?

A. I did.

Q. 7. I call your attention to the fact that one of those blueprints contains what is designated as Fig. 1, and contains no other figure; and I also call your attention to the fact that another one of those blueprints contains a figure which is designated thereon as Fig. 1, and also contains four other figures which are designated thereon as Figs. 9, 10, 11 and 12, and I ask you to state (without attempting to give dates) what was the history of the making of the drawing from which those blueprints were made, and also the history of the making of those two blue prints, so that the relation of those two blueprints to each other may be pointed out by you; and for the sake of brevity I suggest that you designate that blueprint which has only Fig. 1 thereon, as the first blueprint, and that you designate that blueprint which has Figs. 1, 9, 10, 11 and 12 thereon as the second blueprint.

A. The first drawing (of which blueprint No. 1 is a copy), was made, to the best of my recollection, from a drawing that was given to me by Mr. Ernest Hunter, and was given to him by Mr. Liddell. After this drawing was prepared, the machine was declared, as I recollect, to be inoperative, by Mr. R. M. Hunter, who examined the drawings after I prepared them; he called me up to his office and explained to me the change that he thought necessary, and endeavored to make it clear to me, by making pencil sketches on the blueprint. I said to him that the machine and the changes that he wanted, would involve mechanism that needed to be carefully planned, and I told him that I didn't think that I could make them from those sketches, that it was necessary to have cams of proper shape; and then he said that he would prepare

a drawing and he would give it to me to make the corrections from; and after he gave me that drawing, I erased certain portions of blueprint marked here No. 2—I should have said I erased certain portions of the drawing from which blueprint No. 2 was made, and containing Figs. 1, 9, 10, 11 and 12, and made the correction as the blueprint now shows; and I might also say that I put in Figs. 9, 10, 11 and 12.

Q. 8. I call your attention to the fact that the second blueprint differs from the first blueprint in the following respect: It contains Figs. 9, 10, 11 and 12, which the first blueprint does not contain; and it contains a cam marked K and another cam marked K′ and a rod marked k' and a link marked k^2, and an arm connecting that link to the gear M^1, which cams, rod, link and arm are not contained in the first blueprint; the first blueprint contains two eccentric gears, one of which is marked K, which the second blueprint does not contain, and the second blueprint contains an unlettered arm extending diagonally toward the signature of R. M. Hunter from the shaft *f*, which unlettered arm appears in the second blueprint to be worked by the cam K′ and which unlettered arm does not appear in the first blueprint; and I also call your attention to the fact that the first blueprint has some pencil sketches around the shaft *f* and to the right of that shaft and also has a pencil sketch about an inch above that shaft. Now please to ignore for the present, the figures 9, 10, 11 and 12 and confine your mind to the other differences I have mentioned between the first blueprint and the second blueprint; and then state, even at the expense of a little repetition, how it happened that the second blueprint differs from the first blueprint in respect of those parts which I have enumerated in Fig. 1 of the first blueprint and the second blueprint respectively?

Objected to as without foundation, as it does not appear that the witness knows or has

means of knowledge to enable him to answer the question.

A. Well, I should say that Mr. Hunter on examining the movements shown in the first blueprint, namely, that of the eccentric gears, came to the conclusion that the mechanism of that kind would be inoperative, for the reason that they would produce continuous rotary movements, and he saw that cams with intermittent movement would have to be substituted, and he developed a cam shown in the second blueprint, and I changed the drawing to suit.

Answer objected to as evidently mere guesswork on the part of the witness.

Q. 9. You stated in answer to Q. 7, that after you prepared the original drawing from which the first blueprint was made, Mr. R. M. Hunter called you to his office and explained to you the change that he thought necessary, and endeavored to make it clear to you by making pencil sketches on the blueprint. Now, please to point out, if you can, on that first blueprint, those pencil sketches?

Objected to as leading and without sufficient foundation.

A. The pencil sketches shown on this first blueprint would indicate something of what is shown in the second blueprint; that is, that the cams were to be substituted for the eccentric gears.

Q. 10. You stated in your reply to Q. 7 that R. M. Hunter made those pencil sketches on that blueprint; now, please to state whether you were present or whether you were absent when he made those pencil sketches?

A. My recollection is that I was present; and that I endeavored to make the changes from his sketches and description, but found that I couldn't do it.

Q. 11. After you had tried and failed to make the changes from the pencil sketches which appear on the

first blueprint and from such description as Mr. Hunter had given you of such changes, what next did you say to Mr. Hunter about the job, or what next event of any kind occurred in connection with the job?

Question objected to as without foundation and stating the evidence of the witness in a misleading way.

A. I did not try to make the changes, but simply told Mr. Hunter, at the time, to make the drawing.

Q. 12. What drawing do you refer to in your last answer?

A. The drawing that I made the changes from, and shown in the second blueprint.

Q. 13. What kind of a drawing did you ask Mr. Hunter to make, as a guide to you in changing the original drawing as he wanted to have it changed?

Objected to as leading.

A. I asked him to make an operative drawing, a drawing that would show the shape of the cam necessary for the particular movement.

Q. 14. What response did Mr. Hunter make to that request?

Objected to as without foundation.

A. I do not recollect the particular response, except he might have said that he would make such a drawing.

Q. 15. Did he at that time, or at any time afterwards, furnish you with such a drawing?

Objected to as indefinite.

A. That is my recollection, that he certainly did.

Q. 16. Was that drawing on paper, or was it on cardboard? And in either event was it in pencil, or was it in ink?

A. My recollection is that it was a pencil drawing on Manila paper.

Q. 17. How much time, as near as you can remember, passed after Mr. Hunter made the pencil sketches on the

first blueprint and before he made the pencil drawing on Manila paper?

Question objected to as without accurate foundation from the testimony of the witness.

A. I have no recollection of that at all, as to the time.

Q. 18. Did you see Mr. Hunter make the pencil drawing on Manila paper, on the one hand; or, on the other hand, did he simply furnish that drawing to you?

A. He furnished the drawing to me.

Q. 19. Did he furnish the drawing to you at the same time that he made the pencil sketches on the first blueprint; or did he furnish that drawing to you at some later time?

Objected to as misleading, and not accurately founded on the testimony of the witness.

A. At some later time.

Q. 20. Was it on the same day or on some later day, that he furnished the pencil drawing on Manila paper, after he made the pencil sketches on the first blueprint in your presence?

Same objections.

A. Oh, I should say that a matter of two or three days elapsed.

Q. 21. Was William Liddell present, when Mr. Hunter made the pencil sketches on the first blueprint in your presence?

Objected to as without foundation.

A. I do not recollect; but I do not think he was.

Q. 22 Who furnished all the information that you received, to enable you to know how to change the original drawing from what is shown in the first blueprint, to what is shown in the second blueprint?

Objected to as without foundation.

A. Mr. R. M. Hunter.

DIRECT EXAMINATION ENDED.

Adjourned until Friday, June 3, 1904, at 10:30 in the forenoon.

Friday, June 3, 1904, at 10:30 A. M.

Met pursuant to adjournment.

Cross examination by Mr. Betts:

X-Q. 23. Do you know Mr. Francis T. Chambers, a lawyer, of Philadelphia?

A. Yes, sir.

X-Q. 24. How long have you known him?

A. About fourteen or fifteen years.

X-Q. 25. Did Mr. Francis T. Chambers have any interview or interviews with you personally, in regard to what you might know or remember about the drawings you made in connection with the patent application of William Liddell, and which has been referred to on your direct examination?

A. Yes, sir.

X-Q. 26. How many such personal interviews, as you remember, did you have with Mr. Chambers in relation to the matter of these Liddell Drawings?

A. One.

X-Q. 27. Will you swear that you did not have more than one?

A. That is as near as I can remember. Mr. Chambers wrote me concerning some drawings that belonged to Mr. Liddell and then I came to see him about them; that's the only interview that I recall.

X-Q. 28. Was anybody, besides Mr. Chambers and yourself, present at that interview which is the only one you recall on this subject?

A. Well, at that interview we made a search for the drawings, and there were two or three persons present at the time of making that search.

X-Q. 29. Well, who were present?

A. Yourself, Mr. Betts; and Mr. Chambers' clerk, Mr. Stewart; and Mr. Williams.

X-Q. 30. Did you not on that occasion, and in connection with that search, state distinctly to Mr. Chambers and myself in Mr. Chambers' office, in Philadelphia, that you had no recollection whatever about the drawings for the Liddell application or applications which we were inquiring about, namely, those in Mr. Hunter's hand and for which you made drawings in the fall of 1895?

A. I said, at that time, that I could certify and identify the drawings as being my work, but that the circumstances under which the drawings were made I did not recollect.

X-Q. 31. That last statement is entirely true; and do you not remember that at that time we showed you a printed Patent Office copy of the Liddell Patent, and the drawings thereof, bearing your signature as printed or lithographed, and a printed copy of which patent No. 558,969 I now show you?

A. Yes.

X-Q. 32. Do you not remember telling Mr. Chambers and myself on that occasion, that you remembered no details in connection with the making of the drawings on that patent application, but simply thought you could identify the original drawings if shown?

A. I did.

X-Q. 33. Did we not then urge you to look up any memorandum or writings of any kind which might refresh your recollection on the subject, and did you not thereafter make a search for written memorandum or book entries having any relation to these drawings?

A. I did.

X-Q. 34. And did you not thereafter report to Mr. Francis T. Chambers, the lawyer who is of counsel for the plaintiff in this case, that you found nothing of the kind relating to these Liddell drawings?

A. I think I wrote to Mr. Chambers, and told him, that the only thing that I could find was some memorandum of charges for paper bag machine. That is all, I think, that the report consisted of—I also sent him a bill of a small charge for time that I took in making the search.

X-Q. 35. Did you not, in company with Mr. Chambers and myself, at Philadelphia, on the occasion referred to, make a search through a room containing a large number of old sketches, drawings, papers, models, &c., in the attempt to find certain original drawings stated to have been made by William Liddell, and to have been handed to you in connection with your making the drawings for these Liddell applications of the fall of 1895?

A. Yes.

X-Q. 36. No such original drawings or sketches were found, were they, on that occasion?

A. No, sir.

X-Q. 37. Nor were you ever able to find any of these original Liddell sketches or drawings, were you?

A. No, sir.

X-Q. 38. Did not Mr. Chambers and myself at that interview at his office in Philadelphia, state to you or inform you, that we desired to take your testimony in a certain suit brought on the Liddell patent, the drawings of which we were inquiring about, and with reference to the making of those drawings, if you remembered anything about that matter?

A. Yes, sir.

X-Q. 39. And you then and there told us you did not remember anything about the making or changing of those Liddell Drawings, did you not?

A. Yes, sir.

X-Q. 40. And you were not called as a witness by Mr. Chambers, or myself, were you?

A. No, sir.

X-Q. 41. Did either Mr. R. M. Hunter or Mr. Ernest H. Hunter ever interview you in regard to the Liddell drawings within the past two or three years?

A. Yes, sir.

X-Q. 42. And they inquired of you to about the same effect as Mr. Chambers and myself had, as already stated, did they not, namely, if you remembered anything about the details of making them?

This question is objected to because it does not specify the time and the place of any such interview as is inquired into.

A. I do not recollect having any particular interview with Mr. R. M. Hunter, although, as I had seen him a number of times, I may have mentioned the case, and I think it is very likely that the changes in the drawings in question were spoken of, and that I was able to recall certain matters relating to those changes.

X-Q. 43. Now, when and where did this interview with Mr. R. M. Hunter occur at which "you think it likely you were able to recall certain matters"?

A. It occurred at his office, Mr. Hunter's office, in Philadelphia, and some time afterwards Mr. Chambers and myself and yourself made the search.

X-Q. 44. So your interview with Mr. R. M. Hunter at which you say you "think it is very likely that the changes in the drawings in question were spoken of and that I (you) was able to recall certain matters" occurred before your interview with Mr. Chambers and myself at Philadelphia in regard to which you have already testified that you told Mr. Chambers and myself that you did not remember anything about the making or changing of those Liddell Drawings? Is that the fact?

A. I did not say that it occurred before; I said it occurred afterward.

X-Q. 45. You distinctly stated in your testimony in answer to X-Q. 43, and in the hearing of Mr. Walker and

myself, and as correctly taken down by the typewriter without exception by anybody, "it occurred at his office, Mr. Hunter's office in Philadelphia, and some time afterwards Mr. Chambers and myself and yourself made the search." How, in face of that, can you now, when you find yourself cornered by my last question 44, venture to deny that you made that statement, as taken down?

Mr. Walker objects to this question because it assumes to construe the answer to X-Q. 43, and to construe that answer to suit Mr. Betts; whereas that construction is not the only reasonable construction of that answer.

Mr. Walker also objects to the question as being an attempt to intimidate the witness by illogically taking the ground that the witness has been cornered, by the cross-examination.

A. There certainly must have been an improper construction placed upon my answer; because the interview that I had with Mr. Hunter certainly was fixed in my mind as being after the search with Mr. Chambers and yourself.

X-Q. 46. When did this interview with Mr. R. M. Hunter occur?

A. I do not recall any particular interview, but, as I said in seeing him a number of times, the case was spoken of, and no particular interview that I recall.

X-Q. 47. When was the last of these interviews with Mr. Hunter to which you refer?

A. In answer to that, I would say that there are two Mr. Hunters—Mr. R. M. Hunter and Mr. E. H. Hunter. I cannot recollect any time, it being the last interview with Mr. R. M. Hunter, but I saw Mr. E. H. Hunter about a week ago, and the case was spoken of then.

X-Q. 48. What did you then tell him that you remembered about it, that you had not remembered before?

A. I didn't tell him I remembered anything about it. I simply asked him what he could tell me about it.

X-Q. 49. Did you go to his office for the purpose of asking him that about a week ago?

A. I stopped in the office as I was passing, and I will say for that particular purpose.

X-Q. 50. Well, what did he tell you on that occasion, on that subject?

Objected to as not cross examination.

A. He told me a number of things relating to the case.

X-Q. 51. Well, what?

Same objection.

A. He told me of how the case came into his hands, and how it was executed, and as to the making of the drawings, etc.

X-Q. 52. What did he at that interview tell you as to the making of the drawings, etc.?

Same objection.

A. He said that Mr. Liddell (as near as I can recollect) came into the office with his rough drawing of the bag machine, that Mr. R. M. Hunter wasn't in, and that he took the case and turned it over to me, and that I prepared the drawings and gave the drawings to him. I do not know whether I gave the drawings to him, I am speaking now of the patent drawings, but I sent them up to Mr. Hunter's office after I had made them.

X-Q. 53. What did Mr. E. H. Hunter say in regard to the changes being made in the drawings?

Same objection.

A. I think he said that when Mr. R. M. Hunter wrote the specification, he saw that the machine would be inoperative as it was, and that Mr. R. M. Hunter made the drawings for me to correct the patent drawing from. That is as near as I can recollect.

X-Q. 54. What did Mr. E. H. Hunter say about the blueprints or changes or pencil drawings on them.

Same objection.

A. I don't think that was mentioned.

X-Q. 55. Did you ever discuss the pencil marks on the blueprints with Mr. R. M. Hunter, since that interview with Mr. Chambers and myself at Philadelphia?

A. I don't know that I did; I could not say as to that.

X-Q. 56. Did you ever state to Mr. R. M. Hunter or to Mr. E. H. Hunter, or to anybody until you met Mr. Albert H. Walker, that Mr. R. M. Hunter made the pencil marks or sketches on the blueprint which you have designated as the first blueprint, in your presence?

A. Not that I know of; I don't remember ever speaking of or seeing the blueprints with the pencil sketches on them.

X-Q. 57. When did you first learn of the existence of Mr. Albert H. Walker, as counsel in this case for the defendant?

A. That was when Mr. Walker came to see me at the Du Pont works, Wilmington; I did not know anything about the case, as to who were the parties concerned.

X-Q. 58. Well, exactly when did Mr. Walker, defendant's counsel, honor you with a visit at the DuPont Works, Wilmington?

A. On Tuesday, May 17th, 1904.

X-Q. 59. And he arranged beforehand a meeting with you, or did he simply drop on you?

A. Simply dropped on me.

X-Q. 60. Of course he explained to you the object of his visit?

This question is objected to as not asking the witness what Mr. Walker said to him, but as asking the witness to put a construction on what Mr. Walker said, and to testify to that construction.

A. Yes, sir.

X-Q. 61. What did he say it was?

A. He wanted to know what I could remember of making the drawings and the changes, and anything that I could remember of the case.

X-Q. 62. Well, you then and there told Mr. Walker as you had told Mr. Chambers and myself, that you could not remember any details in regard to making the drawings or changing the drawings, did you not?

This question is objected to because it does not inquire of the witness what reply he made to Mr. Walker's request for information.

A. I did; but I told him I had not seen any of the drawings or copies of the drawings, but that I remembered from my interview with Mr. Chambers that the changes related to the substitution of the cams, and I think I said for the substituion of the cams for the eccentric gears; but I am not sure that I mentioned gears, but that I knew that it related to a change of cams, or something of that kind.

X-Q. 63. You did not then and there tell Mr. Walker you remembered seeing Mr. R. M. Hunter make pencil marks or sketches on a blueprint of the Liddell drawing, did you?

A. No, sir.

X-Q. 54. What arrangement, if any, was made by you with Mr. Walker in regard to coming on here and testifying; I mean at that time.

A. None whatever.

X-Q. 65. How did you happen to come on to New York to see Mr. Walker again at his office, refresh your memory, go on the witness stand and remember these various things that you told Mr. Chambers and myself you did not recollect about?

This question is objected to because it puts an unfair construction upon what the witness

had told Mr. Chambers and Mr. Betts; and Mr. Walker suggests to Mr. Betts that he should first inquire of the witness how he happened to come to New York and see Mr. Walker again at his office; and having obtained an answer to that question he should inquire of the witness what, if anything, has refreshed his memory since the interview between Mr. Chambers and Mr. Betts.

Mr. Betts is deeply grateful for Mr. Walker's suggestion to him, but strongly objects to the suggestion and prompting of the witness contained in Mr. Walker's above statement.

A. Mr. Walker wrote me that he had Mr. Hunter's file of the original blueprint, and the blueprint of the corrected drawing, and that if I would come to his office, I could probably remember something of making the changes; and he said whether I remembered anything or not, that he would compensate me for coming over.

X-Q. 66. What was the compensation agreed upon?

A. $25 for time and expenses, for the day.

X-Q. 67. Was the $25 to include your expenses?

A. Yes.

X-Q. 68. Well, this is the second day you have been on; is that $25 more?

A. Nothing has been said as to that ; that is what I expect.

X-Q. 69. What is your ordinary pay per day at the DuPont Works, Wilmington?

A. $1,500 per year, a salaried position.

X-Q. 70. Now, when you came to Mr. Walker's office he showed you the Hunter file and the blueprints about which you have testified, did he not?

A. Yes, sir.

X-Q. 71. Is there anything whatever on that first blueprint referred to, which shows on its face when the

pencil marks or sketches thereon were made, and that you can point out? Please look at the blueprint while answering.

A. No, sir.

X-Q. 72. Is there anything whatever on that first blueprint which shows that both or all of the pencil marks or sketches thereon were made at practically the same time or on the same day?

A. Not that I know of.

X-Q. 73. Are you able to say that all the pencil marks and sketches on that first blueprint were in fact made upon the same day, from your own knowledge?

A. No, sir.

X-Q. 74. Are you able to swear to the exact day and date when any of those pencil sketches or marks were made?

A. No, sir.

X-Q. 75. Did you make any of those pencil marks or sketches on that first blueprint yourself?

A. Not that I know of, or that I can recollect.

X-Q. 76. Can't you swear you did not make them?

A. I cannot.

X-Q. 77. Then you do not know by examining the first blueprint now before you, and looking at the pencil marks or sketches thereon, whether you made them yourself, or whether you did not make them yourself; is that it?

A. I cannot say positively, because I don't know what I might have done; but the marks certainly have the appearance of Mr. R. M. Hunter's sketches, as I know them.

X-Q. 78. Well, Mr. R. M. Hunter in his testimony in this case already taken and recorded, has sworn that he did make those sketches on the first blueprint; do you see any reason to doubt that testimony as being true?

A. I do not.

X-Q. 79. Mr. R. M. Hunter in his testimony in this

case under oath, has stated that he made those pencil marks and sketches on that first blueprint under certain circumstances stated, but which did not include your presence at the time the pencil sketches were made; do you see on the blueprint or in connection with the sketches, or have you from any other source, reason to doubt that sworn testimony of Mr. Hunter?

This question is objected to because it asks the witness to assume the functions of a judge and pass upon the question of what weight should be attached to Mr. Hunters's evidence, and also because it does not fairly represent to the witness the character of Mr. Hunter's testimony in respect of the presence or absence of the witness at the time Mr. Hunter made the pencil sketches on the first blueprint.

A. I have not.

X-Q. 80. Now, I do not question that you were shown at some time by Mr. R. M. Hunter that blueprint we call the first blueprint and that it had on it when shown to you the pencil marks and sketches now thereon and that explanation was given to you by Mr. Hunter in connection with an erasure and change to be made in the original drawing from which that first blueprint was made; but as to just when that interview was had between you and Mr. Hunter and such explanation given in connection with the pencil sketches I ask you if after this lapse of time you are now in your sworn testimony able to state the exact date?

This question is objected to as not cross-examination, because the direct examination did not contain any statement whatever as to the date inquired of.

A. I am not.

CROSS EXAMINATION CLOSED.

Re-direct examination by Mr. Walker:

R-D-Q. 81. You said in reply to X-Q. 68, that you expect $25 for your travelling expenses and time to-day, because that was the amount Mr. Walker promised to give you for coming to New York and conferring with him, whatever the result of that conference might be. Now I will suggest to you, what perhaps you do not understand already, namely, that while it was proper for me to promise you $25 for looking up the subject about which I desired information, I did not expect to pay you anything more than your legal fees for coming from your residence to New York and returning thereto and for testifying in the case, and which legal fees will amount to somewhat less than $25. Inasmuch as you made the answer you did to X-Q. 68, I inquire of you whether you are willing to receive your legal fees for travel and testimony in this case, in addition to the $25 which Mr. Walker promised you for services prior to going on the stand?

A. Yes, sir.

R-D-Q. 82. Do you know whether the testimony you gave on direct examination in this deposition, is important or is unimportant?

A. I do not.

R-D-Q. 83. Do you know in what way, if at all, that testimony can affect the decision of the case?

A. No, sir; I don't know what the drift of the case is in any way. As to the testimony affecting the case, I don't know anything about it.

R-D-Q. 84. At the close of the direct examination, what did Mr. Walker say to you about not conversing with any one about the case while you were on the stand, or before the end of the deposition?

A. I don't remember now.

R-D-Q. 85. At the close of the cross examination, what did Mr. Betts say to you about not conversing with

any one about the case before the deposition would be finished?

A. He simply said not to converse with anyone; that's all.

R-D-Q. 86. Did you conform to that request of Mr. Betts, by refraining from conversing with anyone about the case, after the end of the cross-examination and during the recess which we took for lunch before the beginning of the re-direct examination?

A. Yes, sir.

R-D-Q. 87. Did Mr. Betts or did Mr. Chambers, or did anyone else ever show you the Hunter file or any of the blueprints therein (during the last three years) until Mr. Walker showed you the Hunter file and the blueprints therein in his office the day before yesterday, which was June 1st, 1904?

A. Not to my knowledge.

R-D-Q. 88. Call particularly to mind the time when you had the interview with Mr. Betts and Mr. Chambers, and when you made the search for any documents, drawings or sketches which might relate to the case, and state whether on that occasion anybody showed you the Hunter file of Case A, or showed you either of the four blueprints now contained in that file?

A. No, sir.

R-D-Q. 89. Now, fix your mind upon the interview with Mr. Walker of May 17, 1904, at Wilmington, Del., and state what, if anything, you said to him at that time about the possibility or probability that your memory of the making of the Liddell Drawings might be refreshed if you could see the blueprints of those drawings or could see the original drawings themselves?

Objected to as leading.

Question withdrawn.

R-D-Q. 90. Please to fix your mind upon the interview with Mr. Walker at Wilmington, Del., on May 17th,

1904, and give as full an account as you can of what he said, and of what you said in that interview, as if you were recalling the substance of the dialogue which occurred between you and him, without attempting to give the particular words used either by Mr. Walker or by yourself in that dialogue?

A. Mr. Walker asked me if I remembered the Liddell case; I told him that Mr. Chambers had asked me some while ago about it, and that what I did remember of it was from that interview I had with him; that I knew that the case related to some changes being made in the drawings, and that they related to a cam—arrangement of cams; and I think I said that Mr. Chambers showed me, at that time, a photolithographic copy of the drawings; and I told Mr. Walker that I had said to Mr. Chambers then, that it was so long since the drawings were made I could not recall the case except to identify my work; and Mr. Walker said that there had been some marks made on one of the blueprints and I think he asked me if I remembered those marks; I said that I did not, that I knew very little of the case. That I think is about all.

R-D-Q. 91. What, if anything, was said at that interview, with Mr. Walker on May 17th, about your refreshing your memory or about the possibility of your memory being refreshed, if you could see the original blue print?

A. I said that I might recall come of the circumstances, if I could see both the blueprint of the original sheet, and the sheet as it was changed.

R-D-Q. 92. Now ,please to state when it was that you next saw Mr. Walker after that interview at Wilmington?

A. June 1st, 1904.

R-D-Q. 93. Where did you meet Mr. Walker on June 1st, 1904?

A. At his office on the 25th floor, Park Row Building, New York, at about 12 o'clock noon.

R-D-Q. 94. What papers, if any, did Mr. Walker

present to you for examination at that time, and what drawings or blueprints formed parts of those papers?

A. He showed me Mr. Hunter's file marked Complainant's Exhibit Hunter File of Case A.

R-D-Q. 95. What did you do thereupon in the way of examining that file, and particularly in the way of examining the four blueprints which are contained in that file?

A. I immediately examined the blueprints very carefully so as to identify myself and refresh my memory as to the operation of the machine.

R-D-Q. 96. When you compared the first blueprint (which contains Fig. 1 only) with the second blueprint (which contains Figs. 1, 9, 10, 11, and 12) how, if at all, did those two blueprints operate to refresh your memory as to the history of the making of the original drawing before it was changed from the condition of the first blueprint to the condition of the second blueprint, and as to the history of that change?

Objected to as calling for a conclusion.

A. I fully identified both sheets as being my work, in the first place; and then I examined the pencil marks on the first blueprint, and then I began to think what the cause of changing the second blueprint would be, and came to the conclusion that that was Mr. Hunter's method of instructing me in making changes from one blueprint to the other, and that I saw that I wouldn't undertake to make the changes, to the cams, from those sketches, as it involved a number of movements, and therefore I asked Mr. Hunter to make a working drawing.

R-D-Q. 97. Now, is it probable that you would have ever recalled the history of the changes in the original drawing from the condition of the first blueprint to the condition of the second blueprint, if you had never been shown the two blueprints, so as to compare them to-

gether, and thus refresh your recollection as to the character, and also as to the history of the changes which you did make?

Objected to as calling for guesswork and a conclusion by the witness.

A. No, sir. These sketches on this blueprint, as I have said, certainly recalled other cases of Mr. Hunter's where he would make sketches and have me change the drawings from those sketches.

R-D-Q. 98. If Mr. Betts or Mr. Chambers had shown you the Hunter file and the four blueprints contained therein, and permitted you to examine them carefully (as Mr. Walker long afterwards did), would you have been able to refresh your recollection by examining those blueprints, as well as you did refresh your recollection by examining them when Mr. Walker showed them to you?

Same objection as above.

A. I think it very likely.

R-D-Q. 99. Now, Mr. Drury, I have finished the redirect examination, except to give you an opportunity to clear up a few points where your answers, as put down by the typewriter operator, appear to be incomplete or inharmonious in some respects; and first I call your attention to your answer to X-Q. 56, where you said that you did not remember ever speaking of or seeing the blueprints with the pencil sketches on them, and to the fact that this answer was in reply to a question which, taken in connection with the context, would appear to be limited to the last few years. To make the matter plain, I ask you to state what you meant by saying in replying to X-Q. 56 that you did not remember ever speaking of or seeing the blueprints with the pencil sketches on them?

Objected to, as the testimony already given by him on this point is plain.

A. I meant, of course, the last few years. Of course

I saw the blueprints when I made them, and as to the pencil sketches I thought, as I have testified, that it is altogether likely, and was under the impression that Mr. Hunter made them when he was telling me about making the changes.

R-D-Q. 100. You said in reply to X-Q. 62 that you told Mr. Walker at the Wilmington interview that you had not seen any of the drawings or copies of the drawings, but in reply to X-Q. 31 you stated that at the earlier interview between you and Mr. Betts and Mr. Chambers a Patent Office copy of the Liddell patent No. 558,969 was shown you by those gentlemen. Please, therefore, to explain that apparent discrepancy between those two answers?

A. I think that what Mr. Walker was asking me at that time was the original Liddell drawings that I made the Patent Office drawings from, when I said I hadn't seen any drawings; and I couldn't have had in view or in mind that I did see a drawing, namely the photolithographic copy which was in answer to this last question, and that I testified I saw.

R-D-Q. 101. Am I right in understanding that at the Wilmington interview, you meant to tell Mr. Walker that you had not seen the original drawing before it was changed, nor any copy thereof in recent years, whereas in reply to X-Q. 31 you admitted that you had seen a Patent Office copy of the Liddell patent, and which Patent Office copy includes a copy of the original drawing after it was changed?

A. What I meant by my answer was, at the time we were speaking of drawings at Wilmington, I meant the original drawing of Liddell's from which I made his first set of drawings.

R-D-Q. 102. Now I call your attention to the pencil sketches on the first blueprint, and to the statements you have made in this deposition about the origin of those

pencil sketches. In your answer to Q. 7, you stated that those pencil sketches were made by Mr. Hunter in your presence, as I understand that answer; and in your answer to Q. 10, which was confined to that precise point, you said that your recollection is that you were present when Mr. Hunter made those pencil sketches. But in your answer to X-Q. 76 you said that you could not swear that you did not make those pencil sketches yourself, though in you answer to X-Q. 77 you say that they certainly have the appearance of Mr. R. M. Hunter's sketches as you know them. Now, Mr. Hunter has testified that he made those pencil sketches himself, as a partial means, at least, of showing how to change the drawing from which the first blueprint was made, to the condition which that drawing had when the second blueprint was made; and the fact that he made those pencil sketches for that purpose is an undisputed point in the case. Now, the only remaining question to be cleared up about those pencil sketches is the following: Did Mr. Hunter make those pencil sketches on the first blueprint in your presence on the one hand; or, on the other hand, did he make them in your absence and deliver the blueprint to you or show the blueprint to you with the pencil sketches already made thereon? Now, please to refresh your recollection on this exact point, and state what that recollection is at this time, independent of what that recollection may have been at some earlier time, during the giving of this deposition?

Objected to as the testimony of the witness already given fully covers his recollection on this point also objected to as leading.

A. My only recollection is, as I have said, and taken from Mr. Hunter's method of giving me instructions, is that those pencil sketches were made while I was there, and he was telling me what changes to make on the drawing.

R-D-Q. 103. When you first saw those pencil sketches and when Mr. Hunter, by the aid of those sketches, was telling you or showing you how to change the drawing; did he at the same time present to you the pencil drawing on Manila paper which you have repeatedly mentioned in the course of this deposition; on the one hand, or on the other hand, did he send you or give you or show you that Manila drawing at some later time than when you first saw those pencil sketches?

Objected to as leading.

A. As I have testified, he made the drawing after I told him that I could not make the changes from those pencil sketches; so, as I said, it must have been—probably was two or three days after, that he gave me the drawing.

R-D-Q. 104. In your reply to Q. 8 you stated that Mr. Hunter "saw that cams with intermittent movement would have to be substituted, and he developed a cam shown in the second blueprint, and I changed the drawing to suit." Or at least that is the way the language appears to be written down by the typewriter operator. Now, I call your attention to the fact that in the first place that statement speaks of "cams" in the plural number, whereas in the second place and in the same connection that statement speaks of "a cam," in the singular number. To clear up this apparent discrepancy, I ask you to state now, whether Mr. Hunter developed two cams with an intermittent movement in place of the two eccentric gears of the first blueprint, on the one hand; or whether, on the other hand, he developed only one cam, as a means of producing an intermittent movement in place of the continuous rotary movement which must result from the two eccentric gears of the first blueprint?

A. Mr. Hunter developed all it was necessary to make the change complete; cams, rods, and levers, and everything just as it shows in the second blueprint.

RE-DIRECT EXAMINATION CLOSED.

Re-cross examination by Mr. Betts:

R-X-Q. 105. What has become of the Manila drawing you say Mr. Hunter gave you, at some time in connection with the making or correcting the Liddell drawing?

A. I don't know anything about it.

R-X-Q. 106. When did you last see it?

A. I don't remember?

R-X-Q. 107. What did it contain?

A. As I have stated, it contained the cams and changes that I made, and which are shown in the second blueprint.

R-X-Q. 108. Give me the exact date when Mr. R. M. Hunter handed you that Manila drawing?

Objected to as not cross-examination, no direct or re-direct question having been put to the witness in respect of the date inquired of, and the witness not having attempted to fix the date when the pencil sketches were made upon the first blueprint nor the date when the Manila drawing was delivered to him nor any other date connected with the changes made by him in the drawing.

The objection is objected to as leading.

A. I do not know any date.

R-X-Q. 109. Did you see Mr. Liddell in Philadelphia at Mr. Hunter's office on January 7th, 1896, or do you remember whether you did or not?

This question is objected to because it is the first mention in this deposition of January 7, 1896, in any connection whatever, and because the witness might as well be asked if he saw Mr. Liddell on January 7, 1897, or February 7, 1896, or any other arbitrary date.

Objection objected to as leading.

A. I have no recollection of seeing Mr. Liddell at any time.

R-X-Q. 110. Did not Mr. Liddell bring to you certain sketches with reference to your making the drawing for this application about which you have been testifying, and bring them to your office in Philadelphia?

Objected to as not cross-examination, it relating to a period of time long prior to any event inquired of in the direct examination or in the re-direct examination.

Objection objected to as very leading and suggestive to the witness.

Mr. Walker submits to the Court that Mr. Betts has no right whatever to put leading questions to this witness, or any other question to this witness, during this deposition, relevant to matters which occurred, if they occurred at all, long prior to any event inquired of in the direct examination, or in the re-direct examination; and Mr. Walker notifies Mr. Betts that in putting such questions to the witness, he is endorsing the reliability of the witness, and disqualifying himself to question the correctness of the testimony of the witness, by making the witness his own.

Plaintiff's counsel objects to the first part of the above statement as leading and suggestive to the witness.

A. I do not know that he did.

R-X-Q. 111. Well, do you know that he did not?

Same objection.

A. I do not.

R-X-Q. 112. Will you swear that you never saw Mr. William Liddell?

A. No, I couldn't do that.

R-X-Q. 113. Will you swear that you ever did see him to know him?

A. No, I could not.

R-X-Q. 114. Are you able to swear whether he did or did not, in the fall of 1895, personally hand to you any drawings or sketches for the purpose of your making drawings therefrom, some of which drawings of yours were the drawings from which the first and second blueprints you have to-day testified about were taken.

Objected to as not cross examination.

A. I am not able to swear at this time.

R-X-Q. 115. Well, you got drawings and sketches from which you made Patent Office drawings for this Liddell application we are talking about from some source: Now, was it from William Liddell personally, or from R. M. Hunter personally, or from Ernest H. Hunter personally, or by mail, district messenger boy, office boy, or how, where, from whom?

A. I am under the impression that Mr. Hunter, Mr. E. H. Hunter, sent Mr. Liddell down to my office with Mr. Liddell's working drawings, and Mr. Liddell explained those drawings to me, and I made the Patent Office drawings from them; in fact, I am pretty sure of having some interview with Mr. Liddell with the drawings, but at this time I cannot be positive enough to swear to that. It may have been that Mr. Ernest Hunter called me up to his office, and explained the drawings with Mr. Liddell there.

R-X-Q. 116. But now you are quite sure you did see Mr. Liddel personally, either at your office or at Mr. Hunter's office in Philadelphia, in connection with Mr. Liddell's sketches of drawings and before you began to make the Patent Office drawings for his application; is that so?

A. As I have just said, I think I saw Mr. Liddell under the circumstances as I have stated; but at this time I am not positive of that.

R-X-Q. 117. Then when you stated in answer to

R-X-Q. 109 "I have no recollection of seeing Mr. Liddell at any time" you were making a statement that was not accurate to the best of your present recollection. How is that?

Objected to as implying inconsistency between the two answers of the witness in the total absence of any such inconsistency; and as therefore misleading.

A. That is just exactly what I mean, that I have no positive recollection of seeing Mr. Liddell; but think it altogether likely that I did see him.

R-X-Q. 118. Well, you have no positive recollection of seeing Mr. R. M. Hunter make those pencil marks on the first blueprint, but you think it altogether likely he did make them in your presence; is that about it?

This question is objected to as an attempt on the part of the counsel to frame to suit himself. the testimony of the witness upon a point about which the witness has already framed his own testimony completely.

Objection objected to as very leading and suggestive to the witness.

A. That's about it.

Re-direct examination by Mr. Walker:

R-D-Q. 119. Mr. Betts succeeded in his last question in getting you to say that his formulation of your recollection was "about" right. Now, a statement may be "about" right and still not be substantially right, because the word "about" is very ambiguous; and therefore I ask you to frame your own testimony and meaning on this subject, exactly to suit yourself, and to state your best recollection as to whether you were present or were absent when Mr. Hunter made the pencil sketches on the first blueprint?

Objected to as an attempt to make the witness swear to something of which he has no real positive recollection, as to which he can testify under oath; and complainant's counsel further objects that the testimony already taken of this witness fairly shows his recollection or want of recollection on the subject.

Mr. Betts also objects to the witness being led, or rather dragged into statements beyond the real recollection.

Mr. Walker strenuously objects to the assertion of Mr. Betts, that the witness has no real positive recollection upon a particular point, because that statement cannot be known by Mr. Betts to be true, inasmuch as he is not operating with the brain of the witness, but with his own brain, and cannot know what the witness recollects or does not recollect; and Mr. Walker calls the attention of the Court to the fact that his questions to the witness on this subject have all been entirely fair opportunities to the witness to tell his own story upon the point, whereas Mr. Bett's questions have all been attempts to beguile the witness into endorsing his phraseology, instead of letting the witness frame his own statements.

Plaintiff's counsel objects to the above statement of defendant's counsel as leading and suggestive to the witness.

A. As I have said, it would be right in line with Mr. Hunter's practice and his method of instructing me, to make those sketches on that blueprint, so as to explain to me the changes that would be necessary, and that were made on and shown in the second blueprint.

HENRY DRURY.

1875-6

1872

p. 1875

CERTIFICATE OF CLERK OF CIRCUIT COURT.

Clerk's Certificate.

UNITED STATES OF AMERICA, *District of Maine, ss:*

I, James E. Hewey, Clerk of the Circuit Court of the United States for the District of Maine, hereby certify that the seven volumes, entitled as follows:

Volume I., Complainant's Record, Prima Facie Proofs;
Volume II., Complainant's Record, Answering Proofs;
Volume III., Complainant's Record, Exhibit Book;
Volume IV., Defendant's Record, Continental Record, Volume I., Answer and Evidence;
Volume V., Defendant's Record, Continental Record, Volume II., U. S. Patents;
Volume VI., Defendant's Record, Continental Record, Volume III., Exhibits;
Volume VII., Proceedings in Circuit Court;

this certificate being attached to each of said volumes, contain and are a true copy of the record and all proceedings of said Circuit Court in the cause in equity entitled,

No. 546.

EASTERN PAPER BAG COMPANY, Complainant,
v.
CONTINENTAL PAPER BAG COMPANY, Defendant,

in said Circuit Court determined, the Petition for Appeal, Assignment of Errors, Supersedeas Bond on Appeal, Bond on Appeal, Opinion of the Circuit Court, and also the original Citation with acknowledgment of service thereon.

Witness my hand and the seal of said Circuit Court this thirty-first day of January, A. D. 1906.

[SEAL.] JAMES E. HEWEY, *Clerk.*

1874

2601 United States Circuit Court of Appeals for the First Circuit, October Term, 1905.

No. 635.

CONTINENTAL PAPER BAG COMPANY, Defendant, Appellant,
v.
EASTERN PAPER BAG COMPANY, Complainant, Appellee.

Volume VII.

PROCEEDINGS IN CIRCUIT COURT.

Transcript of Record of Circuit Court.

[Filed in Circuit Court of Appeals February 1, 1906.]

UNITED STATES OF AMERICA, *District of Maine, ss:*

At a Circuit Court of the United States of America for the First Circuit, begun and holden at Portland, within and for the District of Maine, on the third Tuesday of September, to wit, the nineteenth day of September, in the year of our Lord nineteen hundred and five.

Before Honorable Clarence Hale, District Judge.

No. 546. Equity.

EASTERN PAPER BAG COMPANY, Complainant,
v.
CONTINENTAL PAPER BAG COMPANY, Defendant.

On the eleventh day of October, A. D. 1901, Betts, Betts, Sheffield & Betts, solicitors, filed the following Bill of Complaint:—

2602 *Bill of Complaint.*

[Filed October 11, 1901.]

[MEMORANDUM.—The Bill of Complaint, as printed in this Transcript of Record, commencing on page 1, Volume I., is here inserted, but is omitted in printing this record.—JOHN G. STETSON, *Clerk.*]

Whereupon a subpœna in chancery issues returnable on the first Monday of November next ensuing, which is returned by the marshal of this district, duly executed, and said cause is entered in court.

And on the second day of December, A. D. 1901, there is filed the following Answer:—

Defendant's Answer.

[Filed December 2, 1901.]

[MEMORANDUM.—The Answer, as printed in this Transcript of Record, commencing on page 9, Volume I., and on page 1, Volume IV., is here inserted, but is omitted in printing this record.—JOHN G. STETSON, *Clerk.*]

And on the fourth day of January, A. D. 1902, there is filed the following Replication:—

Replication.

[Filed January 6, 1902.]

[MEMORANDUM.—The Replication, as printed in this Transcript of Record on page 14, Volume I., is here inserted, but is omitted in printing this record.—JOHN G. STETSON, *Clerk.*]

Said cause is continued from term to term to the September Term, 1902, when on the second day of March, A. D. 1903, there is filed the following

Notice and Motion to Amend Answer.

To Betts, Betts, Sheffield & Betts, Solicitors for Complainant in the above entitled cause:

Please take notice that on Monday, March 2, 1903, at two o'clock in the afternoon, or as soon thereafter as counsel can be heard, the following motion to be permitted to file the following amend-
2603 ment to defendant's answer in the above-entitled cause, and to be given the months of March and April, 1903, in which to take evidence in support of that amendment to the answer, will be presented to the United States Circuit Court for the District of Maine, or to one of the judges thereof, sitting in the United States Court House in Portland, Maine.

And please also to take notice that the said motion will be supported by the affidavit of William Liddell, of February 2, 1903 (a copy of which was delivered to you February 16, 1903), and by the affidavit of Wilbur M. Stone, of February 17, 1903 (a copy of which was delivered to you February 19, 1903), and by the affidavit of Herman Elsas, of February 19, 1903 (a copy of which was delivered to you February 19, 1903), and by the affidavits of Albert H. Walker and Charles D. King, of February 24, 1903 (a copy of each of which was delivered to you February 24, 1903).

Manhattan, New York, February 24, 1903.

ALBERT H. WALKER,
Defendant's Counsel.

Service is hereby admitted of the foregoing notice, and of the accompanying motion, and proposed amendment to the answer, in the above-entitled cause, and also copies of the foregoing affidavits are acknowledged to have been received by complainant's counsel on the days specified in said notice, respectively.

BETTS, BETTS, SHEFFIELD & BETTS,
Solicitors for the Complainant.

February 24, 1903.

Now comes the defendant by its solicitor and counsel and moves the court as follows:—

First. That it be permitted to amend its answer by filing the proposed amendments thereto, which is annexed to this motion.

Second. That the defendant be permitted to take testimony and other evidence in support of the said amendment to its answer during the month of March, 1903.

ALBERT H. WALKER,
Defendant's Counsel.

And on the same day, by consent, there is filed and allowed the following

2604 *Amendment to Answer.*

Now comes the defendant (and by special leave of the court, upon motion and cause shown, after due notice to the complainant, supported by affidavits) and amends the defendant's answer by adding thereto the following paragraphs:—

"The defendant says, on information and belief, that said Liddell Letters Patent No. 558,969, are void, because William Liddell was not the original, first and sole inventor of the combination claimed in any claim of said Letters Patent; and because that sub-combination of each of those combinations which is designated in Claims 1, 2, 3, 4 and 7 of said patent as 'operating means for the forming plate adapted to cause the plate to oscillate about its rear edge upon the surface of the cylinder during the rotary movement of said cylinder,' and which is designated in Claims 5 and 6 of said Letters Patent as 'power devices for oscillating the said forming plate upon the movable frame, so that its rear edge travels in conjunction with and at the same rate of speed as the cylinder' (and which sub-combination is shown in the drawings of said patent to consist of the cam K′, the cam K, the arm F′, the arm F, the rod *k*, the link *k*2, the arm connecting that link to the gear M′, and also that gear M′, the upper gear M, the lower gear M, and the gear N), was never invented or planned by William Liddell, but was contrived by some other person without his knowledge, and was inserted in the combination of each of the claims in the Letters Patent, and in the description and drawings of that patent, without his direction or procurement; and because the said sub-combination, thus contrived and introduced into the Liddell patent by some person other than William Liddell, is

the most essential and only distinctive part of the mechanism described in that patent and delineated in the drawings thereof.

"The defendant says, on information and belief, that said Liddell Patent No. 558,969 is void, because Rudolph M. Hunter, or some other person other than William Liddell, participated in inventing the combination which is claimed in Claim 1, and the combination which is claimed in Claim 2, and the combination which is claimed in Claim 3, and the combination which is claimed in Claim 4,
2605 and the combination which is claimed in Claim 5, and the combination which is claimed in Claim 6, and the combination which is claimed in Claim 7 of said Letters Patent."

All of which statements and defences this defendant is ready to aver, maintain and prove as this Honorable Court shall direct; and it again prays hence to be dismissed with its costs in this behalf sustained.

In witness whereof the said defendant, the Continental Paper Bag Company, has duly executed this answer, and has hereunto affixed its corporate seal and caused the same to be attested by its secretary.

[SEAL.] CONTINENTAL PAPER BAG CO.
HERMAN ELSAS, *President.*

Attest:
I. KUHE, *Secretary.*
ALBERT H. WALKER,
Defendant's Counsel.

Said cause is then continued from term to term to the September Term, A. D. 1904, when, publication having been ordered, said cause comes on for hearing and is fully heard before Putnam, J., and the same having been again continued to this September Term, A. D. 1905, on the ninth day of October, A. D. 1905, It is ordered that there be an interlocutory decree, in accordance with Rule 21, for an injunction and a master on Claims 1, 2 and 7.

And on the twenty-fourth day of said October, there is filed the following

Petition for Rehearing.

Now comes the above-named defendant, the Continental Paper Bag Company, and petitions and prays the Court to grant a rehearing of the above-entitled cause for matter apparent on the face of the record thereof; which matter consists in twenty-six material errors, which are apparent on the face of the opinion of the Court which was filed October 9, 1905; and which opinion concluded by ordering an interlocutory decree for the complainant; and which errors were the following:—

First. The Court erred in adjudging that the defendant has infringed Claims 1, 2 and 7 of the Liddell Letters Patent No. 558,969, of April 28, 1896, and in not adjudging that the defendant has not infringed said Letters Patent.

2606 *Second.* The Court erred in holding that nineteen certain prior patents, on machines for doing the same work as the

Liddell patent No. 558,969, of April 28, 1896, have no effect either in narrowing or broadening the alleged invention of that patent; the said nineteen prior patents being the following:—

No. 242,661, to Leinbach, Wolle & Brunner, of June 7, 1881.
No. 327,280, to Leinbach, Wolle & Brunner, of September 29, 1885.
No. 331,722, to Lorenz & Honiss, of December 1, 1885.
No. 333,647, to Lorenz & Honiss, of January 5, 1886.
No. 337,965, to Lorenz & Honiss, of March 16, 1886.
No. 337,966, to Lorenz & Honiss, of March 16, 1886.
No. 361,951, to Lorenz & Honiss, of April 26, 1887.
No. 387,573, to Appel, of August 7, 1888.
No. 407,794, to Stilwell, of July 30, 1889.
No. 410,841, to Lorenz & Claussen, of September 10, 1889.
No. 410,842, to Lorenz & Honiss, of September 10, 1889.
No. 411,544, to Claussen & Mortson, of September 24, 1889.
No. 417,346, to Stilwell, of December 17, 1889.
No. 439,703, to Taylor, of November 4, 1898.
No. 439,843, to Kelliher, of November 4, 1890.
No. 446,839, to Patterson, of February 17, 1891.
No. 534,512, to Lorenz & Claussen, of February 19, 1895.
No. 540,556, to Murchie, of June 4, 1895.
No. 542,447, to Pettee, of July 9, 1895.

Third. The Court erred in holding that "Liddell's alleged invention covered every method of combining the rotating cylinder with the forming plate, by causing the plate to oscillate about its rear edge, on the surface of the cylinder, and that the claims are as broad as the invention," as thus described.

Fourth. The Court erred in holding that the respondent was in error, in contending that recourse must be had to the descriptive part of the specification, to ascertain what "operating means" are meant by certain language of each of Claims 1, 2 and 7 of the Liddell patent, which language is as follows: "Operating means for the forming plate, adapted to cause said plate to oscillate about its rear edge upon the surface of the cylinder, during the rotary movement of said cylinder."

Fifth. The Court erred in ignoring the fact that "the forming plate oscillating about its rear edge" is shown and described
2607 in the Lorenz & Honiss patent No. 337,966, of March 16, 1886, and in implying the absence of such a forming plate from the prior art.

Sixth. The Court erred in holding that "the identity of functions of the two mechanisms" (of the defendant's machine and of the Liddell patent) "is the entire substance on this question of infringement."

Seventh. The Court erred in holding that "so far as the real novelty of the claims in suit are concerned, we have nothing to do with the particular mechanism."

Eighth. The Court erred in holding that "the claims in issue require only that the forming plate shall oscillate about its rear edge upon the surface of the cylinder."

Ninth. The Court erred in holding that "neither the invention nor the claims involve any particular method or mechanism, by which the oscillating about the rear edge is accomplished."

Tenth. The Court erred in holding that the rotating conveyor and its oscillating carriers, in the defendant's machine, constitute an equivalent of the rotating cylinder of the Liddell patent No. 558,969.

Eleventh. The Court erred in holding that defendant is estopped, by a certain use of the word "cylinder" in the Claussen patent No. 598,497, from contending for a different meaning for that word in the Liddell patent No. 558,969.

Twelfth. The Court erred in holding that the Liddell patent No. 558,969, of April 28, 1896, is entitled to priority over the Claussen invention of November, 1895, as that invention is shown in Claussen Exhibits Nos. 1, 3 and 5, and as it was developed into the Claussen patent No. 598,497, of February 8, 1898, and as it was embodied in the defendant's machine which the Court held to infringe the Liddell patent No. 558,969.

Thirteenth. The Court erred in holding that the said Claussen invention is not entitled to a date earlier than January 17, 1896.

Fourteenth. The Court erred in holding that from September 23, 1895, to January 7, 1896, "Liddell was constantly working towards the production of a patent."

Fifteenth. The Court erred in holding that "there is nothing in the record to show that prior to January 17, 1896, Claussen
2608 had any purpose whatever of bringing his conception, in whatever condition it was, to a practical result."

Sixteenth. The Court erred in holding that the word "forming-plate" both inherently, and in connection with the Liddell patent, means something very much more than the tucker-plate described by Claussen in the sketch of November 6, 1895.

Seventeenth. The Court erred in holding that the issue between Liddell and Claussen is the question whether the doings of Claussen, prior to January 7, 1897, amounted to what must negative the novelty of the Liddell patent No. 558,969, instead of holding that issue to be between the two patented inventions, in respect of the respective dates of the origins of those two inventions, and in respect of the question whether laches intervened to deprive either of those inventions of the benefit of the date of its origin, and in respect of the question as to which of those two patented inventions is entitled to seniority in the art to which they both belong.

Eighteenth. The Court erred in holding that the invention of Claussen, which is patented in the Claussen patent No. 598,497, and is embodied in the defendant's machine, is not entitled to date back to November 6, 1895.

Nineteenth. The Court erred in not holding that the Claussen invention, which is embodied in the defendant's machine, is not chargeable with infringement of the Liddell patent No. 558,969; because that Claussen invention is older in the eye of the law than any invention claimed in that Liddell patent.

Twentieth. The Court erred in not adjudging Claims 1, 2 and 7 of the Liddell patent No. 558,969 (as construed by the Court) to be

void for want of invention, in view of the prior patents to Lorenz & Honiss, No. 333,647, of January 5, 1886, and No. 337,966, of March 16, 1886.

Twenty-first. The Court erred in not adjudging said Letters Patent No. 558,969 to be void, because William Liddell was not the original, first and sole inventor of the combination claimed in any claim of said Letters Patent.

Twenty-second. The Court erred in not adjudging said Letters Patent No. 558,969 to be void, because that said sub-combination of the combination of each of the claims of said Letters
2609 Patent, which is designated in Claims 1, 2, 3, 4 and 7 of said patent as "operating means for the forming plate, adapted to cause the said plate to oscillate about its rear edge upon the surface of the cylinder, during the rotary movement of said cylinder," and which is designated in Claims 5 and 6 of said Letters Patent as "power devices for oscillating the said forming plate upon the movable frame, so that its rear edge travels at the same speed as the cylinder" (and which sub-combination is shown in the drawings of the said patent to consist of the cam K1 the cam K, the arm F1, the arm F, the rod *k*, the link *k*2, the arm connecting that link to the gear M1, and also that gear M1, the upper gear M, the lower gear M and the gear N) was never invented or planned by William Liddell, but was contrived by Rudolph M. Hunter without the knowledge of William Liddell, and was inserted by Rudolph M. Hunter in the combination of each of the claims of said Letters Patent, and in the description and drawings of that patent, without the direction or procurement of William Liddell, and because the said sub-combination, thus contrived and introduced into the Liddell patent by Rudolph M. Hunter, is the most essential and only distinctive part of the mechanism described in that patent, and delineated in the drawings thereof.

Twenty-third. The Court erred in not adjudging said Letters Patent No. 558,969 to be void, because Rudolph M. Hunter participated in inventing the combination which is claimed in Claim 1, and the combination which is claimed in Claim 2, and the combination which is claimed in Claim 3, and the combination which is claimed in Claim 4, and the combination which is claimed in Claim 5, and the combination which is claimed in Claim 6, and the combination which is claimed in Claim 7 of said Letters Patent.

Twenty-fourth. The Court erred in not adjudging Letters Patent No. 558,969 to be void, because it was never based on any invention of William Liddell, the applicant therefor, but was based upon a forged and fraudulent specification, which was inserted by Rudolph M. Hunter, without the consent or approval or knowledge of William Liddell, between two sheets of paper which had been
2610 signed by William Liddell when they enclosed a different specification for a different invention.

Twenty-fifth. The Court erred in holding that no alleged infringer should be permitted to collaterally attack a patent on the basis of fraud in its procurement.

Twenty-sixth. The Court erred in holding that if a patent is issued

in accordance with the regulations of the United States, no matter to whom, no infringer has any right to infringe that patent.

Wherefore your petitioner prays the Court to rehear the said cause; and thereupon to cancel the said order for an interlocutory decree in favor of the complainant; and thereupon to order a final decree in said cause, dismissing the complainant's bill of complaint with costs in favor of the defendant.

THE CONTINENTAL PAPER BAG CO., *Defendant.*

ALBERT H. WALKER,
JOSEPH W. SYMONDS,
D. W. SNOW,
Defendant's Counsel.

We humbly conceive that this petition for a rehearing of this cause for matter apparent on the face of the record is a proper petition to be presented and to be granted, and that the Court may properly reconsider all the questions which are involved in the above specified twenty-six suggestions of error.

ALBERT H. WALKER,
JOSEPH W. SYMONDS,
DAVID W. SNOW,
Counsel.

And on the thirtieth day of said October, the Court having fully considered the petition for rehearing filed by the respondent and finding thereupon that the Court does not desire that the case should be reheard, It is

Ordered, Putnam, J., that the petition for rehearing, filed October 24, 1905, is denied.

And on the twenty-eighth day of December, A. D., 1905, there is entered and filed the following

2611 *Interlocutory Decree.*

This cause came on to be heard at this term, upon the pleadings and proofs, and was argued by counsel for the respective parties; and thereupon, upon consideration thereof:—

It is ordered, adjudged and decreed, as follows, viz., that the Letters Patent, referred to in the complainant's bill, being Letters Patent of the United States, granted unto William Liddell, assignor of the complainant, the Eastern Paper Bag Company, dated April 28, 1896, No. 558,969, for improvements in paper bag machines, are good and valid in law as to the first, second and seventh claims thereof, being the claims proceeded upon by complainant, and that the complainant, the Eastern Paper Bag Company, is the sole and exclusive owner of said Letters Patent; and that the said William Liddell was the original and first inventor of the improvements described and claimed in said first, second and seventh claims; and that the said respondent, the Continental Paper Bag Company, has infringed the

first, second and seventh claims of said patent, and upon the exclusive rights of the complainant under the same.

And It is further ordered, adjudged and decreed that the complainant recover of the said Continental Paper Bag Company the profits which it has received or made, or which have accrued to it from said infringement or infringements of the improvements described in and secured by said first, second and seventh claims of said Letters patent, at any and all times since the twenty-eighth day of April, eighteen hundred and ninety-six, and, in addition thereto, the damages which the complainant has sustained thereby.

And It is further ordered, adjudged and decreed that Albert S. Woodman, Esq., of Portland, in said district, be appointed a special master of this court to take and report to the Court an account of the profits aforesaid which the said Continental Paper Bag Company has received, or which have arisen or accrued to it, from the infringement or infringements of the said patented inventions, so far as concerns said first, second and seventh claims, as alleged in the bill as aforesaid, and to ascertain and report the damages, if any, in addition to the profits which the complainant has sustained thereby since said twenty-eighth day of April, eighteen hundred and ninety-six.

2612 And It is further ordered, adjudged and decreed that a perpetual injunction be issued against the Continental Paper Bag Company, according to the prayer of the bill, so far as relates to said first, second and seventh claims.

And It is further ordered, adjudged and decreed that all questions as to costs and statutory increase of damages are reserved for further direction.

By the Court,

JAMES E. HEWEY, *Clerk.*

A true record:
Attest: JAMES E. HEWEY, *Clerk.*

Petition for Appeal.

[Filed January 20, 1906.]

To the Honorable the Judges of the Circuit Court of the United States for the District of Maine:

The above-named defendant, the Continental Paper Bag Company, conceiving itself aggrieved by the interlocutory decree made and entered in the above-entitled cause, on the twenty-eighth day of December, nineteen hundred and five, hereby appeals from said decree to the United States Circuit Court of Appeals for the First Circuit, for the reasons which are stated in the assignment of errors which is filed herewith; and the said defendant prays that this appeal may be allowed, and that a citation may be granted, directed to the above-named complainant, commanding it to appear before the United States Circuit Court of Appeals for the First Circuit, to do and to receive whatever may appertain to justice in the premises;

and that a transcript of the record, proceedings and papers upon which said decree was based may be duly authenticated and sent to the said Circuit Court of Appeals, together with all the original papers, drawings and other exhibits which were put in evidence in said case, and which are now in the custody of this court; and that an order may be made for the safe keeping, transportation and return of said original papers and drawings and said exhibits.

CONTINENTAL PAPER BAG COMPANY,
By ALBERT H. WALKER,
Its Counsel.

2613 *Assignment of Errors.*

[Filed January 20, 1906.]

Now comes the above-named defendant, the Continental Paper Bag Company, and presents, with its accompanying petition of appeal from the interlocutory decree made and entered in this case, on the twenty-eighth day of December, nineteen hundred and five, the following assignment of errors:—

First. The Court erred in adjudging that the defendant has infringed Claims 1, 2 and 7 of the Liddell Letters Patent No. 558,969, of April 28, 1896; and in not adjudging that the defendant has not infringed said Letters Patent.

Second. The Court erred in holding that nineteen certain prior patents, on machines for doing the same work as the Liddell patent No. 558,969, of April 28, 1896, have no effect either in narrowing or broadening the alleged invention of that patent, the said nineteen prior patents being the following:—

No. 242,661, to Leinbach, Wolle & Brunner, of June 7, 1881.
No. 327,280, to Leinbach, Wolle & Brunner, of September 29, 1885.
No. 331,722, to Lorenz & Honiss, of December 1, 1885.
No. 333,647, to Lorenz & Honiss, of January 5, 1886.
No. 337,965, to Lorenz & Honiss, of March 16, 1886.
No. 337,966, to Lorenz & Honiss, of March 16, 1886.
No. 361,951, to Lorenz & Honiss, of April 26, 1887.
No. 387,573, to Appel, of August 7, 1888.
No. 407,794, to Stilwell, of July 30, 1889.
No. 410,841, to Lorenz & Claussen, of September 10, 1889.
No. 410,842, to Lorenz & Honiss, of September 10, 1889.
No. 410,544, to Claussen & Mortson, of September 24, 1889.
No. 417,346, to Stilwell, of December 17, 1889.
No. 439,703, to Taylor, of November 4, 1890.
No. 439,843, to Kelliher, of November 4, 1890.
No. 446,839, to Patterson, of February 17, 1891.
No. 534,512, to Lorenz & Claussen, of February 19, 1895.
No. 540,556, to Murchie, of June 4, 1895.
No. 542,447, to Pettee of July 9, 1895.

THIRD. The Court erred in holding that "Liddell's alleged invention covered every method of combining the rotating cylinder with the forming plate, by causing the plate to oscillate about its
2614 rear edge, on the surface of the cylinder, and that the claims are as broad as the invention," as thus described.

FOURTH. The Court erred in holding that the respondent was in error in contending that recourse must be had to the descriptive part of the specification, to ascertain what "operating means" are meant by certain language of each of Claims 1, 2 and 7 of the Liddell patent which language is as follows: "operating means for the forming plate, adapted to cause said plate to oscillate about its rear edge upon the surface of the cylinder, during the rotary movement of said cylinder."

FIFTH. The Court erred in ignoring the fact that "the forming plate oscillating about its rear edge" is shown and described in the Lorenz and Honiss patent No. 337,966, of March 16, 1886, and in implying the absence of such a forming plate from the prior art.

SIXTH. The Court erred in holding that "the identity of functions as between the two mechanisms" (of the defendant's machine and of the Liddell patent) "is the entire substance on this question of infringement."

SEVENTH. The Court erred in holding that "so far as the real novelty of the claims in suit are concerned, we have nothing to do with the particular mechanism."

EIGHTH. The Court erred in holding, that "the claims in issue require only that the forming plate shall oscillate about its rear edge upon the surface of the cylinder."

NINTH. The Court erred in holding that "neither the invention nor the claims involve any particular method or mechanism, by which the oscillating about the rear edge is accomplished."

TENTH. The Court erred in holding that the rotating conveyor, and its oscillating carriers, in the defendant's machine, constitute an equivalent of the rotating cylinder of the Liddell patent No. 558,969.

ELEVENTH. The Court erred in holding that defendant is estopped, by a certain use of the word "cylinder" in the Claussen patent No. 598,497, from contending for a different meaning for that word in the Liddell patent No. 558,969.

TWELFTH. The Court erred in holding that the Liddell patent No. 558,969, of April 28, 1896, is entitled to priority over the
2615 Claussen invention of November, 1895, as that invention is shown in Claussen Exhibits Nos. 1, 3 and 5, and as it was developed into the Claussen patent No. 598,497, of February 8, 1898, and as it was embodied in the defendant's machine which the Court held to infringe the Liddell patent No. 558,969.

THIRTEENTH. The Court erred in holding that the said Claussen invention is not entitled to a date earlier than January 17, 1896.

FOURTEENTH. The Court erred in holding that from September 23, 1895, to January 7, 1896, "Liddell was constantly working towards the production of a patent."

FIFTEENTH. The Court erred in holding that "there is nothing

in the record to show that prior to January 17, 1896, Claussen had any purpose whatever, of bringing his conception, in whatever condition it was, to a practical result."

SIXTEENTH. The Court erred in holding that the word "forming-plate," both inherently and in connection with the Liddell patent, means something very much more than the tucker-plate described by Claussen in the sketch of November 6, 1895."

SEVENTEENTH. The Court erred in holding that the issue between Liddell and Claussen is the question whether the doings of Claussen, prior to January 7, 1897, amounted to what must negative the novelty of the Liddell patent No. 558,969, instead of holding that issue to be between the two patented inventions, in respect of the respective dates of the origins of those two inventions, and in respect of the question whether laches intervened to deprive either of those inventions of the benefit of the date of its origin, and in respect of the question as to which of those two patented inventions is entitled to seniority in the art to which they both belong.

EIGHTEENTH. The Court erred in not holding that the invention of Claussen, which is patented in the Claussen patent No. 598,497, and is embodied in the defendant's machine, is not entitled to date back to November 6, 1895.

NINETEENTH. The Court erred in not holding that the Claussen invention, which is embodied in the defendant's machine, is not chargeable with infringement of the Liddell patent No. 558,969, because that Claussen invention is older in the eye of the law than any invention claimed in that Liddell patent.

2616 TWENTIETH. The Court erred in not adjudging Claims 1, 2 and 7 of the Liddell patent No. 558,969 (as construed by the Court) to be void for want of invention, in view of the prior patents to Lorenz & Honiss, No. 333,647, of January 5, 1886, and No. 337,966, of March 16, 1886.

TWENTY-FIRST. The Court erred in not adjudging said Letters Patent No. 558,969 to be void, because William Liddell was not the original, first and sole inventor of the combination claimed in any claim of said Letters Patent.

TWENTY-SECOND. The Court erred in not adjudging said Letters Patent No. 558,969 to be void, because that sub-combination of the combination of each of the claims of said Letters Patent, which is designated in Claims 1, 2, 3, 4 and 7 of said patent as "operating means for the forming-plate, adapted to cause the said plate to oscillate about its rear edge upon the surface of the cylinder, during the rotary movement of said cylinder" and which is designated in Claims 5 and 6 of said Letters Patent as "power devices for oscillating the said forming-plate upon the movable frame, so that its rear edge travels at the same speed as the cylinder (and which sub-combination is shown in the drawings of the said patent to consist of the cam K′, the cam K, the arm F′, the arm F, the rod *k*, the link k^2, the arm connecting that link to the gear M′, and also that gear M′, the upper gear M, the lower gear M, and the gear N) was never invented or planned by William Liddell, but was contrived by Rudolph M. Hunter without the knowledge of William Liddell, and

was inserted by Rudolph M. Hunter in the combination of each of the claims of said Letters Patent, and in the description and drawings of that patent, without the direction or procurement of William Liddell, and because the said sub-combination, thus contrived and introduced into the Liddell patent by Rudolph M. Hunter, is the most essential and only distinctive part of the mechanism described in that patent, and delineated in the drawings thereof.

TWENTY-THIRD. The Court erred in not adjudging said Letters Patent No. 558,969 to be void, because Rudolph M. Hunter participated in inventing the combination which is claimed in Claim 1, and the combination which is claimed in Claim 2, and the combination which is claimed in Claim 3, and the combination which
2617 is claimed in Claim 4, and the combination which is claimed in Claim 5, and the combination which is claimed in Claim 6, and the combination which is claimed in Claim 7 of said Letters Patent.

TWENTY-FOURTH. The Court erred in not adjudging Letters Patent No. 558,969 to be void, because it was never based on any invention of William Liddell, the applicant therefor, but was based upon a forged and fraudulent specification, which was inserted by Rudolph M. Hunter, without the consent or approval or knowledge of William Liddell, between two sheets of paper which had been signed by William Liddell when they enclosed a different specification for a different invention.

TWENTY-FIFTH. The Court erred in holding that no alleged infringer should be permitted to collaterally attack a patent on the basis of fraud in its procurement.

TWENTY-SIXTH. The Court erred in holding that if a patent is issued in accordance with the regulations of the United States, no matter to whom, no infringer has any right to infringe that patent.

TWENTY-SEVENTH. The Court erred in adjudging that the complainant should recover from the defendant the profits which have accrued to it from infringement of Claims 1, 2 and 7 of said Letters Patent No. 558,969, and in addition thereto the damages which the complainant has sustained thereby.

TWENTY-EIGHTH. The Court erred in adjudging that a perpetual injunction should be issued against the Continental Paper Bag Company, according to the prayer of the bill, so far as it relates to said first, second and seventh claims of said Letters Patent No. 558,969.

TWENTY-NINTH. The Court erred in adjudging that an injunction should be issued against the Continental Paper Bag Company.

THIRTIETH. The Court erred in not dismissing the bill of complaint, with costs in favor of the defendant.

CONTINENTAL PAPER BAG COMPANY,
By ALBERT H. WALKER, *Attorney.*

2618 *Supersedeas Bond on Appeal.*

[Filed January 20, 1906.]

Know all men by these presents, That we, the Continental Paper Bag Company, a Maine corporation, as principal, are held and firmly bound unto the Eastern Paper Bag Company, Connecticut corporation, in the full and just sum of twenty thousand dollars, to be paid to the said Eastern Paper Bag Company, its certain attorney, executors, administrators, or assigns; to which payment, well and truly to be made, we bind ourselves, our heirs, executors, and administrators, jointly and severally, by these presents. Sealed with our seals and dated this eighteenth day of January, in the year of our Lord one thousand nine hundred and six.

Whereas, lately, at a term of the Circuit Court of the United States for the district of Maine, in a suit in equity depending in said court between the said Eastern Paper Bag Company, as the complainant, and the said Continental Paper Bag Company, as the defendant, a decree was entered against the said Continental Paper Bag Company, and the said Continental Paper Bag Company having obtained an appeal to remove said cause to the United States Circuit Court of Appeals for the First Circuit, to reverse the decree in the aforesaid suit, and a citation directed to the said Eastern Paper Bag Company, citing and admonishing said company to be and appear in the said United States Circuit Court of Appeals for the First Circuit, in the city of Boston, Massachusetts, on the first day of February, in the year of our Lord nineteen hundred and six.

Now, the condition of the above obligation is such, that if the said Continental Paper Bag Company shall prosecute the said appeal to effect, and answer all damages and costs if they fail to make said appeal good, then the above obligation to be void; else to remain in full force and virtue.

CONTINENTAL PAPER BAG CO., [SEAL.]
By HERMAN ELSAS, *Its President.*

Sealed and delivered in presence of
I. KUHE.

Approved:
W. L. PUTNAM,
Circuit Judge.

January 20, 1906.

STATE OF NEW YORK, *County of New York, ss:*

On this eighteenth day of January, in the year 1906, before me personally came Herman Elsas, to me known, who, being
2619 duly sworn, did depose and say that he resides in Manhattan, New York; that he is president of the Continental Paper Bag Company, which is the corporation which is described in, and which

executed the above instrument; that he knows the seal of said corporation; that the seal affixed to said instrument is such corporate seal; that it was so affixed by authority of the Board of Directors of said corporation; and that he signed his name to said instrument as such president, by like authority.

DAVID FISCHER,
Notary Public, 33.

[SEAL.]

Bond on Appeal.

[Filed January 20, 1906.]

Know all men by these presents, That the Continental Paper Bag Company, a Maine corporation, is held and firmly bound unto the Eastern Paper Bag Company, a Connecticut corporation, in the full and just sum of five hundred dollars, to be paid to the said Eastern Paper Bag Company, its successors and assigns; to which payment, well and truly to be made, the Continental Paper Bag Company binds itself, and its successors and assigns, jointly and severally, by these presents.

Sealed with the seal of the Continental Paper Bag Company, and dated this eleventh day of January, in the year of our Lord one thousand nine hundred and six.

Whereas, lately, at the September Term of 1905, of the Circuit Court of the United States for the District of Maine, in a suit in equity depending in said court, between the said Eastern Paper Bag Company, as complainant, and the said Continental Paper Bag Company, as defendant, an interlocutory decree granting an injunction was entered against the said defendant; and the said defendant having obtained an appeal to remove said cause to the United States Circuit Court of Appeals for the First Circuit, to reverse the decree in the aforesaid suit, and a citation directed to the said Eastern Paper Bag Company, citing and admonishing it to be and appear in the said United States Circuit Court of Appeals for the First Circuit, in the city of Boston, Massachusetts, on the first day of February, nineteen hundred and six.

Now, the condition of the above obligation is such, that if the said Continental Paper Bag Company shall prosecute its appeal to effect, and answer all costs if it fail to establish its appeal, then the above obligation to be void; else to remain in full force and virtue.

In witness whereof, the Continental Paper Bag Company, the corporation hereinbefore mentioned and described, has caused this instrument to be executed by its president, and has caused its
2620 corporate seal to be hereunto affixed, this eleventh day of January, 1906.

CONTINENTAL PAPER BAG CO., [SEAL.]
By HERMAN ELSAS, *Its President.*

Sealed and delivered in presence of
I. KUHE.

Approved:
W. L. PUTNAM,
Circuit Judge.

January 20, 1906.

STATE OF NEW YORK, *County of New York, ss:*

On this eleventh day of January, in the year 1906, before me personally came Herman Elsas, to me known, who, being duly sworn, did depose and say that he resides in Manhattan, New York; that he is president of the Continental Paper Bag Company, which is the corporation which is described in, and which executed the above instrument; that he knows the seal of said corporation; that the seal affixed to said instrument is such corporate seal; that it was so affixed by authority of the Board of Directors of said corporation; and that he signed his name to said instrument as such president, by like authority.

DAVID FISCHER,
Notary Public, 33.

[SEAL.]

Opinion of the Circuit Court.

October 9, 1905.

PUTNAM, *J.:*

This is a bill in equity alleging infringements of the first, second and seventh claims of the patent to William Liddell, stated therein to be for "an improvement in paper-bag machines," No. 558,969, issued on April 28, 1896, on an application filed on February 6, 1896. In line with the frankness with which the court has been dealt with, the respondent stated at the hearing that these three claims are so near alike that the question of infringement is the same in respect to all of them, as is also the question of validity; therefore we will confine our explanations to the first claim, which is as follows:—

"1. In a paper-bag machine, the combination of a rotating cylinder provided with one or more pairs of side-forming fingers
2621 adapted to be moved toward or from each other, a forming-plate also provided with side-forming fingers adapted to be moved toward or from each other, means for operating said fingers at definite times during the formative action upon the bag-tube, operating means for the forming-plate adapted to cause the said plate to oscillate about its rear edge upon the surface of the cylinder during the rotary movement of said cylinder, the whole operating for the purpose of opening and forming the bottom of the bag-tube, and means to move the bag-tube with the cylinder."

No machine was ever built for practical uses in accordance with the patent, but a model was constructed for this case. This is evidently a practical machine, and it is not maintained that it departs from the patent in any essential particular. Therefore we must find that the machine as described in the patent is practical. While, moreover, the complainant, previous to this litigation, had not practically demonstrated the utility of its machine, yet, if the complainant is correct in its propositions as to infringement, the respondent has shown it; so, that, therefore, as to the issues of practicability and utility there is no difficulty which presents itself to the court. We should also add that we understand the defence is limited as

hereinafter stated, so that, in fact, no question is made on the points either of utility or practicability.

The principal defences, as stated to us by the respondent, are two: first, that the respondent's machines do not infringe; and, second, that the patent in suit is void because the only distinctive part of the mechanism described and claimed therein was not invented by Liddell, but was contributed by one Hunter, and was inserted by him in the drawings and specification without the direction, procurement or knowledge of Liddell. The first principle ground of defence has a double aspect, as follows: first, the respondent's machines were constructed in accordance with a patent to Edward E. Claussen, No. 598,497, issued on February 8, 1898, on an application filed on July 29, 1896. The respondent claims that Claussen's invention was prior to Liddell's, so that, conceding Liddell any invention, it would necessarily follow that the respondent's machine could not infringe the patent in suit. Second, conceding Liddell's priority, it is claimed that the mechanism of the respondent's machines is substantially unlike the mechanism claimed in the complainant's patent.

2622 The bill asks for both an injunction and an account; and, though no issue has been made as to jurisdiction in equity for the account, it is maintained that, under the circumstances, equity will not take jurisdiction for an injunction. We have stated that no machine for practical manufacturing purposes was ever constructed under the Liddell patent. The record also shows that the complainant, so to speak, locked up its patent. It has never attempted to make any practical use of it, either itself or through licenses, and, apparently, its proposed policy has been to avoid this. In this respect it has not the common excuse of a lack of means, as it is unquestioned that the complainant is a powerful and wealthy corporation. We have no doubt that the complainant stands in the common class of manufacturers who accumulate patents merely for the purpose of protecting their general industries and shutting out competitors. According to the view of the court as now constituted there are, and can be, no peculiar rules applicable to bills in equity in causes touching alleged infringements of patents for invention; and such bills are governed by the general rules, except, of course, so far as the statute authorizes an award of damages as well as an account of profits. Applying those general rules, it seems to the court as now constituted that a case like this at bar exhibits no interest involved as to which a complainant can suffer legal detriment pending litigation in the courts of common law. Nevertheless, in some way the practice seems to have crystallized otherwise, and the court sees no relief for the respondent in this direction unless, in some way, obtained from the Supreme Court. The court is all the more indisposed to act on its own peculiar views because, in any event, if the complainant's case has merits it has not been claimed, as we have already said, that it is not entitled to maintain this bill for an accounting. An accounting would probably be quite as serious for the respondent as an injunction, which may be superseded during an appeal, while, also, an interlocutory order for an accounting and for nothing else

BLURRED COPY

would interpose long delays before reaching the appellate tribunals, which delays would not follow the ordinary decree for an injunction and a master.

This case presents mainly issues of fact, involving numerous details and considerations *pro* and *con*. They were argued with
2623 ability and thoroughness, covering the larger portion of a week. Many questions were thus sifted out, and results there reached by the court which it holds in mind satisfactorily to itself. It is not often of much value, under such circumstances, to develop such issues in judicial opinions, and, frequently, enlarging on details obscures the pith of the conclusions reached. For these reasons, the burden which the court must assume in undertaking to recall and state all the details of the various questions of fact which were digested by it as the case was argued would not be compensated for by the results of an attempt to do so universally, and, therefore, on at least some such questions, our conclusions will be stated very briefly.

The respondent insists that the Liddell patent was the twentieth in the line of patents in this special branch of the arts. This proposition, however, does not assist us, because, no matter how many may have preceded Liddell's, his is marked by a peculiar feature of novelty which clearly distinguishes it from all that went before it, all questions as to Claussen being for the present reserved. Unless anticipated by what is shown in Claussen's patent to which we have referred, the Liddell patent does disclose invention, and we think its nature is so clear, and, as we have said, so disconnected from what precedes it by such a hiatus, that, if the claims are as extensive as the invention, there is no difficulty so far as concerns the application to the case of the rules with reference to equivalents.

The respondent states that the claims in issue can all be made to conform to patents in the prior art by simply substituting a reciprocating carrier for a rotating cylinder. This proposition is frequently urged on the courts, yet they are frequently compelled to disregard it as has been heretofore often explained. On this record, we must find that, unless anticipated by the Claussen patent, the machine shown by the Liddell patent is the first in which, in lieu of a reciprocating carrier, a rotating cylinder could be used advantageously as the bed on which the following can be performed. It is, however, claimed by the respondent that the mere suggestion of a rotating cylinder in lieu of a reciprocating carrier was not new with Liddell, and that, even if it has been, rotating cylinders and reciprocating carriers are such well-known equivalents that the substitution of one for the other cannot be regarded as involving invention.
2624 That this is not necessarily true under all circumstances was shown by the Circuit Court of Appeals for this Circuit in Watson *v.* Stevens, 51 Fed. Rep. 757.

As we have said, we are compelled to find on this record that the problem of combining a rotating cylinder with the mechanism which folds the peculiar paper bag here in question was not satisfactorily solved before it was disclosed by Liddell or by Claussen. In Liddell, this novel feature is shown by that portion of Claim 1 which is

contained within the following words: "Operating means for the forming-plate, adapted to cause the said plate to oscillate about its rear edge upon the surface of the cylinder during the rotary movement of said cylinder." It cannot fairly be questioned that the solution of the problem of substituting a rotary movement for a reciprocation in a paper-bag machine intended for this peculiar bag, whoever made the substitution, be it Lorenz, Liddell, Hunter or Claussen, involved invention; and this covers the fact that this invention did not constitute an advance in the state of the art in such a sense that the complainant deemed it advisable to discard its old machinery and use Liddell's. Invention may clearly exist, notwithstanding it does not accomplish so fundamental a result. It is enough that it addresses itself to any considerable portion of the community, as it did to the respondent, and creates an opportunity for electing for a choice between different methods, each having its own advantages. Numerous examples supporting this proposition might be cited if it were necessary to do so.

Therefore, what we have to deal with as the pith of Liddell's alleged invention is the combination of a rotating cylinder with means for operating the forming-plate in connection therewith, limited, however, to means which cause the plate to oscillate about its rear edge on the surface thereof. The complainant maintains that Liddell's invention extended to the full breadth of this combination whatever might be the method adopted to cause the forming-plate to oscillate about its rear edge. On the other hand, the respondent maintains that the invention was no broader than the details described in the specification. It is difficult to see on what the respondent can base this proposition. It refers to nineteen preceding patents aside from Claussen, as though they had some relation
2625 thereto. As we have said, there is such a hiatus between them and what appears on the face of the Liddell patent, that they have no effect, either in narrowing or broadening the alleged Liddell invention. If any of them pointed out any form of combining the forming-plate with a rotating cylinder, they would, of course, narrow what Liddell could claim; but they have nothing of that kind. In order, however, to make it clear that Liddell had accomplished a practical invention and to conform with section 4888 of the Revised Statutes, it was prudent, if not necessary, for him to point out some practical method in which the forming-plate be made to oscillate about its rear edge; but in the absence of any expressions in his claim making the details thus pointed out an element therein, they would not, under the ordinary rules, be limited thereby. These details might be of such a character as to involve invention in themselves, and be the subject of separate claims or patents. They were not, however, separately claimed, and nothing in the record contradicts the presumption arising from the issuing of the patent that each of the several claims in suit could stand alone as representing in and of itself a patentable invention. Nothing in the manner in which the claims are expressed adopts as an element the detailed description contained in the specification. So far as the details of that description are concerned, they come within the

ordinary rule of the preferable method. We have nothing in the prior art which narrows Liddell's invention as maintained by the complainant, and nothing to show that the details contained in the specification are in any way necessary parts of the claims in suit or that those claims are more narrow than the invention. Therefore, we start with the proposition that Liddell's alleged invention covered every method of combining the rotating cylinder with the forming-plate by causing the plate to oscillate about its rear edge on the surface of the cylinder, and that the claims are as broad as the invention.

These general propositions, as to only one of which our conclusions are in substantial dispute, namely, that Liddell's means of causing the forming-plate to oscillate about its rear edge are not limited to the details pointed out in his specification, we will now follow out, taking up the specific defences which seem to be particularly relied on by the respondent. In the order of the defences we
2626 put the question of infringement first. This is the order adopted by the respondent; and though theoretically, in disposing of infringement suits, it should be the last, there are special reasons why, in this respect, we should follow it. The respondent claims that Claussen in fact was prior to Liddell. It avoids the word anticipated, because it does not wish to sink the question of infringement into that of anticipation. In its explanation of Claussen's priority it does not maintain that Claussen constructed a practical machine prior to the admitted date of Liddell's conception, but it puts the case as follows: The intellectual origin of the respondent's machine occurred in the mind of Claussen on November 6, 1895, and was recorded by him on that day in a pencilled sketch, the original of which is in evidence; and what was shown by this pencilled sketch was afterwards carried forward by Claussen, through his further developments, into the Claussen patent No. 598,497, already referred to, and into the respondent's machines, with a certain exception which the respondent maintains is not essential in this suit. These propositions and the effect of them can be more easily explained after a critical comparison of the Liddell and Claussen machines which must be made on the direct issue of infringement. Claussen's patent was not applied for until several months after Liddell's issued. Therefore, if the question of identity is first settled, the decisions must have clearly established certain propositions as to the burden and weight of proof necessary to establish priority on the part of Claussen which must have due effect in determining the case before us. The respondent, however, undertakes to go on concurrently with both issues, namely, that of infringement and that of anticipation, putting these propositions as we have already generally stated, and putting them again more in detail, as follows:—

"The defendant's machines are entitled to occupy a position in the art at least two months earlier than the position which the Liddell patent is entitled to occupy. That being the relative position of the defendant's machines and of the Liddell patent in the chronological history of the art of paper-bag machines, it must follow that the Liddell patent is void for want of novelty, on account of the

prior Claussen invention; or it must follow that the defendant's machines do not constitute an infringement of the Liddell patent, for it is certain that a patent upon a later invention cannot be invoked to suppress an earlier invention."

2627 We prefer, however, not to embarrass the case by examining these two questions in connection with each other, because to do so confuses the line of thought and leads to the danger of losing sight of the rules of evidence to which we have referred. It is clear that, if there is no similitude of the essence of the machines, there can be no infringement, and no question of anticipation will arise; and that will be the end of the case. It is also clear that, if similitude is found to exist, the question then becomes one of technical anticipation, and not of mere priority, to be determined according to settled rules of the patent law and the rules of evidence applicable thereto to which we have referred. The path of safety is in taking up the question of similitude first, and then, if found necessary, the question of anticipation.

On the question of similitude, the respondent on the one hand starts with a fundamental error as follows: It says in substance: Neither claim designates the operating means adapted to cause the forming-plate to oscillate about its rear edge either by names, or by reference letters or numerals; and recourse must, therefore, be had to the descriptive part of the specification to ascertain what "operating means" are meant by that language in each of the claims. It may turn out that, on a careful examination, the correction of the erroneous departure which the respondent makes at this particular point will solve all it has to say on the question of similitude.

On the other hand, no interference was declared by the Patent Office as between Claussen and Liddell. Moreover, there is nothing expressed specifically on the face of the Claussen patent to indicate that it was issued by the Patent Office as merely for an improvement on Liddell. Nor is there anything in the Patent Office file to indicate that the examiners cited Liddell as anticipating Claussen's application. Therefore, the respondent is entitled to the presumption against infringement which, under the general rules of law and the authorities, arise from these facts. While we have already expressed in a general way our conclusion against the proposition of the respondent, that recourse must be had to the descriptive part of the specification to ascertain what means are required by the language of each of the claims in suit, it may be well for us at this point to state more fully the reasons of that conclusion, and

2628 also to examine as to the *prima facie* effect of the granting of the patent to Claussen.

At this point it becomes necessary to explain more positively the pith of Liddell's invention. The complainant states that it relates to what is known in the arts as Self-Opening-Square bags, or, in an abbreviated form, "S. O. S." bags, or "Deering" bags. We understand that these several designations, wherever they appear in the record, mean the same. On this particular proposition, the respondent makes no statement except in the language of the patent, which is that it "has for its object the production of a perfectly-formed

satchel-bottom bag in a speedy and accurate manner." This difference does not seem to require further attention. The claims in issue deal only with making the "diamond" fold. Aside from the cylinder and the forming-plate oscillating about its rear edge, everything in these claims is necessarily old in the arts. The cylinder, also, is found in patent No. 333,647, issued on January 5, 1886, to Lorenz and Honiss, the central feature of which was said to be the continuously-rotating cylinder; but, in lieu of a forming-plate oscillating on its rear edge, the means used for making the "diamond" fold were the blades of "one or more pairs of box-folding mechanisms." Whatever these were, there is no evidence that they were the equivalent of Liddell's forming-plate oscillating about its rear edge, or that the combination of the cylinder with either the box-folding mechanism or the forming-plate oscillating on its rear edge would be the equivalent of each other in the arts. The only witness on this topic is Claussen, admitted by both sides to be a sufficient expert. He confirms our proposition. All said to us in argument was that Lorenz and Honiss provided a cylindrical bed in their patent, but there was no claim that they anticipated Liddell in the particular which we are discussing. There is only the general proposition, that, taking the claims in suit literally, they could all be made to conform to some particular patent in the prior art by merely substituting a reciprocating carrier for the rotating cylinder. The respondent maintains that its bed is neither the Lorenz and Honiss bed nor the Liddell bed; but, if it intended to maintain that the combination of the cylindrical bed with one or more box-folding mechanisms was the same as a combination of the cylindrical
2629 bed with Liddell's forming-plate oscillating about its rear edge, it has failed to positively so state, or to call our attention to any proofs in the record to that effect. It has also failed to show us that the Lorenz and Honiss machine proved to be a practical one, or why, if it was practical, it did not make use of it as it might have done, the patent having expired, in lieu of machines involving, as we are asked to find, the precise principle of Liddell's invention.

Liddell describes his invention as follows:—

"This application comprehends certain mechanism for forming a satchel bottom upon the tube in the manufacture of paper bags, and has for its object the production of a perfectly-formed satchel-bottom bag in a speedy and accurate manner. My improvements, briefly stated, may be described as follows: The tube is received upon a revolving cylinder and carried forward by a nipper, which clamps the lower sheet of the tube, or by other means hereinafter described. The upper sheet of the tube passes above a finger upon a movable forming-plate, securely held at a short distance from the revolving cylinder, and between which and the cylinder the tube is guided. The forming-plate is then caused to rotate about its rear edge simultaneously with its movement or travel with the revolving cylinder, thereby opening the end of the tube, spreading the side folds, and marking a creased line transversely. Simultaneously with this, forming fingers are projected into the side folds, one pair being adapted to the cylinder and the other pair to the forming plate. A

continued movement of the parts causes the upper layer or sheet of the tube to be completely turned backward upon itself, and at the same time the forming-fingers together with the other parts insure the proper formation of the diamond fold. The tube in this shape leaves the revolving cylinder, passes to the pasting devices, and thence to the folder."

The complainant's counsel explained the duty performed by the forming-plate as follows: It has through its engaging fingers the function and duty of carrying the upper plies of the blank for the bag upward and backward with reference to the lower plies held on the folding-bed, so as to distend the mouth of the blank; and thus the forming-plate is first brought to a position of practically parallel registration with the folding-bed at the time the blank is fed to the bed; and then as the bed moves backward in its rotating path, the plate also rotates until the diamond is practically spread out and formed.

In further explanation of the pith of the invention, the
2630 complainant invites us to read the testimony of Dayton, twelve printed pages, and to analyze it for ourselves. On turning to it we find his testimony too much of the class to which experts often devote themselves. Such testimony should ordinarily be limited to pointing out the mechanical principles involved, and the state of the whole art, and showing us the pith of the specification from a mechanical standpoint. We find in his testimony, however, the following pithy expressions, which it seems to us to represent the true nature and breadth of Liddell's invention. Dayton says that, in order to form the "diamond," while the rotary bed of the cylinder is advancing, the upper fold of the tubular blank must be elevated and turned back towards and over the body of the blank.

Of course, mechanism which can be kept travelling in one direction, as Liddell's can, may run with greater speed than mechanism which reciprocates, and would ordinarily produce more uniform results. It is hardly necessary for us to refer to proofs on that point, but Stone, the respondent's expert, testifies directly to that effect. Also, like almost every other step in the art of making paper bags automatically, it is apparent that the conception by means of which the folding mechanism could be successfully combined with a rotating movement in lieu of a reciprocating one presented a problem which would be solved only by accident or by ingenuity. It is also apparent to the common mind, when once brought to its attention, that the principle involved in the operation of a forming-plate oscillating on its rear edge, and thus easily opening up and turning back the folds as the revolution of the cylinder proceeds, would afford a solution. Admitting, as said by the respondent, that the suggestion of making use of cylindrical motion in the art was not new with Liddell, and although, clearly, it had been previously used by Lorenz and Honiss, and although it may also be supposed to have been in the minds of many others, and admitting that the complicated mechanism of Lorenz and Honiss in their patent already referred to was capable of producing a result, yet, after they were disclosed, it was easily apparent that the means

adapted by Liddell were the natural method of reaching success. Such is the view of the invention in issue which impresses itself on the mind of the court.

2631 From what appears as to the state of the art, it must be held that the invention in issue lies in the peculiar suggestion of oscillating the forming-plate on its rear edge, and that, subject to what is claimed by the respondent as to Claussen, Liddell having pointed out how that suggestion could be practically worked out, his invention, his patent and his claims, and his rights against infringers, are as broad as that suggestion. This is a broad application of the laws of mechanical forces and all the rest is detail, which detail can be worked out in the manner pointed out by the specification, or in any other method. Whether the method thus worked out is of such a character that it might be accomplished by anyone skilled in the art, or whether it, in and of itself, might involve a separate and distinct invention, and be capable of a separate and distinct claim, or of forming the basis of a separate patent, is of no consequence to this case. Section 4888 of the Revised Statutes makes it a condition that the principle of the patented machine shall be explained, and, also, the mode in which the patentee contemplates applying that principle; but this is only a condition on which a patent issues, so that, when this condition is once met, this no longer limits the rights of the patentee. Even in the case of a newly-discovered art, using the words of the statute so often replaced to a certain extent in the text-books and decisions of the courts by the word process, it is settled that this rule applies. *Tilghman v. Proctor,* 102 U. S. 707, 728; *The Telephone Cases,* 126 U. S. 536; Walker on Patents, 4th ed. (1904) 160. In the case of that sub-division of the word art ordinarily spoken of as process, it seems to be rare that this rule is applied, as the claim must ordinarily point out all the essential steps of the process. It is, however, easily and frequently applied to a machine where it is a very common fact that the patentees are protected, although the infringer may make use of other means than those employed by them. *Deering v. Winona Harvester Works,* 155 U. S. 286, 302. Indeed, though not said from the precise point of view from which we are speaking, the observation of Chief Justice Fuller in *Howe Machine Company v. National Needle Company,* 134 U. S. 388, 394, is very pat: "The specification and drawings are usually looked at only for the purpose of better

2632 understanding the meaning of the claim, and certainly not for the purpose of changing it and making it different from what it is."

The respondent states that "the functions of the defendant's machine and the mechanism of the Liddell patent are identically the same"; although it adds the further proposition that "the mode of operation of these two mechanisms are both theoretically and practically different." This further proposition is evidently based on the error to which we have referred, namely, that the various details of the mechanism pointed out in the specification are essential parts of the invention and the claims. The truth is, as we have shown, that the identity of the functions of the two mechanism is the entire substance on this question of infringement, because Liddell's inven-

tion is only the application of certain laws of mechanical forces, as explained by what we have cited, to the effect that, while the tubular blank is advancing, its upper fold must be elevated and turned back on the body of the blank; and no mere mode of operation is involved in Liddell's invention beyond the single matter of oscillating the forming-plate about its rear edge.

Before coming to the details of the difference in structure relied on by the respondent, we must dispose of the presumption in its favor arising from the issuing of the patent to Claussen, so far as there is any such presumption. We did not understand at the hearing that this point was urged on us, or even brought to our attention. Nevertheless, it is one which the court ought fairly not to overlook. Of course, if this were a case of double patenting, that is, if the patent issued to Claussen was exactly what was patented by Liddell, no more and no less, a presumption would arise therefrom in favor of the respondent, but, even in that event, the presumption would not be strong enough to overcome the facts as we find them, and as applied to this particular case, in the way in which we have developed it. But, on the face of the papers, there is no double patenting. Walker on Patents, 4th ed. (1904) touches on this question at two points at least. At page 167 the learned author treats of this topic where both patents issued to the same patentee. At page 278 he refers to interfering patents. Of course, we need not point out that no presumption will arise unless the patents to Liddell
2633 and Claussen were interfering patents. The learned author, at the page last cited, says: "But a generic claim and a specific claim, the first of which secures a particular process or mechanism with its indispensable characteristics, with or without its minor features, and the last of which secures the same process or mechanism, with, but not without, its minor features, are not coextensive claims, and, therefore, do not interfere with each other." On the face of the patents, that is precisely the case here. The first twelve claims of the Claussen patent specify as an element an oscillating carrier. Some of the remaining claims specify the same oscillating character, but those which do not relate purely to matters of details in no way assume to claim the pith of the controverted invention. In addition to that, the specification of the Claussen patent contains nine columns of description of details. Therefore, while the Patent Office might well have regarded that patent as doubtful in its nature, there is nothing on its face to show that it related to anything more than improvements in matters of detail, including with the rest a peculiar species of carrier, none of them referred to in the Liddell patent. So far as we are advised, there is nothing in the record to show that the two were regarded by the Patent Office as interfering patents, so that we may dismiss from the case any such presumption as we are now considering.

Coming now directly to the detailed propositions which the respondent relies on with regard to the question of infringement, they are as we have seen, that, while the respondent admits that the functions of the defendant's machine and the mechanism of the Liddell patent are identically the same, the modes of operation are

theoretically and practically different. In this connection, we return again to the following language of the respondent which we have already referred to:—

"Neither of those claims," meaning the claims in suit, "designate those operating means," intending the means for operating the forming-plate, "either by names, or by reference letters or numerals. Recourse must, therefore, be had to the descriptive part of the specifications to ascertain what operating means are meant by that language in each of the claims."

We have shown that this is fundamental error on the part of the respondent, and need not return to it; although, perhaps, the leading proposition of the respondent on this topic, that is, its proposi-
2634 tion that it does not use the cylinder of the Liddell patent, cannot thus be disposed of.

The respondent sums up what it says on the question of infringement in five propositions. The first and second represent the respondent's view of the relation of the Liddell patent to the art, in view of the preceding nineteen patents, a topic which we have already disposed of. The third maintains that the "particular mechanism" claimed to infringe the patent in suit is both analytically and synthetically so different from the mechanism of the Liddell patent that it cannot be held to infringe any claim of that patent. We have already shown that, so far as the real novelty of the claims in suit is concerned, we have nothing to do with the particular mechanism, so that this third proposition will be found not to apply. The fourth and fifth are only minor propositions which we do not find it necessary to consider. In opening up the topic of infringement, the respondent divides the claims in suit into the first, second and third divisions. Subsequently, it refers to four divisions of the respondent in this relation. The rotating cylinder, provided with the side-forming fingers and the lower forward fingers, constitutes the first division. The respondent also states that two of the Liddell claims specify "means to move the bag-tube with the cylinder." It, however, properly lays this aside upon the ground that it would be implied whether it is specifically stated or not. According to the respondent, the "forming-plate provided with side-forming fingers," constitutes the second division. It also adds that Claims 1 and 7 fail to expressly call for the upper forward fingers, although Claim — does so; but that finger is called for by implication. Then it proceeds as follows:—

"The third division of the claimed mechanism is specified in each of the last three claims," meaning Claims 1, 2 and 7, "as means for operating the side-folding fingers and the side-forming fingers at definite times; and the specification and drawings indicate that those means consist in certain cams, arms, springs and rods, which are shown in Fig. 2 of the drawings of the patent."

We may as well dispose at this point of what the respondent says as to the matters to which this third division relates. It will be found, as we proceed, that this division, with the amendment to the answer, which we must then fully consider, and which was
2635 allowed on March 2, 1903, shows that at that time the respondent, if not the complainant, considered that at least

seven of the claims of the patent in suit, being those from one to seven each inclusive, were in issue. We have not specially examined the claims aside from Claims 1, 2 and 7; but we infer, from what examination we have given, and some matters that appeared at the hearing, that they relate largely, if not entirely, to details of the mechanism shown in Liddell's specification and drawings.

As we have said, only Claims 1, 2 and 7 are now in issue. At what stage of the case, either with reference to the taking of proofs or the preparation of the briefs, this change became apparent we are not advised; but presumably a large portion of the testimony and many expressions of witnesses, including those concerning the extent and nature of Liddell's alleged invention, or inventions, had relation to some other seven claims than those we are now considering. Therefore, presumably for that reason, even witnesses for the complainant have described the Liddell invention, or inventions, as covering details, while we have described it, or them, as relating only to fundamental combinations in the way in which we have done. Thus, presumably in this way, many expressions on the part of the complainant's witnesses, including the experts, would seem to justify the propositions of the respondent that the invention, or inventions, in suit cover mechanical details. However this may be, the court which, in patent suits, stands not only for the parties, but, in a certain sense, for the public, must accept the condition as it clearly finds it, regardless of propositions by the litigants *pro* and *con*. This applies with particular force to patent suits, as to which the court must have in view not only the interests of the public, but the desirability of reaching uniform results in various suits relating to the same patent. However all this may be, it is plain, in the light of the views we have already emphatically expressed, that we need not concern ourselves further about the third division, which clearly on its face relates to mere mechanical details, no way involved in the inventions covered by Claims 1, 2 and 7.

Then comes what may be called the fourth division. Here the respondent says that what we have already considered as enumerated in the first, second and third divisions of the respondent's
2636 analysis of the claims in suit does not extend to mechanism for causing the forming-plate to oscillate with the rotation of the cylinder. The respondent then particularly cites the words, "operating means for the forming-plate, adapted to cause the said plate to oscillate about its rear edge," etc.

As to the first division, the respondent says that its machine does not include any cylinder, although it does include one or more pairs of side-folding fingers and a forward finger or clip. This, therefore, relates only to the cylinder which we will hereafter consider. As to the second division, it says . at the forming-plate of the Liddell patent is provided with a pivot at the right-hand edge thereof, has an upper forward finger fastened thereto at the right-hand edge, and one of its forming-fingers in its place under the forming-plate. The respondent proceeds that the difference in construction and mode of operation between its fingers and Liddell's are considerable, but that the respondent passes over that subject to explain what it alleges to

be a far more important difference between its plate and the Liddell plate, growing out of the fact that the respondent's plate oscillates on a pivot midway between its two edges, instead of on a pivot at its forward edge, as in the Liddell patent. If there are any such differences whatever with reference to the forming-plate and its method of operation they are obviously of the same mechanical character which we have already described, of no importance in this case, because the claims in issue require only that the forming-plate shall oscillate about its rear edge on the surface of the cylinder. As we have said, the application of the mechanical laws by virtue of which a forming-plate, oscillating about its rear edge, so that necessarily, as the cylinder advances, the plate turns the ends of the paper-bag blank back upon its body, form the essence of this element in the claims; and neither the invention nor the claims involve any particular method or mechanism by which the oscillating about the rear edge is acomplished. The method in which the respondent closes this part of its case establishes in a general way what we have said. It observes, in substance, that it had also analyzed the mechanism of the respondent's machine; it had compared the first, second, third and fourth divisions of its mechanisms with the first, second, third and fourth divisions of the Liddell patent; and
2637 that it has thus shown that the mechanism claimed under the Liddell patent is very different "in all its details" from those of the respondent's machine. The words, "in all its details," we quote from this portion of the respondent's concluding proposition on this point, where, also, it makes no claim of differences except in details.

The respondent then turns to what it styles its synthetical comparison of the mechanism in question; and it thereupon maintains that the two mechanisms in question, as a whole, are so unlike each other that it is impossible to conceive how the complainant could maintain that the respondent had infringed. This, however, seems to us nothing more than to maintain that the various differences to which we have referred create a total lack of similarity. Therefore, it can have no relation except to differences, none of which are essential; yet, what is negative cannot be made to count by any process of addition or grouping.

We now have remaining on this part of the case only the matter of the cylinder. The proposition is that the Claussen patent shows only a "rotating conveyor" with two oscillating carriers pivoted thereon. There is no question that the complainant does not have the oscillating carriers, and it may be that in this respect the respondent's machine is an improvement on the complainant's; but the oscillating carriers only supplement the oscillating forming-plate, without removing from the plate the peculiarity of oscillating on its rear edge, claimed by Liddell. The respondent relies on the distinction, over and over again referred to by it, that instead of the cylinder it has a rotating conveyer; or, to put it otherwise, instead of having the cylinder of the Liddell patent, the respondent's machine has an irregular and peculiarly shaped conveying frame. This irregularity, we may say in a general way, consists in depressions made for the

reception and locating of the oscillating carriers. The respondent maintains that the conveyer and the carrier do not constitute a cylinder, because it says that a cylinder is defined as a solid whose curved bounding surface is generated by the motion of a straight line, etc., citing what is the usual definition. This appears to be an extraordinary refinement of language; and, in view of the fact that the claims of the Claussen patent over and over again describe the conveyer, not as a rotating conveyer, but as "a cylinder provided
2638 with a mutilation," and over and over again speak of the carrier as "pivotedly mounted on the cylinder," how can the respondent claim that the word cylinder in the complainant's patent is to be construed more rigidly than the same word in the respondent's patent? It does not escape from the complainant by merely using the expression "rotating conveyer," because clearly an ellipse, rotated for the purpose and in the manner pointed out in the patent in suit with reference to the cylinder would be a rotating conveyer; and common sense would reject the proposition that an ellipse arranged to rotate as the complainant's cylinder rotates, and as undoubtedly could be arranged, would not be a clear imitation and infringement under color of the complainant's invention.

The definition which the respondent cites is that of a "right cylinder" as mathematically known. This is mathematically exact, and, moreover, is a solid, as is expressed by the respondent itself. Yet, of course, the word cylinder is often used as meaning a cylindrical body which is hollow. It would be absurd to maintain that the glass body which is so often spoken of in connection with electrical machines as a "glass cylinder" need either be a solid or a "right cylinder," or anything more than an approximate cylinder. Anything which approximates a right cylinder and which permits the friction necessary in generating electricity would be called in the science of electricity a cylinder. Indeed, in mathematics the word cylinder is often used so loosely that in order to point out a "right cylinder," such as is described by the respondent, it is sometimes advisable to connect with it the word "circular," styling it a circular cylinder. Chauvenet's Elementary Geometry, 239. This is true to such an extent that the Standard Dictionary correctly defines one use of the word cylinder as follows: "Any cylindrical portion of a machine, especially if hollow, proportioned so as that the length of it exceeds the diameter." Then it follows with illustrations giving some examples in which very little of the true circular form is left. Looking at the respondent's proposition in this particular, either from the point of similitude in connection with any use of the word cylinder except the strict mathematical sense which the respondent relies on, or from the point of equivalency in view of the fact that the essence of the complainant's invention and
2639 claims is the useful combination with a surface which is endless through revolution, it is impossible to maintain the respondent's position without flying directly into the face of *Winans v. Denmead*, 15 How. 530, shown by the Circuit Court of Appeals for this circuit, in *Reece Company v. Globe Company*, 61 Fed. Rep. 958, 964, to have always been recognized as law. Therefore, as to

every essential portion of the defence of infringement, we must hold that the case is with the complainant.

We now come to what apparently should be spoken of in the plural; that is to say, the defences set up by the amendment to the answer already spoken of, allowed on March 3, 1903, which, in justice to all concerned, we must quote at length:—

"The defendant says, on information and belief, that said Liddell Letters Patent No. 558,969 are void, because William Liddell was not the original, first and sole inventor of the combination claimed in any claim of said Letters Patent; and because that such sub-combination of each of those combinations which is designated in Claims 1, 2, 3, 4 and 7 of said patent as 'operating means for the forming-plate adapted to cause the plate to oscillate about its rear edge upon the surface of the cylinder during the rotary movement of said cylinder,' and which is designated in Claims 5 and 6 of said Letters Patent as 'power devices for oscillating the said forming-plate upon the movable frame, so that its rear edge travels in conjunction with, and at the same rate of speed as, the cylinder,' and which sub-combination is shown in the drawings of said patent to consist of the cam K^1, the came K, the arm F^1, the arm F, the rod K, the link k^2, the arm connecting that link to the gear M^1, and also that gear M^1, the upper gear M, the lower gear M, and the gear N, was never invented or planned by William Liddell, but was contrived by some other person without his knowledge, and was inserted in the combination of each of the claims in the Letters Patent, and in the description and drawings of that patent, without his direction or procurement; and because the said sub-combination thus contrived, and introduced into the Liddell Patent, by some person other than William Liddell, is the most essential and only distinctive part of the mechanism described in that patent and delineated in the drawings thereof. The defendant says, on information and belief, that said Liddell Patent No. 558,969 is void, because Rudolph M. Hunter, or some other person, other than William Liddell, participated in inventing the combination which is claimed in Claim 1, and the combination which is claimed in Claim 2, and the combination which is claimed in Claim 3, and the combination which is claimed in Claim 4, and the combination which is claimed in Claim 5, and the
2640 combination which is claimed in Claim 6, and the combination which is claimed in Claim 7 of said Letters Patent."

This amendment to the answer raises two defences, which, from one standpoint, are not only separate, but of a distinct character, while, from another standpoint, they may be treated together, because they constitute one transaction, and depend, on one side and the other, on the contradictory testimony of the same witnesses as to the same proceedings. We will look first at the second aspect. This comes within the rule applied in so many different directions, that, as such defences impugn a patent for an invention, issued with apparent regularity, they cannot be successfully supported, as are ordinary issues in civil suits, by a mere preponderance of proofs, but they require to be supported, to put it in the mildest way, by proofs which are satisfactory to the court. This is especially

emphasized in this case because, while, as appears from the patent in suit, the application therefor was filed in February, 1896, this bill was filed on October 11, 1901, the amendment bringing in these defences was not allowed until March, 1903, and the proofs in reference thereto were taken in the years 1903 and 1904, from seven to eight years after the date of the application; and this is the first time that an attack of this character has been made on the Liddell patent. For this and other reasons it happens that none of the witnesses have had occasion to recall any of the facts touching the pith of the matters put in controversy by this amendment. It also happens that there is no existing document, or record, or other contemporaneous thing, which directly supports the testimony of either as to the fundamental facts as to which they differ, except to some extent with reference to the complainant's use. Reflections on all those witnesses who contradicted each other have been suggested by the parties *pro* and *con*, none of which have impressed the court. A portion of this evidence is clearly based on inferences and not on recollection, either clear or hazy. For these reasons, and, also, because there has never been any occasion to recall them, or to fix them in the memory of the witnesses, the testimony as a whole is not of the character which is required on issues of this class; although, aside from certain peculiarities which, according to the rules of evidence, can be developed only on cross examination,
2641 and, therefore, cannot be gainsaid by the parties developing them, peculiarities allowable only for the purpose of making the court or jury acquainted with the witness, and peculiarities which, in this case do not particularly affect the integrity of anyone, and which in this case have not aided the court in any respect, the witnesses, as we have said stand unimpeached.

As the defences brought in by the amendment necessarily stand on the same testimony, each, therefore, involves not merely the charge of fraud, but a criminal offence of a very high and serious character, if not under section 5418 of the Revised Statutes, at least under the common law or statutes of the State. Therefore, the rule to which we refer has particular application. It may well be said that it goes to the extent of requiring, as held by the Circuit Court of Appeals for this circuit in *American Bell Telephone Company v. United States*, 68 Fed. Rep. 542, and as expressly affirmed by the Supreme Court in the same case on appeal, 167 U. S. 224, 251, that, under the circumstances, the proofs must be "clear, unequivocal and convincing." For a broader application of the same rule, we may refer to *Lalone v. United States*, 164 U. S. 255, 257.

As what we have to observe on this rule of evidence concerns not only the particular defences which we are considering, but also the defence of alleged priority of invention on the part of Claussen, we deem it advisable to refer to two cases decided by the Circuit Court of Appeals for this circuit: *Brooks v. Sacks*, 81 Fed. Rep. 403, 405, 406, 407, and *Westinghouse Company v. Stanley Company*, 133 Fed. Rep. 167, 177, 178, 179. These cases related especially to questions of priority. In *Brooks v. Sacks* we showed that, on the authority of the Supreme Court, the rule applies, not only as

between an inventor and one who claims priority, but as between one who establishes an apparent priority and the inventor, when the latter undertakes to rebut that established priority by showing a still earlier priority than that disclosed on the face of his patent. That case was between an alleged inventor and an alleged infringer. The events covered a period of fully six years prior to the witnesses giving their testimony; and, although all the witnesses stood unimpeached so far as their integrity was concerned, the evidence offered in behalf of the inventor who undertook to establish the pri-
2642 ority in rebuttal was not accepted by the court because it was not authenticated by any supporting facts of a concrete or visible character. On the other hand, in *Westinghouse Company v. Stanley Company*, the court accepted the evidence of priority offered in behalf of the inventor on the ground that the application for a certain other patent established a certain date earlier than that of the application for the patent in suit, and created in behalf of the patentee an inference of a sufficiently earlier rebuttal date, which inference thus established was so pursuasive that the court was compelled to yield to it. In that case also the principal witness in behalf of the inventor had previously testified on several occasions, all to the same effect, the earliest of which occasions was in connection with an interference declared against the patentee before the patent issued. As also said, there was in behalf of the patentee a certain atmosphere of probability, and, on the part of the principal witness, an interest continuous from the time he was first informed of the invented conception in question. Thus the inventor's claim to priority was supported in the various ways we have pointed out. In the case at bar, however, the proofs offered by the respondent is regard to the defences brought in by the amendment are not supported by a scrap of anything relating to the substance of the events contemporaneous with them. None of the witnesses had had occasion to consider the occurrences during a period of more than seven years, and the witnesses *pro* and *con* are subject to the observations affecting the value of their testimony which we will make from time to time as we proceed. None of them had any special interest in maintaining a continuous recollection of what occurred; and, in view especially of the fact that the solicitor for the complainant, or rather for its predecessor in title, which solicitor we will refer to again, stands charged on the respondent's case, as we have shown, not only with fraud, but with a serious criminal offence, although in all other respects his integrity is not questioned, the balance of the probabilities will be found to lie with the complainant, and not with the respondent. Considering the rule of evidence to which we have referred, the case is too clear for the complainant on these issues to require us to go at great length into the disputed facts, although we necessarily must touch on them, and explain the nature of the proofs, as we develop the defences which we have now reached.
2643 Another reason for not weighing all the proofs is the fact that we need go only far enough to point out that the respondent cannot maintain the burden which we have shown is required as to all the defences which remain to be considered.

As we have said, the defences raised by the respondent's amend-

ment to its answer are two: first, in substance, that Liddell was not the sole inventor of the combination covered by the claims in issue, and that Rudolph M. Hunter was either the sole or joint inventor thereof. It will appear that it cannot be questioned that Hunter contributed to the specification at least certain details of a mechanical character, while it is claimed by the respondent that he contributed to Claims 1, 2 and 7 an essential element thereof to such an extent that Liddell could not take out a patent for the combination covered by them as sole inventor.

The other defence is in substance that Liddell, on the 7th of January, 1896, in Hunter's office, made oath to an application for this patent in accordance with section 4892 of the Revised Statutes, and that subsequently, a few days after Liddell left Hunter's office, and without Liddell's previous consent or subsequent approval, Hunter amended the specification, claims and drawings, rewrote the whole, withdrew the whole of what Liddell had made oath to, except the formal introductory and closing pages, and substituted an entire new draft, and thereafterwards filed in the Patent Office an application with the new matter thus substituted. Although Hunter, as Liddell's solicitor, held Liddell's power of attorney in the usual manner authorizing amendments, yet as such power of attorney would not, either by its purpose or under the law, authorize making amendments after the oath was taken by Liddell and before the application was filed in the Patent Office, or, even after the application was filed in the Patent Office, any amendments except of an incidental character, and with the knowledge and consent of the Patent Office, the acts alleged by the respondent to have been done by Hunter were, as is well known to every Patent Office solicitor, illegal, and of such a character that at least the United States, if not individuals acting as such, could by proper proceedings avoid the patent. The respondent also claims that, on account of
2644 its interest as an alleged infringer, it can set up the alleged acts of Hunter as a defence in this proceeding.

As we have already said, these two defences rest on the testimony of the same witnesses, relate to the same transactions, and are to a very large extent so interwoven that it would be a waste of time to undertake to analyze separately the entire record with reference to each, although the manner in which we will to some extent discuss them must necessarily create some confusion, and is not strictly the most logical method. The essential witness on behalf of the complainant on these issues is Rudolph M. Hunter, and those on behalf of the respondent are Liddell, the patentee, and one Drury, who was an independent draughtsman, but frequently employed by Hunter. As already said, it must be admitted that Hunter contributed to the application certain mechanical details which, either through haste or through inability, Liddell had failed to supply. Beyond that, the respondent insists that all that Liddell invented was a forming-plate which rotated through the entire arc of the circle, and that the substitution in lieu therefor of an oscillating forming-plate which revolved in performing its duty only through that portion of the circle where its duty was performed, after which

it oscillated back to the point where its duty commenced, was contributed by Hunter. In view of what must be thus admitted, and what is thus claimed, it is necessary for us to return to the law on this topic, which we have already spoken of to some extent, and to state it more forcibly than we have heretofore done.

We have, in a general way, observed that the fact that a stranger contributes to the mechanism necessary to make an invention operative, whether that contribution is such that a mechanic of ordinary skill in the art might be supposed to supply it, or whether this involves invention, would not affect any claims in the patent which do not cover the mechanism thus supplied, either as a whole or in combination. Our views on this point will be better understood by calling attention to certain underlying principles, and, also, to several authorities. These develop in two different directions. As the Circuit Court of Appeals for this circuit said in *Packard v. Lacing Stud Company*, 70 Fed. Rep. 66, 67, the law does not require
that an inventor shall himself overcome the minor details
2645 necessary to perfecting his invention; and "persons possessed
of most brilliant conceptions are sometimes the poorest mechanics." These propositions have been developed over and over again, and in every possible manner, in *The Telephone Cases*, first and last. The application of this rule in *Agawam Company v. Jordan*, 7 Wall. 583, shows its sweep and the almost unlimited extent to which it may be applied. There it appears at page 587 that the inventor was absolutely unable to practically work out his invention, and submitted his conceptions to a blacksmith who had been taken into the employment of the inventor. Upon the inventor explaining to his employé his conceptions and his attempted method of putting them into practice, the employé observed that the agencies which he thought to employ were bad, and suggested substitutes. Thereupon the inventor said to his employé that, if the employé could give him a solution, he would give the employé one half of what could be made from the invention, besides a considerable sum which he named. After some experimenting with the employé's methods, they proved successful and were incorporated into the specifications. The opinion rendered in behalf of the court, at page 603, states that, where the employer has conceived the plan of the invention, and is engaged in perfecting it, "no suggestion from an employé, not amounting to a new method of arrangement, which, in itself, is a complete invention, is sufficient to deprive the employer of the property in the perfected improvement;" and the patent was sustained. In Walker on patents, 4th ed. (1904), beginning with section 45, the learned author puts the matter *pro* and *con* very clearly. He says: "If one man does all the inventing, and another man does all the construction, the first is the sole inventor." He then takes up the case of *Agawam Company v. Jordan*, to which we have just referred. He then observes, as was said in *Packard v. Lacing-Stud Company*, that "to constitute a man an inventor, it is not necessary for him to have skill enough to embody his invention into a working machine, into a model, or even into a drawing." He also observes: "Where several independent inventions are

claimed by several different claims in a joint patent, and where one of these inventions was made by one of the joint applicants for the patent, without any co-operation of another joint applicant,
2646 the claim of the patent which covers that invention is void."

It will be noted that this, by implication, leaves standing all the claims except the one stated to be void. This rule, of course, applies *vice versa;* so that, in a patent issued to a sole inventor, the claims which would be void in a patent issued as a joint patent would be valid, although the other claims are void. We think that on this topic the rules of law which we have already stated could not be questioned, so that, unless Hunter was the originator of an inventive idea which was an essential part of the claims in issue, nothing which he might have contributed to any part of the patent could be of avail to the respondent on what we have described as the first defence set up under its amendment to its answer.

The important witness for the complainant, Rudolph M. Hunter, is supported by the probability which we have spoken of, that, as the complainant's solicitor, he would not commit the grievous fault with which he is charged by the respondent. Against this the respondent says that Hunter might have assumed that what he did was within the usual privilege given to a solicitor in making amendments. This, at most, is only a possibility, which, in view of Hunter's admitted clientage and reputation as a patent solicitor, is more an improbability than a probability. The crucial day in the case was January 7, 1895, on which day it is agreed Liddell was at Hunter's office for the purpose of signing and making oath to the application. Hunter testifies that on that day the changes which appear in the copy of the patent attached to this opinion, which we have already spoken of, were made, and a clean draft of the entire application was completed, and thereupon the oath taken by Liddell. There is no question that the oath was taken that day, and Hunter testifies expressly that the application was then completed. On the other hand, Liddell, who was called by the respondent, testifies that his visit at the office was very hurried, that he did not read the specification and claims, but merely turned them over, and made oath to them, assuming that everything was right. The respondent computes and proves that it would have required two hours to have made a clean draft of the application. It also computes, but makes no proofs in reference thereto, that it would have required at least half an hour to have read the application in its new draft,
2647 and also urges, without proof, that Liddell is very slow in his methods, while Hunter is as quick as lightning, and that it would have taken a long time for Liddell to have suggested the amendments then made. It, therefore, computes that it would have been impossible to have transacted at that interview all the complainant maintains to have been transacted. On the other hand, as both Liddell and Hunter were each testifying from memory, without any visible thing contemporaneous as of that particular day to support their recollection either *pro* or *con*, the respondent's entire contention is purely inferential and problematical, and not supported by the kind of proof required by the authorities which we

have cited with reference to issues of this character. The record contains a letter written by Hunter between January 1 and January 4, as shown by his letter book, in which he states to one Haverstick, who represented the predecessor in title of the complainant, that he enclosed the draft of the application for the patent, and observed that the draughtsmen had had a hard time to unravel the details, and that some parts were still wanting, but that he Hunter, had made some memoranda of the parts on which he needed information, which memoranda he had annexed to the enclosed specification. Hunter thus made clear that at least three or four days before January 7 he had gone over the application and informed himself as to what amendments were needed. It follows that he knew what they were, and probably had so far reflected on them that he could readily put them in form whenever he met Liddell.

The witnesses relied on by the respondent are Liddell and Drury. Each of these testifies only from recollection, under the circumstances which we have explained. We, also, find special grounds for questioning the recollection of each so far as this case is concerned. Drury, for instance, testifies at first that, during the whole progress of completing the application, he never met Liddell to his recollection. In answer to questions, he says at first: "I have no recollection of seeing Mr. Liddell at any time;" and then he says, in reply to distinct questions, that he could not swear that he never saw him. Subsequently he states that he had an impression that Mr. Hunter sent Mr. Liddell to his office with Liddell's working drawings; "in fact," he adds, "I am pretty sure of having some interview with Mr. Liddell with the drawings." The undoubted
2648 fact is that he saw Mr. Liddell twice, first on or about September 23, and again on October 15. The second interview was as testified to by Rudolph M. Hunter, as fortified by the correspondence in the record. Hunder wrote Liddell that Drury needed some explanations of the drawings, to which Liddell assented by letter. This is supplemented by the statement by Hunter that Liddell came to Philadelphia, which was the place of residence of Hunter and Drury, on the Tuesday following October 12, which was October 15, for the purpose of meeting Drury, and did meet him. The fact of this second meeting does not seem to be questioned, although we have given the entire substance of Drury's testimoney in reference to his interviews with Liddell.

Drury testifies that he is not able to find any Liddell tracings or drawings, or written memoranda or book entries in regard to the matters under discussion. In reply to questions, he is unable to give any dates whatever, and fixes times only relatively, as we will show further hereafter. He admits that, a little while previous to his testifying at the summons of the respondent, he told the complainant's solicitor that if he saw the drawings he could identify them as being his work, but he adds: "The circumstances under which the drawings were made I do not recollect." Drury testifies that he had no dates, his precise language being, "I do not know any date." He nowhere makes any direct statement tending to show whether he did anything whatever after January 7, 1896,

which is the crucial period. Being asked on cross examination whether he is able to state the date when he has the crucial interview with Mr. Hunter, as testified to by himself, and was "able to state the exact date," he replied: "I am not." Being also asked as follows: "Do you see on the blue-print, or in connection with the sketches, or have you from any other source reason to doubt that sworn testimony of Mr. Hunter" as to pencil marks on the blue-print, he replied, "I have not." The following is even more important. He testified that all the information he received to enable him to indicate any changes he received from Hunter. This ignores entirely the interview with Liddell on October 15. On re-direct examination he was asked to refresh his recollection and state whether Hunter made pencil sketches on the first blue print
2649 in the presence of the witness, or in his absence. He replied: "My only recollection is, as I have said, taken from Mr. Hunter's method of giving me instructions,—is that those pencil sketches were made while I was there, and he was telling me what changes to make on the drawing." This led to the following question and answer on cross examination resumed: "Well, you have no positive recollection of seeing Mr. R. M. Hunter make those pencil marks on the first blue print, but you think it altogether likely he did make them in your presence; is that about it?" He answered: "That's about it." Thereupon he was re-examined by the respondent, who called attention three times to the word "about," and asked him to frame his testimony "exactly to suit" himself on the question whether he was present or absent "when Mr. Hunter made pencil sketches on the first blue print." He replied again even more positively as follows: "As I have said, it would be right in line with Mr. Hunter's practice and his method of instructing me to make those sketches on that blue-print, so as to explain to me the changes that were necessary, and that were made on and shown in the second blue-print." Thereupon the witness was dismissed without further examination by either party.

The theory of the respondent on this particular branch of this topic, which is essential to its case, is in substance as follows: Whereas Hunter testified that his pencil sketches were made in the presence of Liddell, Drury testified that Hunter made them in the presence of Drury. Even if Drury had undertaken to state that he had any personal recollection in the matter, the probability might be that Drury, having forgotten that Liddell came to him on October 15 and made certain explanations, assumed, by mistake, Liddell's second visit to him as having been made by Hunter; and, in like manner, he may well have carried forward Liddell's first sketch on manila paper to the second interview, whether it was with Liddell or with Hunter, as to which he again refers to the same kind of paper. Certainly it is, however, that, on the proper rules of evidence, inasmuch as there was no further examination to overcome the inference which follows from what we have quoted from Drury's testimony, that it was in no part based on personal recollection, it should all be stricken out. As, therefore, the respondent produced

no other proofs to support its proposition in this particular,
2650 it necessarily falls to the ground. The examination which
we have given of Drury's testimony shows that, as it was produced after so many years under the circumstances which we have explained, it would be of little value with regard to any issue whatever, and, certainly, it fails to be of that clear and convincing character which we have shown the rules of law require from this respondent.

As we have said, the only other witness relied on by the respondent is Liddell. His testimony impresses us as discursive and hazy, and not based on personal recollection in any important degree. Aside from the facts to which we have referred, that it was given after many years, that his mind had evidently been occupied in part with other analogous matters, so that there was peculiar liability to confusion of the memory, and that he had no occasion to charge himself with this particular matter, and evidently had not done so, it would be too burdensome for ourselves and for others if we should attempt to elaborate the reasons for our estimate of it. His testimony cannot be judged in the pointed way in which we have judged Drury's. To estimate it properly, we have been compelled, contrary to our custom, to read nearly the whole of it. We cannot photograph it to others in an opinion so that it may appear to them as it appears to us. On the whole, we need only say as to the respondent's witnesses that, for the issues we are now considering, we must look for support with reference to its amendment to the answer beyond its oral proofs.

Returning again to the first issue presented by this amendment, that is the nature and extent of what the respondent claims that Rudolph M. Hunter contributed, we pass by, for the reasons we have stated, all mere mechanical details, and what relates only to the claims other than Claims 1, 2 and 7. We think Drury properly puts the essence of what remains. He was able to do it, notwithstanding the condition of his personal recollection, because he was an experienced draughtsman, he had the patent before him, he was generally acquainted with the subject-matter, and was, also, assisted by the drawings relating to the patent in suit in their second and third stages. The sketch which represents the first stage has been lost; we shall return to it later. As put by Drury, the true issue on
this part of the case is a claim that Hunter, on examining
2651 the movements shown in the first blue print, namely, that of
eccentric gears, came to the conclusion that mechanism of that kind would be inoperative for the reason that the gears produced rotary movements, and he saw that cams with intermittent movements would have to be substituted; and that, thereupon, Hunter developed the cam shown in the patent. The substance is, briefly, that Liddell gave the forming-plate an entire revolution, while Hunter invented and substituted for it the oscillating motion which is made an element in the claims. The Liddell invention first appeared in pencilled sketches brought by Liddell to Hunter's office, which sketches passed into Drury's hands for him to prepare, with their aid, suitable drawings to be attached to the specifications

and claims to be prepared by Hunter. These sketches are not found. Without them, everything which might with them be called on to support the testimony of the witnesses *pro* and *con* is thrown into confusion; and without them no firm ground is found beyond the patent itself. There are some probabilities, however, which are quite as much with the complainant as with the respondent. Liddell seems to be positive that these drawings, which we call the first stage in contradistinction from the blue-prints, which we have called the second and third stages, showed only a rotary movement; but Drury's recollection is, and he is undoubtedly correct, that he was unable from those sketches to produce drawings showing an operative mechanism. Yet they showed the gears in lieu of the cam, as testified by him; and, if the drawings pointed out specifically a rotary movement, it is difficult to perceive wherein Drury, who also had the aid of Liddell's explanations on October 15, should fail in finding operativeness. A lack of operativeness might arise from the combination of gears with the oscillating movement of the forming-plate, but not with the rotary movement. Hunter, however, had the same material for preparing the application, that is, the specification and claims, that Drury had for preparing the drawings; yet Hunter, whatever he had before him, drew the claims under consideration showing clearly an oscillating movement. The natural line would have been that Hunter developed some suggestions given him by Liddell, so that the probability is that his sketches, whatever else they contained, did contain the oscillatory suggestion, although Hunter admits it cannot
2652 now be fully determined whether they did or not. He insists, however, that the real invention was the same as that set out in the claims as he prepared the application. As Liddell admits, the application and the claims exhibit oscillatory movements so cleary that the court cannot perceive how he could have overlooked that fact at the time he took his oath, no matter how slight the examination which he gave the papers as drawn by Hunter.

But there is a further proposition which seems to be a difficult one for the respondent to overcome. From what follows it will be seen that we are of the opinion that the respondent, on its proposition that the application was redrawn by Hunter after the last interview between Hunter and Liddell, has not produced sufficient evidence of the kind required on issues of this character to overcome the *prima facie* effect of the granting of the patent in suit. Therefore, we must assume with regard to the particular proposition which we are considering that the entire specification and claims were completed at that interview; and, therefore, further, that whatever was done, whether it originated with Hunter or Liddell, was accepted and acquiesced in by the latter. Let us assume that the original sketches, and everything suggested by Liddell prior to the interview of January 7, gave only a rotating forming-plate. Let us also assume that the oscillating forming-plate was then suggested by Hunter. Nevertheless, the statement in Liddell's specification, to the effect that the return movement of the forming-plate is unim-

portant, would be true. Hunter testified as follows: "I distinctly understood that it was immaterial whether the forming-plate was made to oscillate back and forth, or to rotate completely around in a return movement." The forming-plate does duty only during its forward movement. When it has accomplished that movement it has met the conception of the inventor, and the whole of it. What follows, that is, whether it returns to the point where it recommences its duty by completing the rotation or by oscillating, is a mere question of convenience and no essential part of the invention; although, as the claims in issue are drawn, under the circumstnces, so far as they appear on this record, the patentee probably barred himself from claiming that a forming-plate which does not oscillate would infringe. Therefore, on the extreme hypothesis in
2653 favor of the respondent, the case would stand as follows: Granted that Liddell came to Hunter with a forming-plate which performed the new function in the manner required by his conception; granted that the only method shown by Liddell of returning the forming-plate, after it had performed its duty, to the point of recommencing its duty, was by a rotary movement; granted that, thereupon, Hunter had suggested to Liddell that it was more convinient to oscillate than to complete the revolution; such a suggestion would not have interfered with the inventive conception, but would have shown only a method which, in the mechanical arts, would be merely an equivalent. Certainly, under those circumstances, it would not be pretended that Hunter was either a joint or a sole inventor, with reference to the fundamental conception shown in the claims in suit. The most that could be said was that he suggested an alternative movement, as to which it has not been shown to us that any inventive idea was involved therein. In conclusion, we need only say that no proposition brought to our attention by the respondent on this particular topic has been supported by it with such quality or quantity of proofs as to justify us in overthrowing on their account the patent in issue, so far as relates to Claims 1, 2 and 7.

A brief statement of the method in which the respondent presents to us the other topic covered by its amendment to the answer, adding, in order to make the account complete, a few matters not questioned, would be as follows: September 16, 1895, Liddell brought to Hunter's office the sketches which we have called stage one; either at Hunter's office, or from his office, they got into the hands of Drury, who desired explanations from Liddell, which he obtained, as already stated, on October 15; on October 28 Drury rendered Hunter his account for services in that case, and no trace is found by Drury, or anyone else, of any subsequent account or charge; on or about the 3d of January Hunter, having received back from Drury the blue prints which he had evolved from Liddell's original sketches, drew the application for the patent and sent it to Haverstick, a representative of the complainant's predecessor in title, with a letter, stating that the operative details had not all been accomplished, and that, nevertheless, he, Hunter, had written a specifi-

cation, to which he had added that he had annexed a mem-
2654 oranda of the parts wanting. This specification was, undoubtedly, a part of the application for the patent, which, he also wrote, he enclosed in the letter. January 7 Liddell was at Hunter's office, and then, on the respondent's theory, Liddell made oath to the application in the form in which it stood prior to the amendments shown by the exhibit which we will attach to this opinion. The respondent further claims that, after Liddell took the oath, Hunter redrew the application, including claims and specification, and caused the drawings to be modified. The respondent produced Drury as a witness, whose testimony we have already commented on. According to his testimony, his first drawing was made from a sketch given him, Drury, by Hunter's brother, and, to the latter, by Liddell. This was on manila paper. Drury further testifies that, after he prepared his first drawing, known as blue-print No. 1, the machine was declared by Rudolph M. Hunter as inoperative. He called him, that is, Drury, to his office, explaining to him the changes he thought necessary, and endeavored to make them clear by pencilled sketches on the blue-print. Thereupon, as Drury further testifies, he asked Hunter for an operative drawing, which he subsequently brought to him, also on manila paper. Drury makes the interval of time beween the pencillings on blue-print No. 1 and the operative drawing on the manila paper brought him by Hunter to have been a matter of about two or three days; as we have already said. As already partially explained, the respondent's further proposition is that these interviews between Liddell and Drury were after January 7.

We have shown to what extent, if any, this part of the respondent's case had support from anything beyond the testimony of Drury; and we have analyzed Drury's testimony, and shown that, so far as this case is concerned, it is not of the character which the law requires. There is no evidence or probability favoring the respondent's view on this topic, the pith of which we have not stated. On the other hand, it is to be noted that Drury makes no attempt to claim that any of his interviews were after January 7. All that the respondent has upon which to base the theory that they were are the alleged facts that the manila paper was produced to Drury by Hunter two or three days after the interview between the two in
which the pencillings were made on blue-print No. 1, and
2655 that Hunter testifies that all those pencillings were made when Liddell was present, and that his last presence was on January 7, so that, therefore, it necessarily follows that the production of the manila paper by Hunter was two or three days after the date last named. It cannot well be doubted that whatever pencillings were made on blue-print No. 1 were made by Hunter when Liddell and Hunter were present on January 7; but, as already suggested, Drury had entirely forgotten Liddell's visit to him on October 15, undoubtedly, with blue-print No. 1, and he might easily, after the long interval of time, innocently mistake an alleged interview with Hunter for the one with Liddell of October 15, and, also, innocently, have carried forward into the last interview the manila

paper which he saw when the matter was first brought to his attention. Therefore, we think the respondent's case fails to show sufficiently any interviews between Hunter and Drury after January 7.

On the other hand, Hunter testifies expressly that the work was completed on January 7. He is supported by his ledger entries, to which we have referred, made under date of January 7, containing a charge of ten dollars for "extra drawings giving out views, etc., to expert," and a further charge for drawings for the same case. His other charges were the same which customarily carry through the whole work until the application is filed in the Patent Office; and they were made on September 23. No later entry than January 7 is found on Hunter's books, and, as we have said, none later than October 28 on Drury's books. The respondent undertakes explanations in reference to these entries, but they are purely hypothetical and not supported by any facts brought out on the examination of witnesses. These entries indicate that presumptively everything was closed on the part of Drury on October 28, and on the part of Hunter on January 7.

However, we need not pursue the examination of this evidence further. Our general conclusion is that which we have already indicated, and we fail to be satisfied that anything material was done by Hunter in the absence of Liddell, or without his approval. We must add, however, that a legal proposition lies squarely across this branch of the defence. We are unable to see any reason why any alleged infringer should be permitted collaterally to attack a
2656 patent on the basis of fraud in its procurement, especially fraud under the particular circumstances alleged here. Whether or not an oath shall be required from an inventor before a patent can issue to him, whether or not he may consent in advance that his solicitor shall take his conception, and do whatever is necessary in addition thereto to secure a patent therefor, and whether or not a solicitor may contribute a substantial portion of the apparent invention and claim it at the Patent Office as his sole production, or one in which he jointly took part, or surrender it entirely to whomsoever may be co-operating with him, are, so far as alleged infringers are concerned, mere matters of regulation. Somebody is entitled to a patent for the invention, which, if issued in accordance with the regulations of the United States, no matter to whom, the infringer has no right to infringe. He is not deprived of anything that belongs to him by reason of lack of regulations, or by reason of the violation of the same, if they existed. We regard it as settled that this defence is not open to this infringer on any view of the facts. *Rubber Company v. Goodyear*, 9 Wall. 788, 797; *Railroad Company v. Dubois*, 12 Wall. 47, 63, 64; *Mowry v. Whitney*, 14 Wall. 434, 441.

This leaves only the question of Claussen's alleged priority. What has already appeared in this opinion ought to make it clear without further statement on our part that, under the rules of evidence to which we have referred, Liddell cannot be carried back further than January 7, 1896. Prior to that he was in what may be described as a preliminary condition of one who afterwards becomes an admitted inventor. We cannot undertake to phrase it by any other word than

the general one "preliminary." We think that Claussen cannot, under the rules of evidence applicable hereto, find a date earlier than January 17, 1896, even if he could establish a date so early as that. As we understand the record, he was, prior to that date, substantially in the same preliminary condition that Liddell was prior to January 7, except, however, that Liddell had one clear advantage over Claussen from September 23, 1895, six weeks earlier than Claussen first appears in the art in any form. From that date to January 7 Liddell was constantly working towards the production of a patent,

while there is nothing in the record to show that, prior to
2657 January 17, if so early as that, Claussen had any purpose whatever of bringing his conception, in whatever condition it was to a practical result. In fact, taking the case by and large, what the Circuit Court of Appeals for this circuit observed in connection with the quotation from Park's History of Medicine, in *Decco Co. v. Gilchrist Co.*, 125 Fed. Rep. 293, 296, applies. Liddell was working toward a practical result, though, perhaps, slowly and intermittently, while, so far as the record shows, Claussen was only thinking and waiting.

The position of the complainant is that, at no time prior to his examination of Liddell's patent, which was in May, 1896, did Claussen in any way conceive, or in any way represent, any operative combination like that in issue here. We have no occasion to establish so late a date as that named by the complainant. January 17 is enough for all the purposes of the case. Prior to January 17, Claussen had proceeded so far as to evolve three drawings. Claussen first testifies with reference to what is called "Claussen Exhibit No. 1," which is reproduced in the record under the form of Claussen Exhibit No. 2. This bears date of November 22, 1895. We will return to it again. He then testifies in regard to Claussen Exhibit No. 3, which is described on its face as a drawing started November 23, 1895, and finished January 17, 1896. After finishing his testimony based on supposed recollection refreshed by these drawings, and, after he had been under examination at different dates from December 8, 1902, to January 5, 1903, the case was reopened for this further examination on the motion of the respondent, which stated that the sketch known as Claussen Exhibit No. 5, reproduced in the record as Claussen's Exhibit No. 6, had been overlooked

The treatment of these various drawings, both in taking the proofs and before us, has been confused. This, perhaps, was a necessity of the case, arising out of the fact that they were intertwined without much regard to priority of dates in such a way they devoured each other. Inasmuch as Claussen Exhibit No. 3 was not finished until January 17, it bears, of course, on the question of priority only incidentally. Claussen's Exhibit No. 1 was a mere sketch on a sheet of which the lower one third contained two other figures, below which were written the words "4000 stitches per minute. J. B. Merrow & Sons." Claussen wrote those. J. B. Merrow & Sons were
2658 manufacturing "crocheting machines and special machinery."

Claussen worked from time to time on drawings for them, and, as he says, having a little leisure he sketched that mechanical motion

on the same sheet. He did not remember whether the latter or the sketch No. 1 was made first, but he presumed that it was not probable that he started at the bottom of the sheet. Nor has he shown that this sheet was ever exhibited to any other person, or that it was more than a tentative, speculative drawing. In response to three different questions put him by the respondent, in connec- with Claussen's Exhibit No. 1, in order to bring out something specific in its favor, he testifies that he did not remember what kind of a folding bed he had in mind, whether it was a reciprocating one or a rotating one; that he did not remember what kind of a movement he intended for the folding bed at the time he made that sketch; and, finally, as follows: "I don't really remember what kind of a bed I should have used at the time, for if I had any idea I should have indicated it on the sketch."

The next sketch in the order of the respondent's proofs was Claussen Exhibit No. 3. This, as we have said, was started on November, 23, 1895, and finished on January 17, 1896. Claussen says of it that Exhibit No. 5, which will come later, bearing date November 6, 1895, was only a "free-hand sketch," while No. 3 was "a drawing worked up a little bit more elaborate." The important facts, however, are that Claussen testifies that Exhibit No. 3 was made in the latter part of 1895 and in the early part of 1896, "not as a working drawing," but to "record" his invention of the rotating conveyer, with the oscillating carrier and an oscillating tucker-plate, so, as he says, that "the general character of that invention, so far as it had been developed, might be preserved." This is a striking admission that even Exhibit No. 3, which was completed January 17, did not indicate that his invention had been fully developed. The more important feature of his testimony with reference to this exhibit is the following:—

"Q. Who invented that combination of a rotating conveyer and oscillating carrier pivoted to that conveyer, and oscillating toward and from the center of rotation of the conveyer? A. I did. Q. How early did you make that invention? A. Between November 23, 1895 and July 17, 1896."

2659 Then being asked what paper evidence he had of the dates he answered, "Claussen Exhibit No. 3." Being asked again by the respondent, for the purpose of getting a more specific date, when he invented the combination spoken of he answered, "three or four days before, or three or four days after, January 1, 1896." In this way the respondent endeavors to bring the invention of the combination spoken of as near as possible to January 7, which we have shown to be the complainant's date. The only thing that can possibly be said about this, however, is, first, that the combination here spoken of by Claussen is, on the respondent's theory, the pith of his invention; and, second, that, on the settled rules of evidence we have stated, Claussen's testimony at this point fails to fix an earlier date than January 17.

We are coming now directly to Claussen's Exhibit No. 5, reproduced in the record as Claussen Exhibit No. 6. We refer again to the fact that Claussen first testified, before he saw Exhibit No. 5, that his invention was between November 23 and January 17. We now

call attention to the further fact that he also testified before he saw Exhibit No. 5 that the tucker-plate vibrating on trunnions originated with him, and originated with him in the sketch of November 22, 1895, which was Exhibit No. 1. In other words, he thus positively makes November 22 the date of his conception of a vibrating tucker-plate. We should, in this connection, observe that he uses the word "oscillating" and the word "vibrating" as synonymous. In the course of his examination subsequent to the above testimony, and after Exhibit No. 5 was brought to his attention, various questions were put to him by the respondent which enabled him to reframe a very considerable portion of his testimony which we have cited. As we have said, nobody questions Claussen's integrity, and his modified testimony is probably nearer the absolute truth than that which he first gave. We are, however, able to get at the facts sufficiently for our purposes without relying on his evidence. The only other general facts to which we need refer with regard to Exhibit No. 5 is that the respondent describes it as "a pencil sketch," and, as we have seen, Claussen as "a free-hand sketch."

We are now able to take up all these sketches in the logical order. First in date, of course, is Claussen Exhibit No. 5, of No-
2660 vember 6, 1895. The next historically is Exhibit No. 1, drawn in the manner we have seen in connection with work done for J. B. Merrow & Sons, and, so far as we can discover, begun and completed on November 22, 1895. The third is Exhibit No. 3, commenced on November 23, 1895, and completed January 17, 1896. The latter is the only one claimed by the respondent to approach completeness, or to have the semblance of a working drawing. As, however, we have found that Liddell's conception was complete earlier, that is, on January 7, this Exhibit No. 3 necessarily goes out of the case on the issue of mere priority, and is useful only for illustration in that Claussen testifies that the mechanisms shown by it are the same as those shown by the sketch of November 6.

It is apparent throughout the record, and seems not to be questioned, that the penciled sketch of November 6 made use of a Vee-plate in forming the diamond fold. Inasmuch as there in nothing in the patent in suit, or in the record, to show that Liddell is limited to the Deering bag, we have no occasion to consider precisely the form of the diamond fold made by the Vee-plate. The respondent says that the significance of Claussen Exhibit No. 1, of November 22, is that it delineated "the idea of employing in a paper-bag machine, without any Vee-plate, a tucker-plate oscillating upon fixed trunnions," and so on. Stone, one of the respondent's witnesses, has made clear the distinction between a machine operating with a Vee-plate and one, like Liddell's, operating without a Vee-plate, and thus between Claussen's Exhibit No. 5 and the sketch of November 22, 1895; and this distinction, we think, renders it impossible to maintain that, in the sketch of November 6, Claussen had any clear conception, or, indeed, any conception whatever, of what is described in the claims in suit as a "forming-plate," noting that the word "forming-plate," both inherently and in connection with the specification of the Liddell patent, means something very much more than the tucker-plate

BLURRED COPY

described by Claussen in the sketch of November 6. Stone's illustrated diagram, in connection with his testimony, is exceedingly clear. He does not directly illustrate Claussen's Exhibit No. 5, of November 6, but the Claussen Exhibit No. 3, of January 17, 1896, the mechanisms of each of which, as we have already stated,
2661 are said by Claussen to be the same, always, of course, with the qualification that the November 6 drawing is a free-hand sketch, while that of January 17 approaches nearly to a working drawing, if not fully so.

The function of the tucker-plate, in the drawing of January 17, is described by Claussen in the following language: "The tucker-plate P swings on its trunnions, its free edge defining the main transverse fold of the bag blank." He gives it no other function than this, and his drawings show that it can have no other. He further illustrates the respondent's Claussen patent, and also the respondent's machine. He describes their tucker-plate as "provided with two opposite disposed side nippers," which side nippers, he adds, "are provided with suitable mechanism, not shown, to open and close them at proper times." The origin of these side nippers he attributes to the Claussen Exhibit No. 1, dated November 22, 1895. Here he shows no Vee-plate. With reference to his illustrations of Claussen Exhibit No. 5 he claims for the tucker-plate only that its free edge defines the main transverse fold of the bag blank, while, for the other mechanisms, he says that when the tucker-plate has continued its revolution nearly ninety degrees it has folded the open end of the bag blank into a diamond form. The difference in function between the so-called tucker-plate devised November 6, and the tucker-plate claimed to have been exhibited by the drawing of November 22, as thus found by Stone in the respondent's machine and the respondent's patent, is so broad that we need not comment on it, except to say that, in the latter, the so-called tucker-plate does apparently all the duty of the complicated combination of the tucker-plate, the Vee-plate, and the other details of the sketch of November 6, the numerous parts of which can be understood from what we have said, but are better illustrated by Mr. Stone's drawings, to which we have referred. Here, certainly, is no such equivalency as would deprive the complainant of its simple, but ingenious, invention, all the more ingenious because simple, shown in his patent and adopted in the respondent's mechanism, as against the complicated device of November 6. All the details of the sketch of November 6, when operating together, may have produced the same result as the Liddell simple forming-plate, but neither separately nor together do they represent Liddell's conception. On the other hand,
2662 Stone seems to us to have made clear the essential distinction between the two, which is that Liddell had what he truly describes as a forming plate, while Claussen suggested only a tucker-plate.

Thus we have disposed of Claussen Exhibit No. 5 and Claussen Exhibit No. 3. This leaves only Claussen Exhibit No. 1. This, we think, exhibited the same conception of the forming-plate which Liddell had; but, as we have already seen, it failed to show a com-

bination thereof with the cylindrical movement called for by the claims in issue. Moreover, the sketch is shown to have been fragmentary and in pencil. It had no working parts, and nothing more was ever heard of it, except as it became merged in the revival of Claussen's general conception, which took place in 1896, at a date which, as we have shown, cannot be fixed by the evidence under the rule which guides us at any time prior to January 17. What then occurred is justly described in words which imply a development. The respondent puts it:—

"What Mr. Claussen did in 1896 with the mechanism of Claussen Exhibit No. 5 was to take the Vee-plate, and, also, the tucker-plate, from that mechanism and surround them with a new environment and develop them into the machine of the Claussen Vee-plate Patent No. 574,020, and to contemporaneously develop the other parts of the mechanism of Claussen Exhibit No. 5, together with its tucker-plate, into the Claussen patent No. 598,497."

The latter patent is the one according to which the respondent's machine was built. The period of this final development began apparently in February, 1896, and ended with the filing of Claussen's application on July 20, 1896, being, as we have shown, nearly six months after Liddell's application was filed, and four months after Liddell's patent issued, and nearly seven months after January 7, when Liddell's conception had been fully put in form in the application drawn by Hunter. Claussen says that, after looking the Liddell patent over, he concluded that he had a far better machine than Liddell, and he proceeded to finish the drawings which he began about the first of February; so that from November 22, 1895, until February, 1896, Claussen Exhibit No. 1 was never heard of so far as this record goes, and was never heard of in definite form until Claussen's application was filed on July 20, 1896. Not only, therefore, did it fail to show the combination of the claims in
2663 issue, because Claussen's testimony, which we have already cited, distinctly strikes out the cylinder; but it remained so long in a fragmentary, pencilled, quiescent condition that, so far from meeting the burden of proof which we have shown rests on the respondent on this question of priority, the case, as a whole, tends to lead the court to believe that Claussen, soon after he sketched his Exhibit No. 1, ceased to have any interest therein. In other words, the mind of the court leans towards the proposition that Exhibit No. 1 was a purely tentative sketch, which was given no definite form until several months after the Liddell application was filed.

In addition to all the foregoing, the case has the very common aspect of one wherein two different inventive minds were working almost contemporaneously on the same conception, one of whom put it into definite form, so as to apply successfully for a patent thereon before the other succeeded in accomplishing any complete result. In this way Liddell gained the position which we have already referred to, as described in *Decco Company v. Gilchrist Company*, 125 Fed. Rep. 293 *ubi supra*. The law applicable under such circumstances has been often laid down, and always with a result favorable to the complainant in this litigation. It has never been better stated than

by Judge Sprague in *Johnson v. Root*, 1 Fish Pat. Cas. 351, Federal Cases 4711, 2 Cliff. 637. Although this was a mere charge to a jury, it was incorporated by Mr. George T. Curtis into his authoritative work on patents, 4th ed., at page 333 and sequence. There the rule was stated under circumstances where it worked against the patentee, to the effect that, if the patentee had not perfected his invention, and did not use due diligence to carry it into effect, and, in the meantime, someone else had invented, and incorporated into a practical, useful machine, the same invention, the patentee could not by a subsequent patent appropriate to himself what was embraced in the former machine, even though the patentee had previously filed a caveat. This ruling was affirmed on motion for a new trial in the same case by Mr. Justice Clifford in 2 Cliff. 108.

The application of this principle in behalf of a patentee is even more marked, as explained in Walker on Patents, 4th ed. (1904), at page 66, where the learned author gives the reason for allowing,

as he says, a patented invention to date back to a written de-
2664 scription, or to a drawing, or a model, as the case may be,

while an unpatented invention, which is set up to negative the novelty of a patented invention, is not allowed to date back to either of those things. The law as applied to the circumstances of this case is laid down very positively in *Coffin v. Ogden*, 18 Wall. 120, 124. That opinion says on this topic: "The law requires not conjecture, but certainty. If the question relates to a machine, the conception must have been clothed in substantial forms which demonstrate at once its practical efficacy and utility." In conclusion on this topic, prior to January 7, 1896, Liddell's conceptions were, from day to day, at least as fully developed as Claussen's; and, as he first secured his patent, the authorities give him priority.

The impressions which we had at the close of the trial of this case are substantially the same as the conclusions herein expressed. Nevertheless, as we fully understand the difficulties in the way of obtaining, in the light of the state of the art as it was nearly a third of a generation ago, a true perspective of novel and complicated mechanism which was not put into practical use at or near the time of its origin, we have carefully re-examined the records and briefs. On the whole, the result is that we are of the opinion that the record discloses nothing to meet the presumption of patentable invention with reference to Claims 1, 2 and 7 of the patent in suit, and that the complainant has sustained the burden required on the issue of infringement. We are also of the opinion that the respondent has not sustained any of its special defences according to the rules of evidence we have explained. Therefore, on this record, we must find for the complainant.

Ordered, that there be an interlocutory decree in accordance with Rule 21 for an injunction and a master on Claims 1, 2 and 7.

2665 *Citation on Appeal.*

UNITED STATES OF AMERICA, *ss:*

The President of the United States to Eastern Paper Bag Company, a corporation duly organized and existing under and by virtue of the laws of the State of Connecticut, a citizen of said State, having its principal place of business in the city of Boston and State of Massachusetts, Greeting:

You are hereby cited and admonished to be and appear in the United States Circuit Court of Appeals for the First Circuit, in the city of Boston, Massachusetts, on the first day of February next, pursuant to an appeal duly obtained from a decree of the Circuit Court of the United States for the District of Maine, wherein the Continental Paper Bag Company, a corporation organized and existing under and by virtue of the laws of the State of Maine, a citizen of said State and a resident and inhabitant of the State and District of Maine, is appellant and you are appellee, to show cause, if any there be; why the said decree, entered against the said appellant, should not be corrected, and why speedy justice should not be done to the parties in that behalf.

Witness, the Honorable William L. Putnam, Judge of the Circuit Court of the United States for the District of Maine, this twentieth day of January, in the year of our Lord one thousand nine hundred and six.

W. L. PUTNAM,
U. S. Circuit Judge.

UNITED STATES OF AMERICA, *District of Maine, ss:*

JANUARY 23, 1906.

We hereby acknowledge service on us, as attorneys for the Eastern Paper Bag Company, of the witin citation.

BETTS, BETTS, SHEFFIELD & BETTS,
Attorneys for Eastern Paper Bag Company.

Order Transmitting Original Papers and Drawings.

January 20, 1906.

PUTNAM, *J.:*

It is hereby ordered by the Court that all the original papers, drawings and other exhibits, which are in evidence in the above-entitled case, and which are now in the custody of this court, shall be sent by the clerk of this court to the clerk of the Circuit
2666 Court of Appeals for the First Circuit, at Boston, Massachusetts, to be safely kept by the clerk of said Circuit Court of Appeals, pending the appeal to that court, from the interlocutory decree of this court in the above-entitled case, and that those original papers and other exhibits shall be returned by the clerk of said Cir-

cuit Court of Appeals to the clerk of this court, after that appeal shall have been disposed of in that court. And it is further ordered that the said original papers, drawings and other exhibits may be transported to the clerk of the said United States Circuit Court of Appeals, and be returned by him to the clerk of this court, by such messengers or means as may be agreed upon by the parties to said appeal, or, in the absence of such agreement, then by such means or messengers as may be selected for that transportation by those clerks respectively.

By the Court,

JAMES E. HEWEY, *Clerk.*

2667 *Clerk's Certificate.*

UNITED STATES OF AMERICA, *District of Maine, ss:*

I, James E. Hewey, Clerk of the Circuit Court of the United States for the District of Maine, hereby certify that the seven volumes, entitled as follows:

Volume I., Complainant's Record, *Prima Facie* Proofs;

Volume II., Complainant's Record, Answering Proofs;

Volume III., Complainant's Record, Exhibit Book;

Volume IV., Defendant's Record, Continental Record, Volume I., Answer and Evidence;

Volume V., Defendant's Record, Continental Record, Volume II., U. S. Patents;

Volume VI., Defendant's Record, Continental Record, Volume III., Exhibits;

Volume VII., Proceedings in Circuit Court;

this certificate being attached to each of said volumes, contain and are a true copy of the record and all proceedings of said Circuit Court in the cause in equity entitled,

No. 546.

EASTERN PAPER BAG COMPANY, Complainant,

v.

CONTINENTAL PAPER BAG COMPANY, Defendant.

in said Circuit Court determined, the Petition for Appeal, Assignment of Errors, Supersedeas Bond on Appeal, Bond on Appeal, Opinion of the Circuit Court, and also the original Citation with acknowledgment of service thereon.

Witness my hand and the seal of said Circuit Court this thirty-first day of January, A. D. 1906.

[SEAL.] JAMES E. HEWEY, *Clerk.*

a

Volume VIII.

United States Circuit Court of Appeals for the First Circuit, October Term, 1906.

No. 635.

CONTINENTAL PAPER BAG COMPANY, Defendant, Appellant,
v.
EASTERN PAPER BAG COMPANY, Complainant, Appellee.

Appeal from the Circuit Court of the United States for the District of Maine from Interlocutory Decree (Putnam, J.), December 28, 1905.

Volume VIII.

Certified Copy of all Proceedings in said Cause After the Filing of the Transcript of Record of the Circuit Court of the United States for the District of Maine (not Including said Transcript of Record in Seven Volumes) on February 1, 1906, to and Including January 4, 1907.

1 United States Circuit Court of Appeals for the First Circuit, October Term, 1906.

No. 635.

CONTINENTAL PAPER BAG COMPANY, Defendant, Appellant,
v.
EASTERN PAPER BAG COMPANY, Complainant, Appellee.

Appeal from the Circuit Court of the United States for the District of Maine.

Before COLT, LOWELL, and ALDRICH, JJ.

Opinion of the Court.

December 24, 1906.

LOWELL, *J.*:

This is a bill in equity to restrain the infringement of Letters Patent No. 558,969, issued to Liddell for an improvement in paper bag machines. The following claims are in suit:—

"1. In a paper bag machine, the combination of a rotating cylinder provided with one or more pairs of side-folding fingers adapted to be moved toward or from each other, a forming-plate also provided with side-forming fingers adapted to be moved toward or from each other, means for operating said fingers at definite times during the formative action upon the bag-tube, operating means for the forming-plate adapted to cause the said plate to oscillate about

its rear edge upon the surface of the cylinder during the rotary movement of said cylinder, the whole operating for the purpose of opening and forming the bottom of the bag-tube, and means to move the bag-tube with the cylinder."

"2. In a paper-bag machine, the combination of the rotating cylinder provided with one or more pairs of side-folding fingers adapted to be moved toward or from each other, a forming-
2 plate also provided with side-forming fingers adapted to be moved toward or from each other, means for operating said fingers at definite times during the formative action upon the bag-tube, operating means for the forming-plate adapted to cause the said plate to oscillate about its rear edge upon the surface of the cylinder during the rotary movement of said cylinder for the purpose of opening and forming the bottom of the bag-tube, a finger moving with the forming-plate for receiving the upper sheet of the tube and lifting it during the formative action, power devices for returning the forming-plate to its original position to receive a new bag-tube, and means to move the bag-tube with the cylinder."

"7. In a paper-bag machine, the combination of the rotating cylinder with the bag-tube provided with one or more pairs of folding-fingers adapted to be moved toward or from each other, a forming-plate also provided with forming-fingers adapted to be moved toward or from each other, means for operating said fingers at definite times during the formative action upon the bag-tube, operating means for the forming-plate adapted to cause the said plate to oscillate about its rear edge upon the surface of the cylinder during the rotary movement of said cylinder for the purpose of opening and forming the bottom of the bag-tube, and connecting mechanism for timing the movements of the rotating cylinder and the forming-plate."

In order to decide this case, it is agreed that only Claim 1 need be considered, and that the decision upon the other claims will follow that reached regarding Claim 1. The Circuit Court found Claim 1 to be valid and to have been infringed by the defendant, and it decreed an injunction accordingly. From this decree the defendant has appealed to this court.

The several defences set up are as follows:—

I. The defendant alleges that the invention of the patent in suit, whatever that invention may be, was not made by the patentee Liddell, but by Hunter, his patent solicitor. He contends that from between the formal blanks which had been signed by Liddell, Hunter withdrew the specifications which had made part of the application at the time of its signature, and that afterwards, before filing the application in the Patent Office, Hunter inserted other specifications without Liddell's knowledge. We do not feel ourselves required to review the evidence adduced to support this theory; it is insufficient to establish that the serious crime alleged was committed by Hunter.

3 II. The defendant alleges that its machine is built in accordance with a patent to Claussen, No. 598,497, and that Claussen's invention antedates that of the patent in suit; hence he

urges (1) that Claussen anticipated the invention of the patent in suit, and so the patent in suit is invalid; or (2) that the two inventions are different, and so there is no infringement. But Liddell's invention is carried back to January 7, 1896, and no drawing of Claussen made before that time shows any operative combination which anticipates it. For a full treatment of this subject we refer to the opinion of the learned judge of the Circuit Court.

III. The important issue is non-infringement. The patent in suit is concerned with folding the bottoms of S. O. S. paper bags. In the prior art this had been accomplished both by a folding-plate reciprocating upon a plane, and by the operation of fingers upon a cylinder. The folding-plate and the cylinder had never been combined. The complainant urges with much probability that the reason why they had not been combined lay in the difficulty of operating a pivoted folding-form upon the surface of a cylinder. Two circles external to each can be in contact at but one point, while, in order that the folding-plate may operate, its end, as it moves upon a pivot, must remain for some distance in contact with the surface of the revolving cylinder. The problem may be solved by causing the pivot or axis of the folding-plate to yield away from the cylinder, or by causing the surface of the cylinder to be depressed away from the folding-plate. The patent in suit adopts the first device; the defendant's machine the second; and the crucial question before the court is this: Under all the circumstances of the case, is the second method, as compared with the first, within the doctrine of equivalents?

The defendant's machine is within the letter of the claims of the patent. These are broadly drawn. The only clause with which we need concern ourselves is that which claims "operating means for the forming-plate adapted to cause the said plate to oscillate about its rear edge upon the surface of the cylinder." The nature of the means is not specified. There is no express reference to the specifications, and in them the patentee twice makes it clear that he does not intend to confine his invention to the particular means described. Thus he says, "In place of these devices for controlling the movement of the plate E relatively to the cylinder C, the said plate may be moved or operated by any other suitable means," and "It is evident that the mere mechanism for securing the several movements to the different parts may be modified or changed in various ways without departing from the spirit of the invention, and I do not, therefore, confine myself to the details of construction here shown." This breadth of claims would imperil the patent were the real invention less broad, but the defendant has not pointed out, and we have been unable to find, any operative combination of a rotary cylinder and a forming-plate oscillating thereon earlier than the patent in suit. If, therefore, the patent is valid, it has a wide scope, and the mechanical arrangement used by the defendant is fairly within its terms.

The machine of the patent in suit is mechanically operative, as was shown experimentally for the purposes of this suit, but it has not been put into commercial use. No reason for the non-user

appears in the evidence, so far as we can discover. The defendant's machine has been an assured commercial success for some years. It was suggested at the oral argument that an unused patent is not entitled to the protection given by the extraordinary remedy of an injunction. This contention was not made in the defendant's printed brief. While this question has not been directly passed upon, so far as we are informed, in any considered decision of the Supreme Court, yet the weight of authority is in favor of the complainant. *Fuller v. Berger*, 120 Fed. Rep. 274; *Bement v. Nat. Harrow Co.*, 186 U. S. 70, 88, 90; *Heaton Peninsular Button Fastener Co. v. Eureka Specialty Co.*, 77 Fed. Rep. 288; *Crown Cork Co. v. Aluminum Stopper Co.*, 108 Fed. 845, 868; *Broadnax v. Central Stock Yard Co.*, 4 Fed. Rep. 214, 216; *Consol. Roller-Mill Co. v. Coombs*, 39 Fed. Rep. 803; *Campbell Printing Co. v. Manhattan Ry. Co.*, 49 Fed. Rep. 930.

As we find the claims in suit to be valid and to have been infringed by the defendant, the complainant is entitled to an injunction, and the decree of the Circuit Court must be affirmed.

The decree of the Circuit Court is affirmed, and the appellee recovers costs of appeal.

5 *Dissenting Opinion.*

ALDRICH, *J.:*

I agree to the conclusion that the patent in suit was infringed, but, notwithstanding infringement, I contend that injunction relief should not be granted because it is an infringement of a paper patent deliberately held in non-use for a wrongful purpose.

The injunction is not asked against the use of a machine which infringes one which the plaintiff below is making and vending under a patent, but against the use of a machine which infringes a patent under which the plaintiff is not making and vending, and one which the plaintiff intends to withhold from the public.

The manifest purpose is to withhold the infringed device from commercial use with the view of forcing another into the paper bag industry; and thus the concrete question is, whether equity by injunction will aid such a purpose with respect to a legal right.

There is no pretence in this case that equitable aid is asked to protect from infringement the patent the plaintiff is using in its business. In the aspect most favorable to the plaintiff, the relief sought is injunction protection to a business or an industry built up in using a particular invention, and through acquiring and holding in deliberate non-use a competing invention by way of protection.

It results, therefore, that a court of equity is asked not to protect from infringement the statutorily intended monopoly of the right to make, use and vend under a particular patent, but to protect a monopoly beyond and broader than that, a monopoly in aid of the rightful statutory monopoly of the patent in use. The proposition involves the idea of a secondary monopoly maintained to stifle patent competition in the trades and industries, and thus contemplates a condition which at once contravenes the manifest pur-

pose of the Constitution, and a monopoly of a kind and breadth and for a purpose in no sense ever contemplated by the statutory contract which safeguards the legal right to make, use and vend under a particular patent.

My contention is not that an individual or a corporation may not buy and hold competing patents and control them in a strictly legal sense, and recover such damages at law for infringement as
6 the rules of law accord to the owner for the invasion of such a legal right, but that equity should not by the arm of injunction aid the owner in a purpose to control and suppress invention and to retard intended benefits which in the ordinary course of manufacture and trade, uninfluenced by unconscionable and inequitable control, would naturally flow in trade and commerce.

The legal right of ownership and right of legal control of patent rights is not at all denied, but why should equity through injunction help a man or a corporation to so unreasonably exercise the legal right as to effectuate the withdrawal of patents from their position in the field of utility, to the end that a single and perhaps an inferior right or monopoly shall be exclusively forced into business and upon the public, for the pecuniary gain of private ownership at the expense of the public? The primary purpose of the framers of the Constitution was not unconscionable private pecuniary gain, but to encourage invention in the interests of general business and of the public, and the Act of Congress which followed soon after was to protect the right to make, use and vend, under a given patent, thus stimulating invention in the public interest, and there was no thought of giving countenance to the idea of acquiring and locking up inventions, and improvements upon inventions, to the end that the general benefits of invention should be turned back; and the idea that a court of equity should help to accomplish such a result is contrary to the spirit of equity and offends public policy.

Equity may look to the object of litigation and to the object of the relief sought, and thus, as already said, it is found that the primary and substantial object of the litigation here is not to protect the paper patent in suit, which is locked in non-use, but to aid the patent monopoly of another patent which is not in suit,—one which is in use, but not infringed; all to the real and manifest end that patent competition shall be stifled and destroyed, and that the business public engaged in the paper bag industry shall be driven to the use of a particular patent machine not covered by the patent in litigation and one not infringed.

Simple non-use is one thing. Standing alone, non-use is no efficient reason for withholding injunction. There are many reasons for non-use which, upon explanation, are cogent, but when
7 acquiring, holding and non-use are only explainable upon the hypothesis of a purpose to abnormally force trade into unnatural channels,—a hypothesis involving an attitude which offends public policy, the conscience of equity, and the very spirit and intention of the law upon which the legal right is founded,—it is quite another thing. This is an aspect which has not been considered in a case like the one here.

One may suppress his own. This is unquestionably decided, but when the suppression is for a wrongful purpose a taint is created, and a court of equity may look beyond the fictitious issue, in respect to protection of a paper patent which is locked up, and to the underlying and substantial issue, which involves the question whether equity will help a monopolistic exclusion of a beneficial right from public use, when the purpose is to force another and a different thing upon the public, under conditions which at once overturn the whole theory of government protection to patents intended to stimulate invention to the end that the benefits of discovery shall, under reasonable competitive patent conditions flow to the trades and industries.

Extreme illustrations may be used to test the reasonableness of a legal or an equitable proposition. If it is legal and equitable for individuals or corporations to buy and suppress one patent for the purpose of forcing another into trade and into control in a given industry, they may upon the same legal and equitable logic buy and suppress all, together with the public interest, and it is when the real and substantial purpose is not to safeguard a particular right, but to suppress it under the forms of law and to arbitrarily force another, that the equitable situation changes.

Under the Constitution and the statute in aid of the constitutional provision with reference to inventions and discoveries, it was intended to stimulate art and invention under competitive conditions by protecting the right to each inventor, or each owner, to make, use and vend, and if equity is to aid in stultifying this plain intent through affirmative relief by injunction, by protecting patent aggregations held in deliberate non-use for the purpose of excluding all patent benefits except such as the holder sees fit to bestow, it will help to overthrow the intended meritorious patent competition under normal conditions in trade, and will help to deny the intended benefits to the public.

In the case at bar the patent in suit is deliberately suppressed. There has been no attempt to put it into commercial use. It relates to the very important and far-reaching paper bag industry. The only machine ever made under the patent was one made at an expense of many thousand dollars for use as an exhibit in this litigation.

The learned Judge Putnam, in the Circuit Court, under the view expressed in his opinion, that in patent suits the court "stands not only for the parties, but, in a certain sense, for the public," and "the interests of the public," expressed grave doubt upon the question whether the case at bar was one for injunction, but apparently, partly because an accounting is asked for and partly in recognition of what seemed to him as a crystallization of the authorities in other circuits in favor of injunction relief under such circumstances, granted an injunction with hesitation and with the reservation that he saw no relief for the respondent in this direction, "unless in some way obtained from the Supreme Court."

Upon the very important question of non-use, and as to the pur-

pose of non-use, the learned judge forcibly stated his findings as follows:—

"The bill asks for both an injunction and an account; and, though no issue has been made as to jurisdiction in equity for the account, it is maintained that, under the circumstances, equity will not take jurisdiction for an injunction. We have stated that no machine for practical manufacturing purposes was ever constructed under the Liddell patent. The record also shows that the complainant, so to speak, locked up its patent. It has never attempted to make any practical use of it, either itself or through licenses, and, apparently, its proposed policy has been to avoid this. In this respect it has not the common excuse of a lack of means, as it is unquestioned that the complainant is a powerful and wealthy corporation. We have no doubt that the complainant stands in the common class of manufacturers who accumulate patents merely for the purpose of protecting their general industries and shutting out competitors."

Injunction applications are addressed to the discretion of the court, a discretion to be exercised under legal rules and upon
9 equitable principles, and the attitude of the party to the situation as disclosed in argument has a proper bearing upon the question whether the injunction arm should be exercised in his behalf.

Upon the question of non-use the appellant took this position upon its brief: "No machine was ever built under the Liddell patent, prior to the beginning of this suit; and no machine claimed to be an infringement of the Liddell patent has ever yet been built by anybody, except that the defendant's self-opening square paper bag machines were claimed in this suit to be such an infringement. When Mr. Stone gave his theoretical expert testimony upon the characteristics of the Liddell patent in January, 1903, no machine had ever existed anywhere which conformed to the mechanism described and delineated in that patent. That patent at that time was nearly seven years old, but it still remained what it had always been, a paper proposition, and nothing more." And in reply to the oral argument of the appellant upon the question of non-use, counsel for the appellee said, "We do not make these machines because we do not need them. We hold the patent to control."

The oral statement of counsel adds nothing to the findings of the Circuit Court upon that point except to emphasize the idea of the purpose of the holding. In support of his position counsel cited *Bement v. National Harrow Co.* (186 U. S. 70, 90). It is not understood that *Bement v. National Harrow Co.* at all supports such a position. That case was not one of non-use, and only involved legal rights, and the question whether certain contract provisions as to the character and terms of the use under certain patents created a condition prohibited by the Sherman Act. The Supreme Court in support of the right of control was manifestly dealing only with the question of legal right and in no sense with the question of equitable aid. Moreover, that court, in order to limit the effect of the authority to the particular situation before it, guardedly left open the ques-

tion of the legal effect of the contemplated aggregation of legal rights under the incomplete escrow agreement.

It cannot be seriously urged that the Supreme Court has passed upon the question of equitable injunction relief in a case like this. Indeed, Judge Grosscup in his forcible dissenting opinion in *Fuller v. Berger* (120 Fed. Rep. 274, 281,) which was a case of mis-
10 use, decided since *Bement v. National Harrow Co.*, says "The Supreme Court has not yet passed upon the question of non-use," and Judge Lowell in the majority opinion in the present case, as well as Judge Putnam in the Circuit Court, treats the question as one not covered by any authority of the Supreme Court.

Grant v. Raymond (6 Peters, 218,) was likewise a case at law, and in that case Chief Justice Marshall, in speaking of the legal right and the duty of the court to uphold the patent contract, carefully guarded his observation by the important qualification, "if this can be done, without transcending the intention of the statute, or countenancing acts which are fraudulent, or may prove mischievous." This all important qualification of the right of legal control appears in the paragraph quoted approvingly by the Supreme Court in *Bement v. National Harrow Co.* It would thus seem beyond question that the Supreme Court was far from holding that a court of equity should grant an injunction in aid of a scheme to shut out competitors through holding patents intentionally stifled in non-use.

Moreover in the case referred to, Marshall, in speaking of the constitutional purpose to promote the progress of science and useful arts, and of the exclusive right of authors and inventors to their writings and discoveries, and of "the sole and exclusive right and liberty of making, using and vending to others to be used," said: "It is the reward stipulated for the advantages derived by the public for the exertions of the individual, and is intended as a stimulus to those exertions." It is perfectly clear that the eminent jurist was only speaking of protection in the right to make and use, and in the right to vend to others to be used. That was the reward of which he was speaking, and he simply declared an exact legal and equitable truth. It is not conceivable that he had in mind the idea of augmenting such reward by equitable encouragement of a scheme to aid the rightful constitutional and statutory reward or monopoly through acquirement and suppression of other inventions and of competing patent improvements and devices for doing the same work.

In the same line, and in support of the idea that the Constitution and the statute contemplated an exercise of the right, is the observation of Judge Shipman in *Magic Ruffle Company v. Douglas*, 2 Fish. Pat. Cas., at page 333:—
11 "The public who thus through the law secure to the inventor the exclusive property in his invention for a limited period receive in return either new, more valuable, or cheaper production during the life of the patent."

And we find further support in the reasoning of Kent in *Livingston v. Van Ingen*, 9 Johns. (N. Y.) 507, 586, that the general idea of equitable protection of a legal statutory right is based upon

a supposition that protection attaches to the right when in actual possession and exercise, and the principle there expressed by Chancellor Kent was quoted approvingly by the Supreme Court in *Root v. Railway Company* (105 U. S. 189, 192).

Still further, Judge Lurton, in the *Heaton-Peninsular Button-Fastener* case (77 Fed. Rep. 288, 294), says: "That the grant is made upon the reasonable expectation that he will either put his patent to practical use, or permit others to avail themselves of it upon reasonable terms, is doubtless true." And in *New York Paper Bag Mach. & M. Co. v. Hollingsworth & W. Co.* (56 Fed. Rep. 224, 231), Judge Putnam doubts whether, under circumstances of unexplained non-user, the case is not one of mere legal right, where the party is left to remedies at law, if entitled to any relief at all.

The *Heaton-Peninsular Button-Fastener* case (77 Fed. Rep. 288), upon which reliance is placed by reason of its dicta, was not a case involving deliberate non-use of patent rights in aid of the statutory monopoly under other patents, nor did it involve the question of injunction under such circumstances, but was a case involving the validity of certain restrictions imposed upon the use of the patent machine. Still if the shoe machinery illustration used at page 295 carried to its logical conclusion would operate to give legal and equitable control in deliberate non-use of all patents relating to the shoe industry, to the end that such a holder might deal out to the public the product of a single patent, or even an unpatented article, thus denying the public all benefits of invention, I should be quite unable to agree to such a result as a thing possible under a jurisprudence, which from time immemorial has recognized the wisdom and necessity of competitive conditions in trade and manufacture, and has assumed upon grounds of public policy to protect the public right of fredom in business.

12 In the *Broadnax* case (4 Fed. Rep. 214) it was simply a question whether practical use was necessary to preserve a patent, and involved no consideration of the question as to the effect of deliberately holding in non-use to aid another patent, nor did the *Consolidated Roller Mill Company* case (39 Fed. Rep. 803) involve any question like the one here. In the *Campbell Printing Press and Manufacturing Company* case (49 Fed. Rep. 930) there was no pretense of a wrongful purpose, and the non-use was satisfactorily explained, and Judge Lacombe's criticism of Judge Blodgett's reasoning in *Hoe v. Knapp* (27 Fed. Rep. 204) has no force upon the question now under consideration, because in *Hoe v. Knapp* there was no pretense of a deliberate holding in non-use in aid of another right; and in the *Crown Cork and Seal Company* case (108 Fed. Rep. 845, 868) the patent was recently issued, and the delay in manufacturing was explained by litigation and other obligations removing implications unfavorable to the patentee by reason of the delay.

So it would seem that in none of these cases was the question of equitable injunction relief, under circumstances where the patent was held in non-use for the sole purpose of control in aid of another patent, either considered or decided.

The supposition would seem to be logical that, if a party may acquire and hold a single competing patent in deliberate and intentional non-use for the purpose of overthrowing competitive conditions, and may have equitable injunction to that end, he may acquire and suppress all competing inventions and have equitable aid; and it would seem not to have been authoritatively decided that individuals or corporations may acquire all useful inventions relating to a particular industry, or all inventions relating to a particular service in the field of a given industry, and force into business and manufacturing establishments, upon railroads, into government establishments, and the various industries of the country, a single appliance or a particular machine through an artificial necessity and demand created in its behalf through a monopoly of patent statutory and competing rights intentionally held in non-use for such a purpose, and that they may have the monopoly influenced in behalf of such a scheme through injunction relief in equity.

13 Carrying equitable protection to such a second monopoly, maintained in deliberate non-use in aid of the one intended, would stifle the constitutional purpose, and reverse the whole constitutional and statutory project, in which the primary and leading purpose was to benefit the public and business by giving to the patentee a safely-guarded single monopoly of the right to make, use and vend under his invention.

As said by Mr. Justice Brewer in *State of Missouri ex rel. B. & O. Telegraph Co. v. Bell Telephone Co.* (23 Fed. Rep. 539, 540), "There is no peculiar sanctity hovering over or attaching to the ownership of a patent. It is simply a property right, to be protected as such," and immunity from the lawful and proper exercise of patent rights cannot be claimed solely because of the incident of the patent (*Patterson v. Kentucky*, 97 U. S. 501; *Webber v. Virginia*, 103 U. S. 344). Therefore in the view most favorable to the holder of cumulated inventions, an aggregation of titles to patent rights, rights created by statute, is no more solemn or sacred than an aggregation of various individual legal rights under government land grants. In neither case is it the holding of the legal title in the aggregate alone that involves an inequity or a wrong, but it is the purpose to monopolize, and deny to the public, rights which the government and the law fairly intended that the public should enjoy that offends equity and makes a case in which the holder of the legal right should not be aided by an injunction, but left to his legal remedies. The application of such a principle to such a situation involves neither the enunciation of a new rule nor the expansion of equitable principles. It is only an application of an ancient, familiar and simple doctrine in equity.

There is a broad difference between ownership and monopoly of strictly private rights and ownership and monopoly of rights into which the public interest and the public rights enter, and as is often pointed out artificial rights created by statutory law are more subject to regulation and control by government and law through affirmative and negative relief in equity than the natural rights of the individual,—rights which inhere in the individual. Neither should be

violated, but both may be regulated when used for a wrongful purpose.

My contention involves no suggestion that cumulation of
14 titles, whether they are artificial or natural, is in itself wrongful. It only becomes wrongful when the purpose of the acquisition is wrongful. When the purpose is not to enjoy the right as such, but to force other rights and to create abnormal conditions in the world of business, then a court of equity should not follow the legal right with a view of aiding the purpose.

The case of *Edwards v. The Allouez Mining Co.* (38 Mich. 46), which involved private rights and a situation into which the element of public interest did not at all enter, fully sustains this position. In that case land was bought by an individual with a preconceived purpose to force a sale of it upon the defendant. He did not want it for a homestead or for business property, but for the money he could compel the defendant to pay for it by reason of a nuisance which he knew existed at the time of the purchase. Failing through negotiation to secure more than the right was worth, he asked equitable aid by way of injunction, and the very able and interesting opinion of Judge Cooley made the case turn by reason of the purpose against equitable relief, observing, among other things, "We cannot say in this case that complainant had no right to buy, but we can say, as we do, that when he comes demanding strict legal rights he shall have those, but no more. He is entitled to his rights under the rules of law, but he is entitled to nothing of grace." See also *Randolph v. Quidnick Co.*, 135 U. S. 457, 460; *Bassett v. Company*, 47 N. H. 426, 442.

Aside from legal abstract, the act of acquiring a valuable right, into which the public interest centers, not for use, but to destroy or withdraw from use, alone involves a certain measure of wrong, because, upon natural and fundamental grounds, it is in a sense wrong to buy and withhold a thing of public interest and benefit, and when the fundamental wrong, based upon legal abstract, is augmented by the purpose to create a situation in restraint of normal conditions which shall operate to force a use based upon another and different right into business and upon the community, the right to equitable relief in aid of the abstract right is forfeited.

The equitable wrong does not reside in holding the aggregated title as such for its value as title, but in the purpose to hold the aggregation over and in restraint of the public, not for the intrinsic value of the right itself, but for the purpose of adding value
15 and potency to a monopoly which is already held in respect to another right.

I am not unmindful of the generally recognized rule that equity follows the law and the legal right, but this only means that equity will follow the law and the legal right only when law and the legal right are not wrongfully, oppressively, or inequitably employed to accomplish wrongful and unconscionable results. Legal rights may be so aggregated with a wrongful purpose as to become a menace to trade and destructive to free competition in business, and it is then that equity will not follow and aid the legal right.

The expression is a familiar one in the books that a patent situation is one which involves a contract between the patentee and the public, but without regard to whether that is a strictly accurate statement of the nature of the contract, in view of the constitutional and statutory public purpose, the proposition that the public interest, in a sense, enters into such a situation cannot be successfully disputed, and, as already observed, at best, a party who rests his right upon a public statute and a situation into which the public interest enters, does not hold his right strengthened by a greater weight of sanctity than does a party who rests his title upon the natural private right to acquire and hold private property, a right into which the public interest does not enter.

The spirit of equity encourages the idea, and it is high time that a court of equity charged with the reasonable and responsible exercise of a powerful and salutary function in government should emphasize the idea, that business enterprise and single rights, without regard to the question whether a given right is patent or natural, corporate or individual, should be protected by injunction only in the opportunity to freely run the course upon inherent merit in the natural and ordinary channels of business, unrestrained and unobstructed by forces involved in unreasonable and inequitable aggregations of rights calculated to force upon the public artificial and arbitrarily controlling conditions; and that equity consequently will not through injunction aid forces involved in unreasonable cumulations, especially in respect of artificial rights intended to restrain and obstruct freedom in business, and to force a particular right or a particular thing beyond its merit, out of its channel, beyond
16 the status of statutory protection to which it is entitled, and into a field of protection created by a second monopoly of other artificial rights deliberately acquired and held in non-use for the purpose of forcing upon the public arbitrarily controlling and absolute conditions in business.

Let us see where the doctrine of absolutism of control contended for in respect to rights which affect the public would lead. Extreme illustrations, as already said, test the logic and safety of a rule. If the public and equity are wholly and irretrievably at the mercy of an arbitrary force of absolutism residing in abstract legal, individual or corporate ownership of cumulated artificial or statutory rights, acquired and held not for use but for purposes of monopoly and control, a particular patent appliance may be forced exclusively into use through a monopoly of improvements and useful discoveries involved in competing inventions held and controlled in non-use for such a purpose. And if the contention is sound, such a wrongful and secondary monopoly, existing as a negative and restraining force in the field of industrial art and of invention, contrary to the manifest purpose of the Constitution and of the Act of Congress encouraging invention and discovery, and conceived as something to operate as an arbitrary and potential aid to the intended statutory monopoly of the single right to make, use and vend under a particular patent, may have the help of the injunction arm of equity.

Such a situation would at once arrest development and progress in the industrial system, and offend the idea of useful jurisprudence.

Conditions like these, deliberately created for purposes of control in business, are based upon artificial, arbitrary and inequitable lines which invade and hamper the natural, fundamental and essential rights of a business community to have reasonable competitive freedom, not only in trade and commerce but in the field of industrial art as well. Such a situation involves an aggregation of artificial, or in other words statutory, rights for the sole purpose of forcing upon the business of the country a given product or a given device, and as such it becomes a business scheme altogether intolerable upon an equitable view and upon equitable principles; and thus it is something to which a court of equity should not give affirmative aid through injunction in the interest of an ulterior right in-
17 tended to be influenced and accentuated by such artificial aggregations at the expense of the general public and of necessary and reasonable competitive conditions in the open field of commerce and industry.

If it is otherwise, a party holding a single patent for a particular automatic air brake, in respect to which no one would question his right to equitable protection in making, using and vending the particular thing covered by the patent, but not satisfied with the scope of this statutorily intended monopoly, may entirely destroy and wholly overthrow wholesome competition between things in the field of invention and discovery through acquiring all patents for other devices, together with all patents for improvements intended to do the same service, and without regard to the merit of the appliance covered by his original patent,—without regard to hazard to life in its use in connection with the public passenger-carrying service,—may force his particular thing upon all railroads through an intended monopoly of *quasi*-public statutory rights held in harmful non-use, and may call upon a court of equity to help him do it.

In equity consequence of interference or non-interference by way of injunction is always something proper to be considered, and this is especially so with reference to situations into which general public interest at all enters. Refusing injunction in aid of forces involved in artificial situations voluntarily and intentionally created to arrest development and suppress competitive conditions in a given industry, —situations based upon the conceived idea of having something in its nature calculated to influence normal conditions of demand and trade, and to augment the necessity and demand for a particular *quasi*-public right in use through a monopoly of competing *quasi*-public rights held in deliberate non-use for that purpose,—will not be harmful but helpful to general business and the general industrial pursuits. It would only be harmful to those whose purpose it is to harm business and the industrial pursuits by inequitably subjecting such interests to the injustice of non-competitive and monopolistic conditions, and the harm to those creating non-competitive conditions in the field of useful invention and discovery through an intentional withholding of public benefits for a wrongful purpose, only results from leaving them to stand upon their legal rights unaided by equity.

The very conception of such a holding involves the idea that a party, not satisfied with the enjoyment of the statutory mo-
18 nopoly of the invention covered by a particular patent grant, and notwithstanding the important and controlling consideration, at least so far as equity is concerned, that neither the Constitution nor the statute ever intended anything more as a part of the statutory contract, or contemplated any further safeguard to the patentee as a thing possible, may aid the statutory monopoly by another and a secondary monopoly of competing patent rights held in deliberate and intentional non-use, and may ask equity through injunction to assist in furtherance of such a purpose.

Under such circumstances equity is not asked to protect the patent monopoly intended by the statute, but the broader monopoly which in conception and extent offends the statute and the conscience of equity as well. This is so because the ulterior and substantial purpose is not to protect the infringed patent that is locked up, but to force the public and the trade to use another patent. Thus is presented an inequitable situation which a court of equity should at least leave where it finds it.

Against the idea that the holder of the legal right should be left to legal remedies, the suggestion is made that legal remedy in a patent case would involve a multiplicity of suits; and should a holder of the legal right be subjected to such inconvenience? The answer is yes, if the legal right is held in non-use for a wrongful ulterior purpose in respect to another right, and to the end that that particular right shall have the exclusive field, and remain as the only invention available to the public. It must always be borne in mind that the relief sought is not that the patent in use, as a rightful monopoly, shall not be infringed, but that other patents may be held in non-use under equitable protection so that the new discoveries which they cover shall not come into competition with the discovery in use. Under such conditions the appeal to equity is groundless. Reasonable protection of the rightful monopoly in use does not require equity to hold other discoveries in non-use, to the end that the particular invention in use shall be the only one available to the public. It is no sufficient answer to say that, as the statute intends a monopoly, the situation is *sui generis*, because it is not the rightful *sui generis* statutory monopoly in use that is equitably objectionable, but the statutory monopoly in suit, held in de-
19 liberate non-use in aid of it, that is equitably objectionable.

While the legal statutory monopoly of the invention covered by the paper patent in suit is in and of itself rightful, when such rightful statutory monopoly is not to be exercised, but held over the public, entrenched in deliberate non-use for an ulterior purpose with respect to another right, such rightful monopoly becomes harmful, and, as such, an inequitable one.

To thus force business through acquirement and non-use of titles, based upon a public statute intended to promote invention and protect use, is quite as inequitable and harmful as is influence of trade through deceptive trade-marks, which equity will not aid.

Trade-mark rights are legal property, and, under a general rule,

protected by equity. But when it is found that the underlying purpose is to wrong the public under the guise of a trade-mark, equity rightfully withholds support; and the books are full of analogous situations where both law and equity have refused to follow the exercise of the legal right into the field of wrong and oppression to business and communities. This is upon the idea that neither the law nor equity follows the legal right in order that it shall be established and maintained where the purpose is to fix a harmful use or control upon business or upon the public. High on Injunctions, §1092-5; *California Fig Syrup Company v. Putnam*, 66 Fed. Rep. 750; S. C., 69 Fed. Rep. 740; *Manhattan Medicine Company v. Wood*, 108 U. S. 218, 223; *Church v. Proctor*, 66 Fed. Rep. 240; *Connell v. Reed*, 128 Mass. 477; 2 Austin on Jurisprudence, 3d Eng. Ed., 668; Phelps's Jurid. Eq., Abridged, § 239; 1 Pomeroy's Equity Juris., 1st ed., § 427; *Leather Cloth Company v. American Leather Cloth Company*, 4 De Gex, J. & S. 137, 142, 144; S. C., 11 H. L. Cas. 523. In the last case cited, Lord Westbury, in turning the case upon the wrongful purpose in connection with the property which the plaintiff sought to protect, says: "He loses, and very justly, his right to claim the assistance of a court of equity;" and in *Church v. Proctor* (66 Fed. Rep. 240, 245), we held at law, and upon legal principles, that the legal right of contract would not be upheld for the benefit of a wrongdoer in respect to a business enterprise which contemplated imposition upon the general public.

I again state, for purposes of illustration, the proposition
20 that legal, artificial patent rights, based upon statute law giving monopoly and control for a limited time, have no greater sanctity as rights than natural legal rights in the hands of an individual, which he may monopolize and control without limit as to time. Both hold good as legal rights and may be controlled by the owner, but courts of equity should not as to either class aid the owner in a purpose to acquire and so use his legal rights as to unreasonably control trade.

Perhaps a man may legally acquire and destroy a product, which, under natural conditions, would create trade and be consumed by the public; but will courts of equity aid? Such an equitable question of injunction cannot be determined upon the principle of technical, abstract, legal right, because if it were to be determined upon the single idea of absolute, legal right, one might at his own absolute will dominate and dismantle competing business establishments.

Aside from patent-right conditions (conditions at best not involving rights superior to ordinary property rights), suppose a scheme to hold and dominate prices in the fruit market through regular arrivals in a given harbor of stated cargoes of fruit, and suppose by reason of stress of weather the arrival of vessels had been delayed or accelerated, and that two vessels arrive when only one was expected, and suppose that the owners, to the end that the market should not be over-stocked and prices fluctuated, should deliberately dump one of the cargoes;—under such circumstances it would not be supposed that anyone would contend that the act in

itself was not in a sense wrong; still, such an act could perhaps be defended upon the ground of legal, abstract right of ownership and control. But whether equity, as an instrument of government for the reasonable protection of legal rights, would aid in a consummation of the scheme through the arm of injunction by restraining interference with the dump is quite another question.

Again, it is well understood in the wood-pulp industry that at least eighty per cent. of spruce fibre is required in order to get commercial fibre pulp for the manufacture of paper, and suppose either a natural person, or a corporation, or a combination of corporations, with a purpose to wholly overturn the general economic conditions in the wood-pulp and paper industry, should buy the entire spruce product of the country, which of course is a thing quite pos-
21 sible, and of course something which might be legally done, and suppose it should be held with notice that it would be neither used nor sold, the avowed purpose being to force upon the public and into the newspaper business an artificial patent product which would bring greater profits in return. If such a condition is dominant and absolute and may have the aid of equity as a controlling force, the owner of the legal title may not only withhold the natural spruce product, but he may, if he so wills, hold in non-use the patent product, his attitude thus operating to withdraw newspapers, magazines and wrapping-paper from the public, or in the event of use of his patent product under his absolute right, he may dominate the additional expense which the public shall pay for the patent product which his control has forced into the newspaper, magazine and wrapping-paper industries. Such a perverse, oppressive and revolutionary exercise of a naked and abstract legal right might not operate to forfeit the right to hold the legal title, but upon equitable principles it would operate to forfeit the right to have equitable relief or equitable aid by way of injunction. The person so holding and exercising the legal right might perhaps recover damages in an action at law from individuals who invade the legal right. The damages, however, would probably have reference to the value of the spruce rather than to the loss of profits in respect to the product wrongfully intended to be forced upon the public.

The suggestion of Judge Lurton in the Heaton case that security to the public resides in the supposition that business instincts and business interests will induce the patentee to use the most beneficial right is no sufficient answer to such an idea of absolutism. That school of legal and equitable philosophy would still leave the holder of the cumulated patents in non-use in the domain of control, because he alone may absolutely will which product is most beneficial, and which the public and business shall have, and upon what terms, and this would be at the expense of intended competitive conditions in trade.

It is for such reasons and upon such considerations that equity should at least leave parties to stand upon their legal rights without the aid of injunction, when it is their purpose to acquire legal
22 titles for control in the direction of forcing conditions which offend the spirit of the law, public policy and the conscience of equity.

Again, to illustrate that equity does not always follow the legal right, a member of the public has a legal right to use a public highway, but a court of equity would not enter the field for the purpose of aiding him in such an exercise of the right as amounts to a public nuisance, or in such an exercise of the legal right of travel as to wholly reverse the policy of the law in respect to the general public, whose rights have reference to the purpose of the law which instituted the highway situation and to which the relative rights relate.

An injunction in aid of a legal right does not follow as a strict legal right, nor does it follow as of course. The question whether an injunction should go in a given case relates quite as much to the purpose in respect to the use of the right as the right itself. The purpose for which the right is to be exercised may be quite decisive of the question whether a court of equity will aid by injunction.

An individual or a corporation who holds a naked, legal, statutory right, and who sustains a wrongful attitude to public policy and to the law upon which the right is founded, has no vested right to have an equitable injunction in his aid, because the attitude is one which offends public policy, and ignores the intention of the statute law upon which the supposed right is founded.

Courts of equity are neither bound by principles of equity nor justice in the exercise of discretion to help a situation in purpose wrongful. They may safely leave such a situation to be solved upon lines of legal right. Every right created by law and every natural right may be so inequitably used as to forfeit the claim upon equity to have the right aided by injunction. It is an ancient and familiar principle of equity that one who asks the aid of equity should accord equity. That principle is quite decisive of the question here. Under such a principle, injunction should not aid a situation which involves inequity, and especially where the situation involves an inequity which results from a purpose and use which contravene the spirit of the Constitution,—a purpose and use which offends public policy and overthrow the intention of the statute law upon which the supposed right is founded, and in respect of which the equitable injunction relief is sought. Under such circumstances, the discretionary right to ask for equitable injunction aid is forfeited upon the ground that equity will not aid the wrongful or oppressive exercise of the legal right, but will leave it where equity finds it.

23

A court of equity by means of injunction should no more aid an individual or a corporation in a purpose to control industries through a monopoly of patent rights held in intentional and deliberate nonuse than it should aid a person or a corporation in a purpose through strictly legal titles or government grants, not involving invention, to control and monopolize the coal industry, or any other industry, where the purpose is to control a situation which affects the rights and interests of the general public.

Many jurists hold the view that the Sherman Act, conferring upon the Federal Courts jurisdiction over matters of trust, etc., and the subsequent acts extending and emphasizing its provisions, are merely

declaratory of efficient and potential principles of common law and doctrines of equity governing courts of general jurisdiction.

Without regard, however, to the question whether this is strictly so or not, and without regard to the question whether an aggregation of patent rights for the purpose of locking them up and denying to the public the constitutionally and statutorily intended benefits of invention, all to the end that a single invention or discovery shall be forced upon the public by withholding all others is something within the recent provisions of the Acts of Congress intended to protect the public against monopoly, it, at least, is something which presents a situation as lacking in equity, so far as injunction is concerned, as are situations where unfair and inequitable control is secured through aggregations prohibited by the Acts of Congress, to which reference has been made.

To re-state the position: The statute protects the right to make, use and vend. There was never any idea of equitable injunction protection of patent rights in the hands of individuals or corporations in the stifled condition of non-use, with a purpose and a result which retard business prosperity and benefits, which, under natural competitive conditions, would come to trade and industry,—a purpose and a result at once harmful to the general public interests, and without denying the individual or corporate abstract right to ac-
24 quire and hold the legal title to any number of patents, once admitting that equitable protection should be given to a single competing patent purposely acquired and held in deliberate non-use to stifle patent competition, the legal and equitable logic, involved in the proposition, carries injunction protection to a complete monopoly of all useful invention and discoveries held in non-use, if so willed by the owner, a condition of things, in an equitable sense, at once intolerable.

Under a contract which gives patentees a monopoly of the thing invented, but more properly under a public statute, into which the public interests enter, which protects in the exclusive right to make, use and vend, a court of equity is asked to help suppress all invention, which upon merit fairly enters into competition with the statutory monopoly which they hold. Such would be a monopoly beyond the statutorily intended monopoly, and one which would offend the laws of business and every principle of natural justice, and the proposition of equitable aid through injunction is indefensible.

Reasonable considerations of wise public policy, and of principles governing equitable jurisprudence, require that equitable aid, through the discretionary arm of injunction, should be withheld from one who attempts to unreasonably and inequitably oppress the general public, and to so use a naked legal right, which inhers in a situation involving a government purpose, and into which the public right in a sense enters, as to offend and wholly reverse the plain spirit and policy of the fundamental law upon which the right is founded.

Justification of non-injunction intervention, under such circumstances, invokes no novel doctrine. Non-interference under such conditions is based upon fundamental and substantial grounds of justice and equity. Artificial statutory rights, existing in deliberate

non-use for purposes of control and to dominate business, with the legal right aided by equitable injunction, would at once become a thing altogether intolerable and indefensible.

If this is not a case of merit for injunction, equitable jurisdiction will not be held for purposes of an accounting. Such relief in patent cases is ordinarily incidental to some other equity. *Root v. Railway Company*, 105 U. S. 189; *Germain v. Wilgus*, 67 Fed. Rep. 597, 600.

25 United States Circuit Court of Appeals for the First Circuit.

No. 635.

CONTINENTAL PAPER BAG COMPANY, Defendant, Appellant,
v.
EASTERN PAPER BAG COMPANY, Complainant, Appellee.

Final Decree in Circuit Court of Appeals.

December 24, 1906.

This cause came on to be heard on April 17 and 18, 1906, upon the transcript of the record of the Circuit Court of the United States for the District of Maine, and was argued by counsel.

On consideration whereof, It is now, to wit, December 24, 1906, here ordered, adjudged and decreed as follows: The decree of the Circuit Court is affirmed, and the appellee recovers costs of appeal.

By the Court,

JOHN G. STETSON, *Clerk.*

Clerk's Certificate.

I, John G. Stetson, Clerk of the United States Circuit Court of Appeals for the First Circuit, certify that the printed pages, numbered 1 to 25, inclusive, hereto prefixed, contain and are a true copy of all proceedings in said cause after the filing of the transcript of the record of the Circuit Court of the United States for the District of Maine on February 1, 1906, to and including January 4, 1907.

In testimony whereof, I hereunto set my hand and affix the seal of said United States Circuit Court of Appeals for the First Circuit, at Boston, in said First Circuit, this fourth day of January, A. D. 1907.

[Seal United States Circuit Court of Appeals, First Circuit.]

JOHN G. STETSON, *Clerk.*

26 UNITED STATES OF AMERICA, *ss:*

[Seal of the Supreme Court of the United States.]

The President of the United States of America to the Honorable the Judges of the United States Circuit Court of Appeals for the First Circuit, Greeting:

Being informed that there is now pending before you a suit in which Continental Paper Bag Company is appellant, and Eastern Paper Bag Company is appellee, which suit was removed into the said Circuit Court of Appeals by virtue of an appeal from the Circuit Court of the United States for the —— District of Maine, and we, being willing for certain reasons that the said cause and the record and proceedings therein should be certified by the said Circuit Court of Appeals and removed into the Supreme Court of the United
27 States, do hereby command you that you send without delay to the said Supreme Court, as aforesaid, the record and proceedings in said cause, so that the said Supreme Court may act thereon as of right and according to law ought to be done.

Witness the Honorable Melville W. Fuller, Chief Justice of the United States, the 13th day of March, in the year of our Lord one thousand nine hundred and seven.

JAMES H. McKENNEY,
Clerk of the Supreme Court of the United States.

Return on Writ of Certiorari.

United States Circuit Court of Appeals for the First Circuit.

And now here the Judges of the United States Circuit Court of Appeals for the First Circuit make return of this writ by annexing hereto and sending herewith a stipulation between counsel for the respective parties in the cause in the Supreme Court of the United States wherein this writ of certiorari issued, "that the Transcript of the Record in said case, which is on file in the Supreme Court of the United States, as an exhibit to the petition for a writ of certiorari which was filed January 16, 1907, in the Supreme Court, by the Continental Paper Bag Company, can be taken in the Supreme Court as a return to the writ of certiorari which was issued out of and under the seal of the Supreme Court on March 13, 1907."

In testimony whereof, I John G. Stetson, Clerk of said United States Circuit Court of Appeals for the First Circuit, hereto set my hand and affix the seal of said court at Boston, in said First Circuit, this twenty-eighth day of March, 1907.

[Seal United States Circuit Court of Appeals, First Circuit.]

JOHN G. STETSON, *Clerk.*

28 United States Circuit Court of Appeals for the First Circuit.

CONTINENTAL PAPER BAG COMPANY, Appellant,
vs.
EASTERN PAPER BAG COMPANY, Appellee.

Stipulation.

[Filed in Circuit Court of Appeals March 22, 1907.]

It is hereby stipulated by and between the parties to the above entitled cause, that the Transcript of the Record in said case, which is on file in the Supreme Court of the United States, as an exhibit to the petition for a writ of certiorari which was filed January 16, 1907, in the Supreme Court, by the Continental Paper Bag Company, (being the seven volumes of the record in the United States Circuit Court of Appeals for the First Circuit, and Volume VIII, comprising the proceedings in the said United States Circuit Court of Appeals,) can be taken in the Supreme Court as a return to the writ of certiorari which was issued out of and under the seal of the Supreme Court on March 13, 1907.

Signed by counsel for both parties to this cause this twentieth day of March, nineteen hundred and seven.

ALBERT H. WALKER,
Counsel for the Continental Paper Bag Co., Appellant.
BETTS, SHEFFIELD & BETTS,
Counsel for the Eastern Paper Bag Co., Appellee.

29 [Endorsed:] File No. 20,533. Supreme Court of the United States. No. 202, October Term, 1907. Continental Paper Bag Company *vs.* Eastern Paper Bag Company. Writ of Certiorari, and Return of United States Circuit Court of Appeals for the First Circuit thereon. Filed March 30, 1907.

UNITED STATES CIRCUIT COURT,

FOR THE DISTRICT OF MAINE.

EASTERN PAPER BAG COMPANY

VS.

CONTINENTAL PAPER BAG COMPANY

DEFENDANT'S RECORD.

VOLUME 2.

ALBERT H. WALKER,
ATTORNEY.

INDEX TO VOLUME 2.

PATENTS.	INVENTORS.	PAGES.
222,464	Cross	5
240,972	Cross	23
242,661	Leinbach, Wolle & Brunner	35
327,280	Leinbach, Wolle & Brunner	55
331,722	Lorenz & Honiss	79
333,647	Lorenz & Honiss	101
337,965	Lorenz & Honiss	115
337,966	Lorenz & Honiss	127
361,951	Lorenz & Honiss	159
387,573	Appel	185
407,794	Stilwell	231
410,841	Lorenz & Claussen	257
410,842	Lorenz & Honiss	269
411,544	Claussen & Mortson	285
417,346	Stilwell	305
439,703	Taylor	325
439,843	Kelliher	343
446,839	Patterson	357
510,410	Crowell	369
534,512	Lorenz & Claussen	385
540,556	Murchie	403
542,447	Pettee	439
543,571	Crist	463
558,969	Liddell	473
598,497	Claussen	493
635,090	Claussen & Mortson	517

2 Sheets—Sheet 1.

W. C. CROSS.

Paper-Bag Machine.

No. 222,464. Patented Dec. 9, 1879.

Fig. 1.

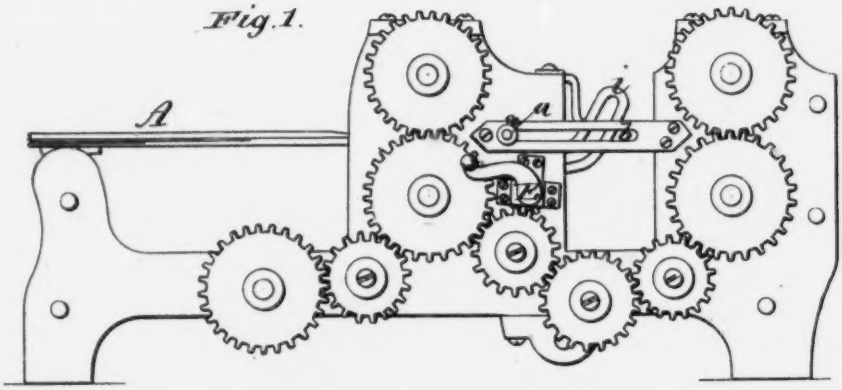

Fig. 2.

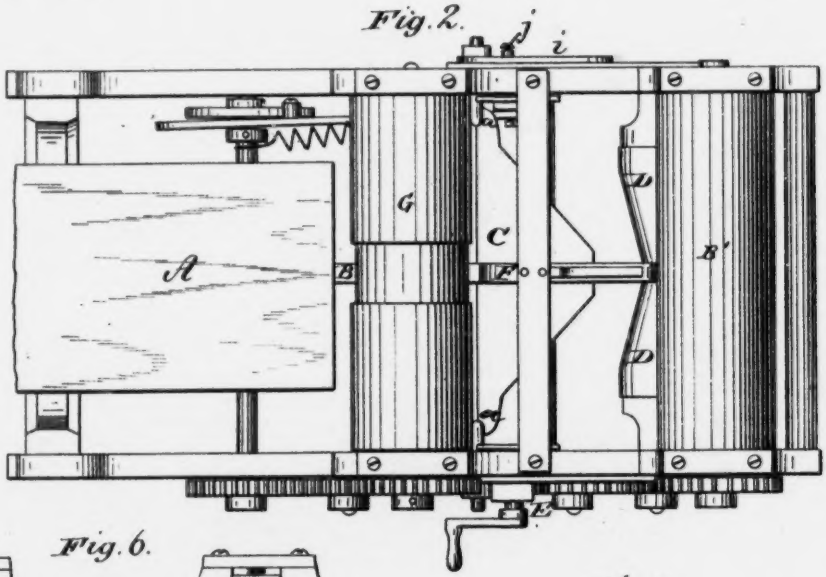

Fig. 6.

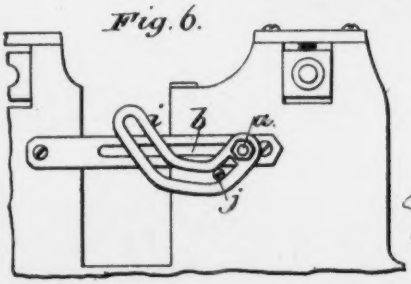

Fig. 7.

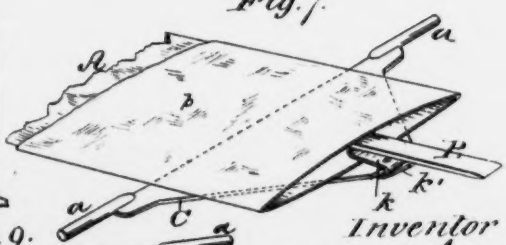

Fig. 9.

Witnesses:

E. E. Masson

Geo. H. Graves

Inventor

William C. Cross

by Munn & Bailey

his attys.

2 Sheets—Sheet 2.

W. C. CROSS.

Paper-Bag Machine.

No. 222,464. Patented Dec. 9, 1879.

Fig 3.

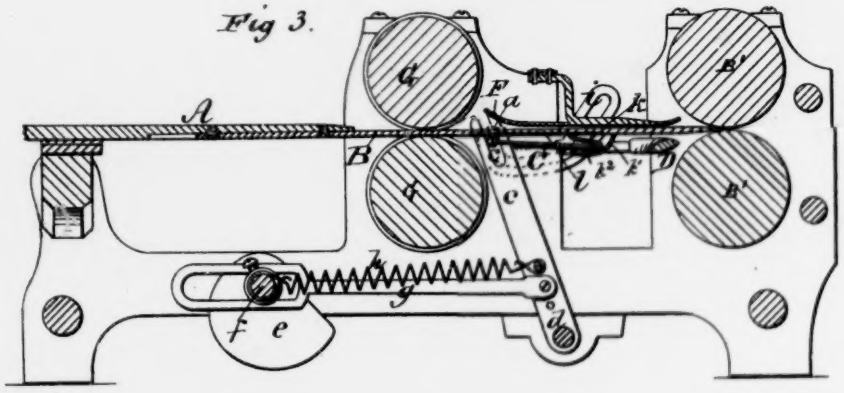

Fig. 4.

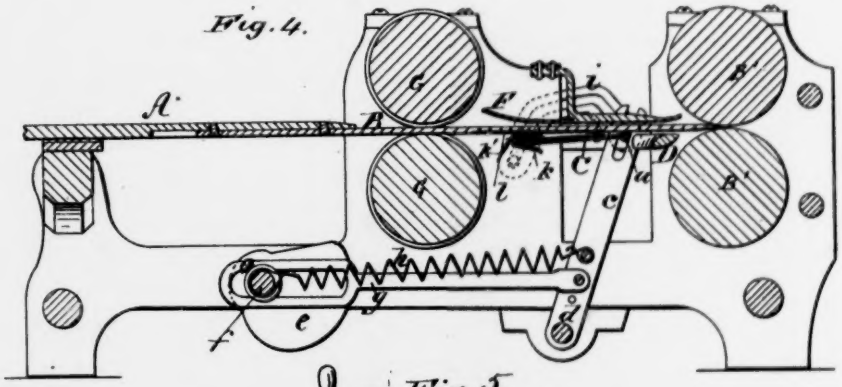

Fig. 5.

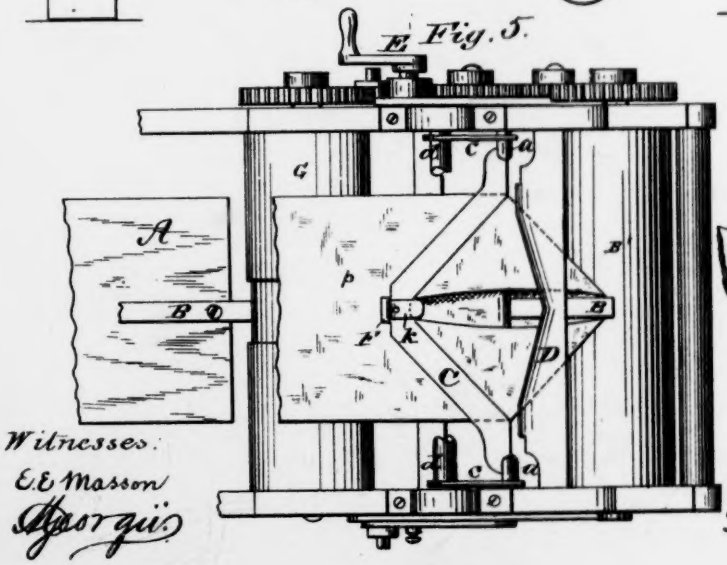

Fig. 8.

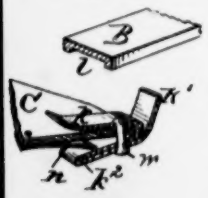

Witnesses:
E. E. Masson
Geo. Gill

Inventor:
William C. Cross
by M. Bailey
his atty.

UNITED STATES PATENT OFFICE.

WILLIAM C. CROSS, OF BOSTON, MASSACHUSETTS.

IMPROVEMENT IN PAPER-BAG MACHINES.

Specification forming part of Letters Patent No. **222,461**, dated December 9, 1879; application filed November 1, 1879.

To all whom it may concern:

Be it known that I, WILLIAM C. CROSS, of Boston, Massachusetts, have invented certain new and useful Improvements in Machinery for Making Satchel-Bottom Paper Bags, of which the following is a specification.

My invention relates particularly to that portion of the satchel-bottom-bag-making machinery by which the first or diamond fold is formed.

I combine with feed mechanism and a guide rod or bar, around which the flattened tubular paper blank passes, a clamp, nipper, finger, or its equivalent, attached to and moving with a reciprocating and vibrating carrier or holder, between which and said clamp, or its equivalent, one of the plies of the advancing tubular blank enters. The said carrier has a forward movement in unison with the forward feed movement of the blank so long as the latter is engaged by the clamp or its equivalent. It also has simultaneously a vibratory movement on an axis, by which it causes the clamp which it carries to turn down and fold back flat the clamped or engaged ply of the blank, the line of fold being accurately determined by the rear edge of the carrier, which acts as a guide. It is in this combination of parts that my invention principally resides.

To enable others skilled in the art to understand and use my said invention, I shall proceed to explain the manner in which the same is or may be carried into effect, by reference to the accompanying drawings, in which—

Figure 1 is a side elevation of so much of a machine as needed in order to illustrate my invention. Fig. 2 is a plan of the same. Figs. 3 and 4 are longitudinal vertical central sections of the same, representing the folding mechanism in two different positions. Fig. 5 is a bottom view of the machine with the lower delivery-roll removed in order that the position of the blank at the time the diamond fold is completed may be more clearly seen. Fig. 6 is a view on an enlarged scale of the cam-arm and parts immediately adjacent thereto, by which the carrier or holder is vibrated. Fig. 7 is a perspective view of the blank and carrier and clamp or jaw, representing the parts in the position which they occupy when the forward end of one of the plies of the blank is entering between the clamp and the holder. Fig. 8 represents detached sectional views, on an enlarged scale, of the guide-bar and the clamping-jaw. Fig. 9 is a view of a modified form of clamp or holding jaw or finger.

The working parts of the machine are supported in suitable frame-work, as shown.

The stationary trunk or former A is of ordinary or suitable construction. Around it passes the tubular blank, which is made or formed up from a paper strip fed from a roll of paper, in the usual way, with its lapped edges pasted together. I have not deemed it necessary to show the tube forming and pasting mechanisms, inasmuch as they are well known and form no part of my invention.

In front of the trunk or former is a central horizontal guide rod or bar, B, which is fixed to, and forms a prolongation of, the trunk, said bar preferably extending forward as far as the delivery-rolls B′.

In front of the trunk are feed-rolls G, between which the guide-bar passes.

Between the feed and delivery rolls is the reciprocating and vibrating holder or carrier C, which is a plate or frame of suitable form, provided with a straight transverse rear edge, and provided at its ends with journals *a*, which move in horizontal slots or guideways *b* in the frame of the machine. It is caused to move back and forth in said slots by suitable means, consisting in this instance of forked arms *c*, which are fast to, and extend from, a rock-shaft, *d*, and at their upper ends straddle the journals of the carrier-plate.

The rock-shaft is caused to move at proper times and to the proper extent by a rotating cam, *e*, fixed on a shaft, *f*, and acting with its periphery on a stud or roller projecting from the connecting-rod *g*, which is jointed, as shown, to one of the radial arms *c*. A spring, *h*, tends to hold the connecting-rod *g* in contact with the cam.

Simultaneously with its reciprocating movement the carrier is caused to vibrate by means of a cam slotted arm, *i*, attached to one of its ends or journals, and engaging a pin or stud, *j*, fixed to the machine-frame, as shown in Fig. 6. The arrangement of parts is such that

DARK PAGE BLEED THRU

when the carrier moves forward it will swing down and back, and when it recedes it will swing up into its first position.

On the upper face of the carrier or holder, at or near its front end, and at a point immediately beneath the central guide bar or rod, is a nipper or clamping-jaw, *k*.

It is intended that the front end of the under ply of the blank, which moves forward on the guide-rod, shall enter between this clamping finger or jaw or nipper and the carrier or holder. To insure this I form in the under side of the guide-bar a longitudinal recess, *l*, into which the free end of the jaw enters when the carrier is in position to take hold of the blank, thus permitting this end of the jaw to rise above the under face of the guide-bar.

The clamping-jaw shown in Figs. 3, 4, 7, 8 is the one which I on the whole prefer. It is in reality a vibratory three-armed lever pivoted at *m* to the carrier, so that the clamp may move to and from the adjoining face of the carrier. The one arm *k* is the clamp proper. The other two arms, k' k^2, are stops or projections, one of which, when the carrier has swung to either one of its extreme positions, abuts against the guide-bar, and so serves to lift the clamp away from the carrier, against which said jaw is at other times held by a spring, *n*.

Above the guide-bar is a smoothing strip or tongue, F, fixed to the machine-frame, between which tongue and the guide-bar the upper ply of the tubular blank passes. This device is provided in order to prevent the upper ply from possibly wrinkling or puckering at that point while the diamond fold is being made.

In front of the carrier or holder plate are inclined guide-plates D, which serve to direct the diamond-folded front end of the blank into the delivery-rolls, and to prevent said end from wrinkling or crumpling.

The operation of the parts is as follows, supposing the blank to be properly entered between the feed-rolls, the feed-rolls and delivery-rolls moving at the same surface speed, and all the parts being properly geared to the driving or first-motion shaft E, as indicated in Fig. 1: When the machine starts the tubular blank *p*, Figs. 5 and 7, passes forward from the trunk or former between the feed-rolls and around the central guide-bar until the front end of its under ply enters between the clamping-jaw and the carrier or holder, as indicated in Fig. 7, the clamp *k* being, for this purpose, held open by the arm k', as indicated in Fig. 3. The devices for giving horizontal reciprocatory movement to the carrier are so timed that the carrier begins to move forward when the under ply has entered the proper distance between the clamp and the carrier. As soon as the carrier moves forward it at the same time begins to swing downward by reason of the slotted cam-arm *i* and the stud *j*. This movement removes the projection or arm k' from contact with the guide-bar, and so permits the spring *n* to close the clamp upon the under ply, which is thus securely held. The carrier moves bodily forward in unison with the blank. At the same time it swings down and back, so that by the time the extreme forward point of reciprocation has been reached it has swung back to the extent of about a half-circle, as shown in Fig. 4, carrying back with it the under ply held by the clamp, as indicated in Fig. 5, the said ply being folded back across the rear edge of the carrier, which serves to determine the line of fold, while the upper ply, forming the front end of the diamond fold, is upheld and guided to and between the delivery-rolls by the guide rod or bar. When the carrier arrives at the position represented in Fig. 4 the stop or projecting arm k^2, which is now uppermost, presses against the guide-bar with the effect of tilting the clamp proper away from the carrier, thus releasing the under ply now forming the rear flap of the diamond fold. The blank freed from the clamp is carried forward, diamond fold down, by the delivery-rolls, between which it passes, and from which it is discharged, the inclined guide-plates D keeping the diamond fold smooth and causing it to pass without puckers or wrinkles to the delivery-rolls. As soon as the rear flap of the diamond fold has passed forward the proper distance out from between the clamp and the carrier the latter retires and resumes its first position, (indicated in Fig. 3,) in readiness to again act.

In case of using a blank having the form of a continuous tube fed continuously forward, which I prefer and shall in practice use, I can employ any suitable device for severing from the tube a blank of the length required for the bag. The cutters for this purpose may be arranged in the feed-rolls, a small supplemental cutter being used to sever the central portion of the blank, opposite the guide-bar, in case that portion could not conveniently be severed by the main cutters; or I can employ cutting devices independent of the feed-rolls, as will be understood without further explanation.

I have not here shown means for completing the satchel-bottom by folding over the end flaps of the diamond. Any suitable mechanism can be used for the purpose, to which mechanism the diamond-folded blank can be conveyed by suitable instrumentalities from the delivery-rolls; or said delivery-rolls may form a portion of the said completing mechanism—such a mechanism, for instance, as I have shown and described in my application for Letters Patent filed in the United States Patent Office on or about September 29, 1879, on which application Letters Patent are about to issue to me, which will bear the date of November 11, 1879.

I have described the form of clamp or retaining jaw or finger which I, on the whole, prefer. The same, however, may be varied in many respects without departure from my invention—as, for instance, I can use a retaining jaw or finger, such as shown at k^2 in Fig.

9, the said jaw being a simple strip of metal without any proper motion of its own.

I remark, also, that I may make the jaw or clamp adjustable longitudinally by mounting it on a plate adapted to slide on the carrier plate or frame, with a view to adapting it to take bags of different lengths, and to make a larger or smaller fold, as required. I would retain the same rate of feed movement in all cases, so as to use the same quantity of paper, whether making larger or smaller bags. The smaller the bags the more of them would be made during the same period of time and with the same quantity of paper. All that would be needed would be to change the speed of the movement of the carrier, and to time it properly in its movement. It might also be desirable to bring the delivery-rolls nearer the feed-rolls for smaller bags, and they could be made adjustable for the purpose. These changes may readily be made by properly changing the gears which transmit movement.

It is manifest that the combined reciprocating and vibrating movement of the carrier can be obtained in other ways, and by means of mechanical devices other than those shown in illustration of my invention.

Having described my invention, what I claim, and desire to secure by Letters Patent, is—

1. The combination, with feed mechanism and the guide bar or rod, of a reciprocating and vibrating carrier or holder, means for actuating the same to move substantially as described, and a clamp or retaining jaw on said carrier, between which and the carrier passes and is retained that ply of the blank which is to be folded back to make the diamond fold, the combination being and acting substantially as hereinbefore set forth.

2. The reciprocating and vibrating carrier, and means for actuating the same to move substantially as described, in combination with the clamp or retaining jaw mounted on said carrier, and the guide bar or rod provided with a recess, in which the free end of the clamp is received, substantially as and for the purposes set forth.

3. The combination, substantially as hereinbefore set forth, of the reciprocating and vibrating carrier or holder, the clamping or retaining jaw on the same, the guide bar or rod, the feed mechanism, and the delivery-rolls.

4. In combination with the reciprocatory and vibratory carrier and the guide rod or bar, the spring-closed clamping or retaining jaw hinged or pivoted to said carrier, and the stops or projecting arms which operate to open said jaw at either extreme of the vibratory movement of the carrier, substantially as set forth.

5. In machinery for making the first or diamond fold of a satchel-bottom paper bag, a reciprocating and vibrating carrier-plate external to the blank, provided at its front with a nipper or jaw to grasp that ply of the blank next to it, and at its rear with a transverse guide or folding edge, over which said ply is folded by the vibratory movement of said plate, while the latter and the blank move forward together, substantially as hereinbefore set forth.

In testimony whereof I have hereunto set my hand this 31st day of October, A. D. 1879.

WILLIAM C. CROSS.

Witnesses:
THOMAS SAVAGE,
ADDISON J. SEAWARD.

(No Model.) 7 Sheets—Sheet 1.

W. C. CROSS.

Paper Bag Machine.

No. 240,972. Patented May 3, 1881.

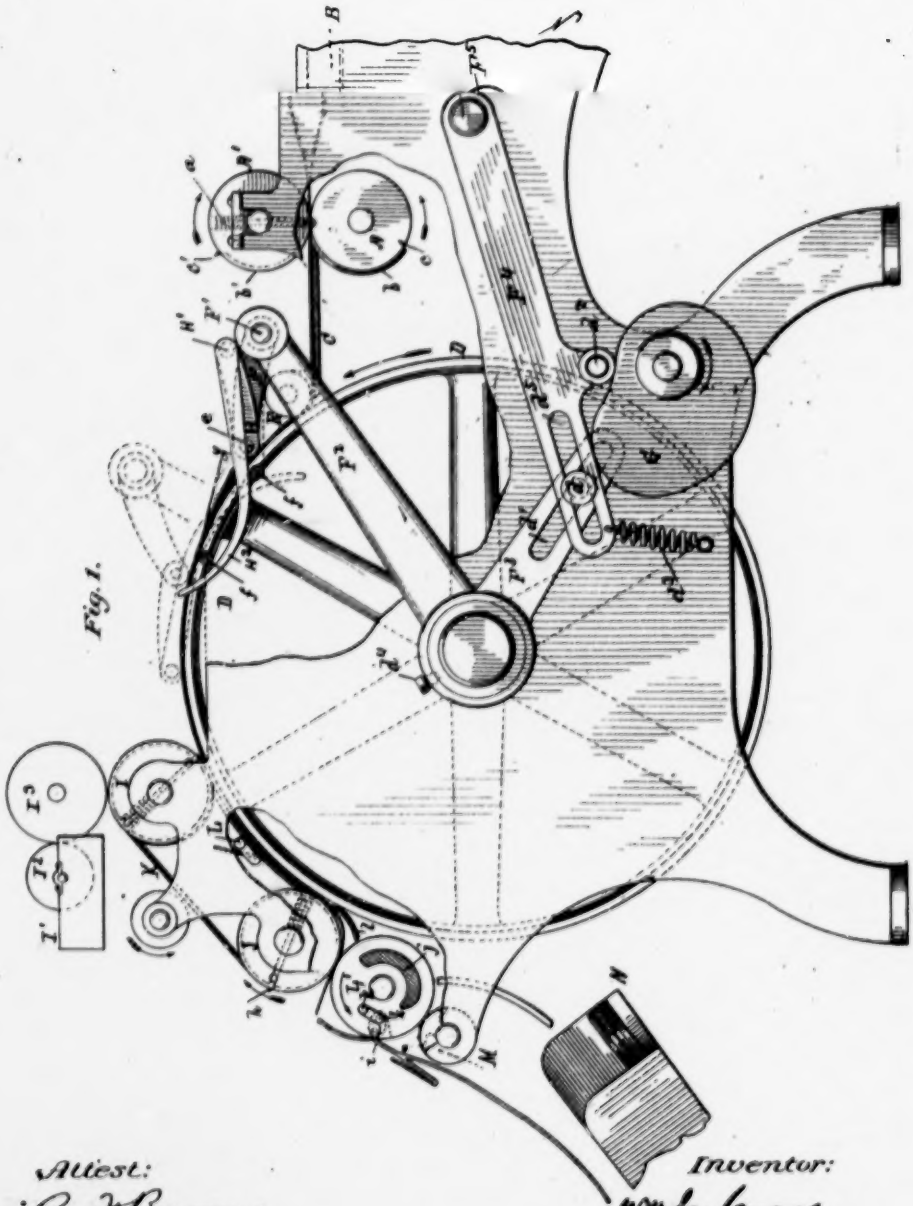

Fig. 1.

Attest:
R. F. Barnes.
E. F. Beck

Inventor:
Wm. C. Cross
by M. Bailey
his attorney

(No Model.) 7 Sheets—Sheet 2.

W. C. CROSS.

Paper Bag Machine.

No. 240,972. Patented May 3, 1881.

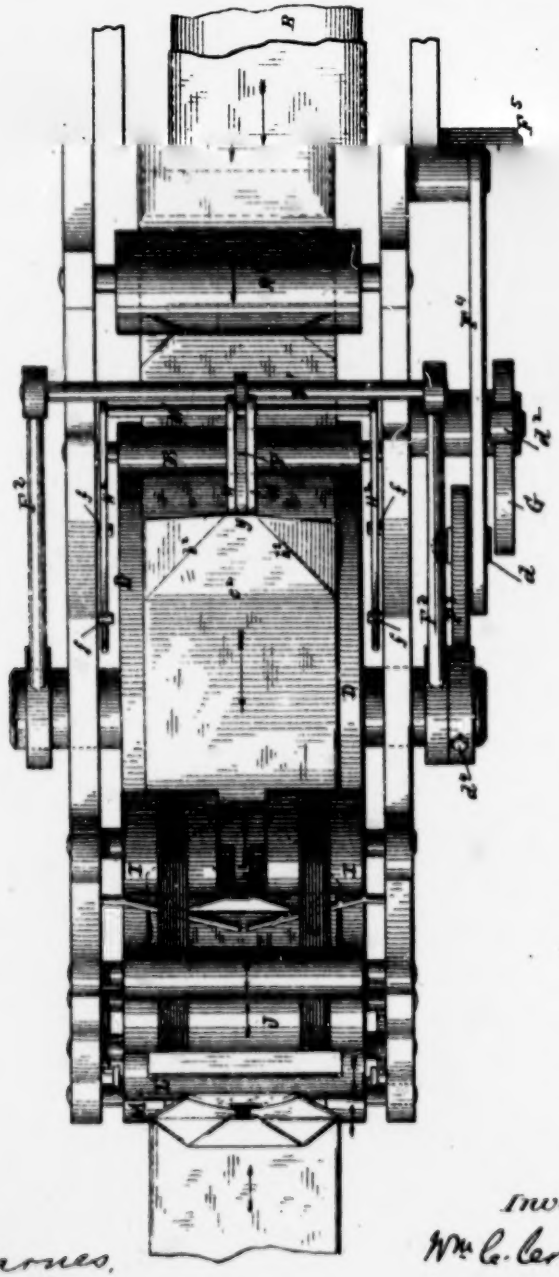

Fig. 2.

Attest:

R. F. Barnes.

C. F. Dick

Inventor:

Wm C. Cross

by M. Bailey

his attorney

(No Model.) 7 Sheets—Sheet 3.

W. C. CROSS.

Paper Bag Machine.

No. 240,972. Patented May 3, 1881.

Fig. 4.

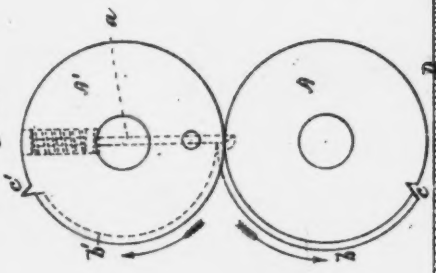

Fig. 6.

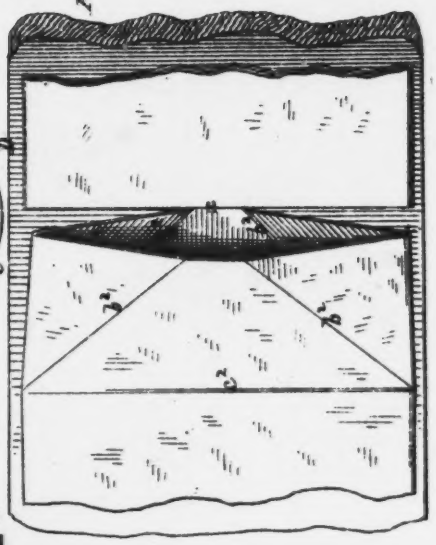

Fig. 3.

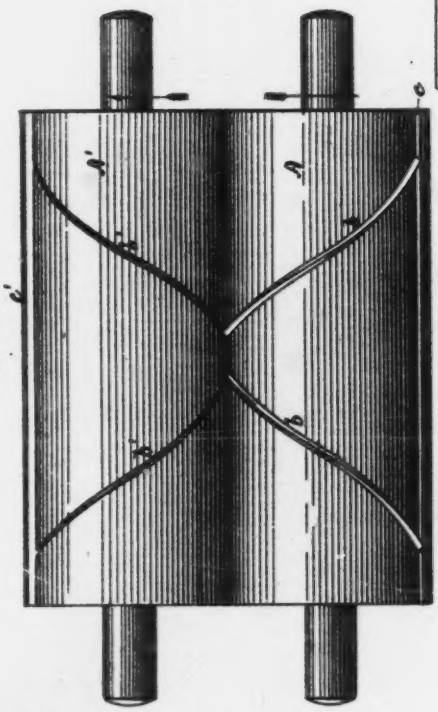

Fig. 5.

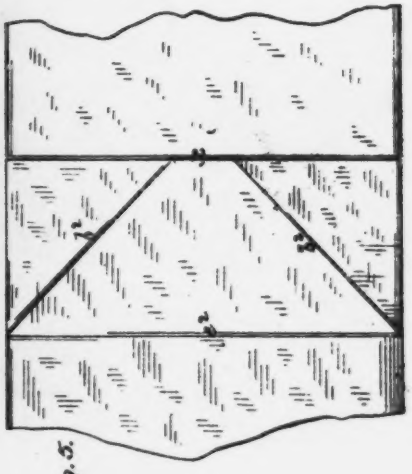

Attest:

R. F. Barnes.

E. F. Dick

Inventor:

Wm. C. Cross

by M. Dailey

his attorney

(No Model.) 7 Sheets—Sheet 4.

W. C. CROSS.

Paper Bag Machine.

No. 240,972. Patented May 3, 1881.

Fig. 7.

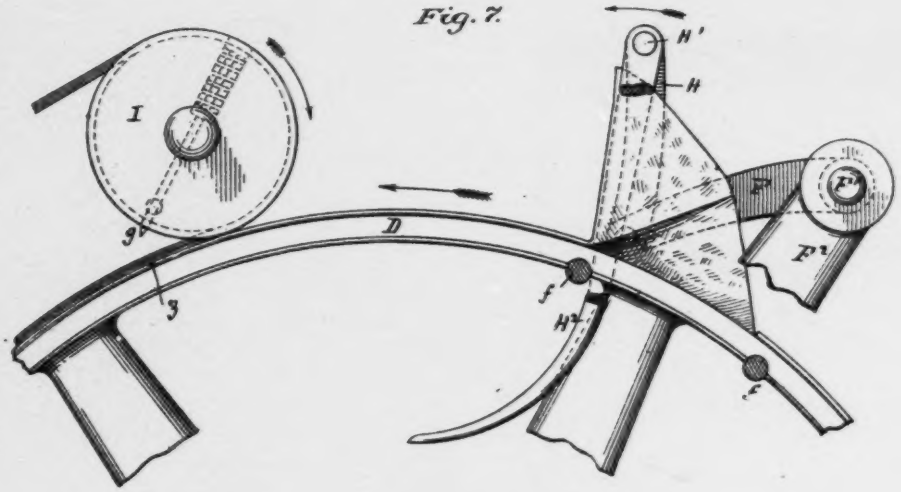

Fig. 8.

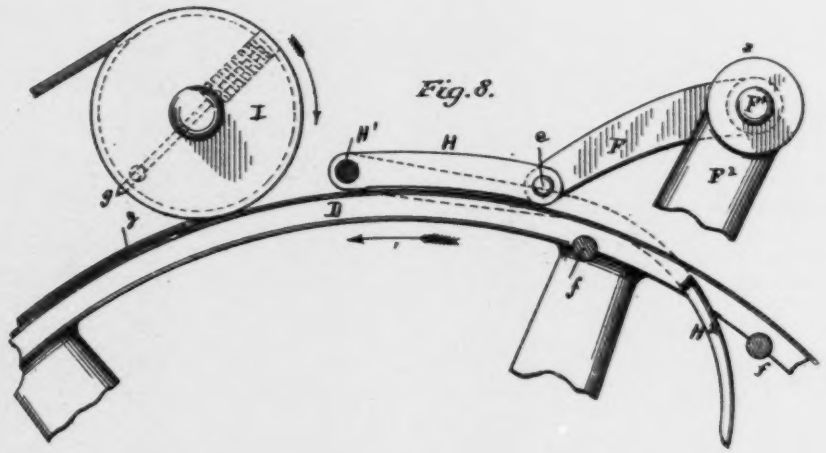

Attest:
R. F. Barnes.
E. H. Dick

Inventor:
Wm. C. Cross
by M. Bailey
his attorney

(No Model.) 7 Sheets—Sheet 5.

W. C. CROSS.

Paper Bag Machine.

No. 240,972. Patented May 3, 1881.

Fig. 10.

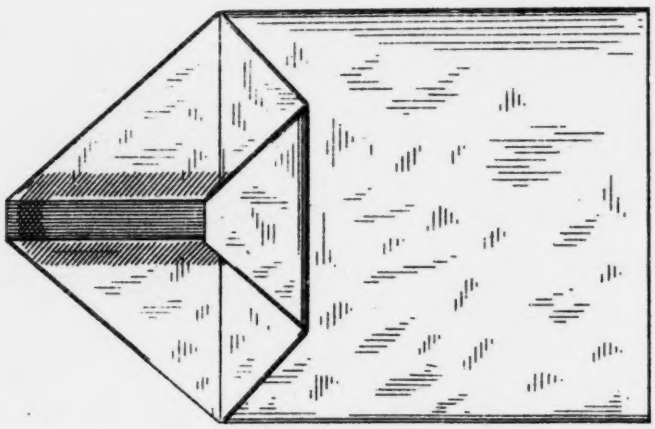

Fig. 9.

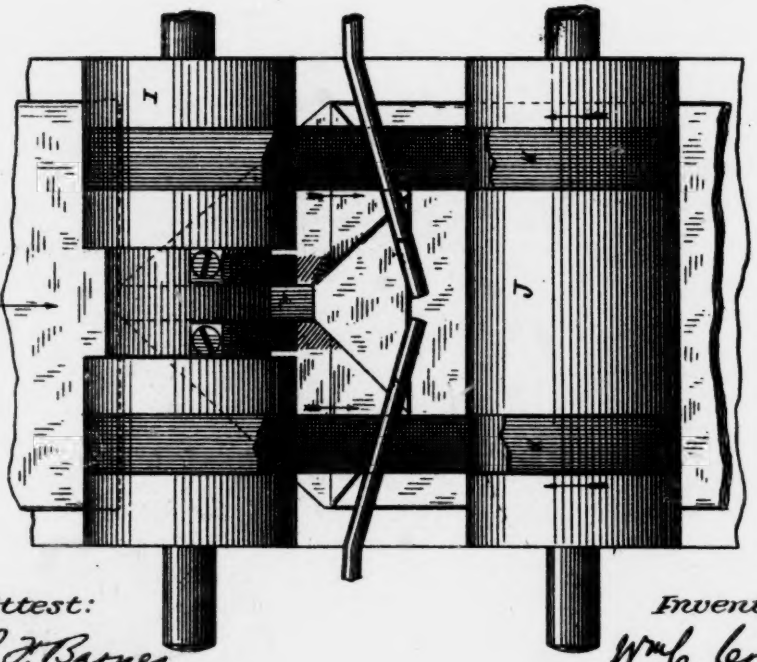

Attest:

R. F. Barnes.

E. H. Dick

Inventor:

Wm. C. Cross

by M. Bailey

his attorney

(No Model.) 7 Sheets—Sheet 6.

W. C. CROSS.

Paper Bag Machine.

No. 240,972. Patented May 3, 1881.

Fig. 14.

Fig. 15.

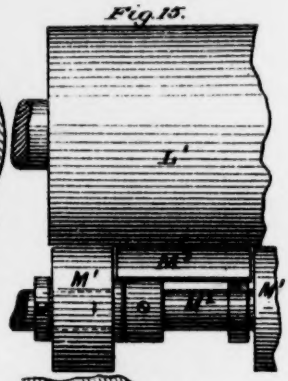

Fig. 11.

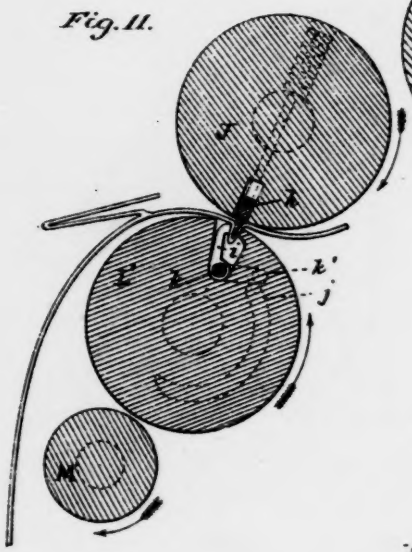

Fig. 12.

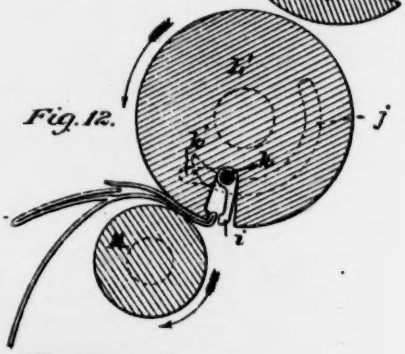

Fig. 13.

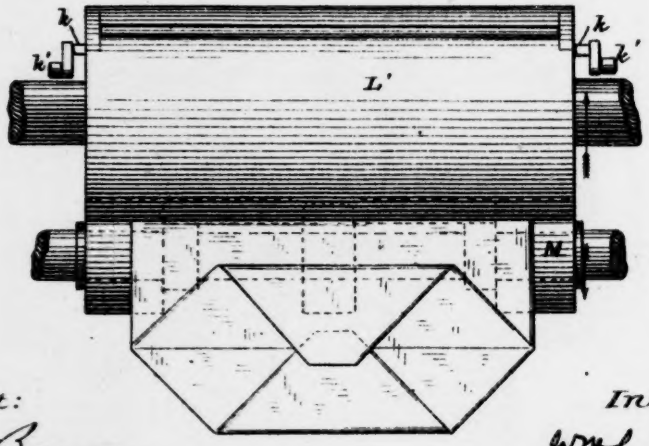

Attest:

R. F. Barnes.

E. A. Dick

Inventor:

Wm. C. Cross

by W. Bailey

his attorney

(No Model.) 7 Sheets—Sheet 7.

W. C. CROSS.

Paper Bag Machine.

No. 240,972. Patented May 3, 1881.

Fig. 16.

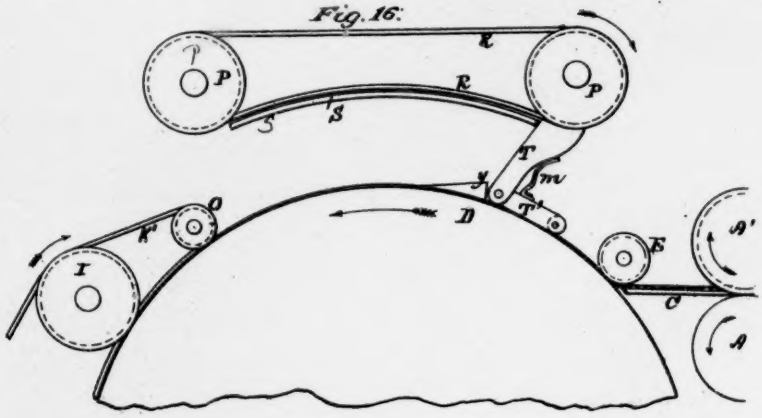

Fig. 17.

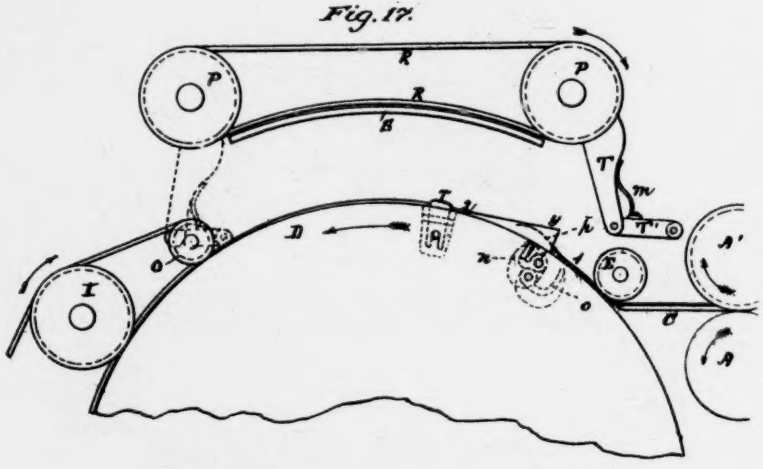

Fig. 18.

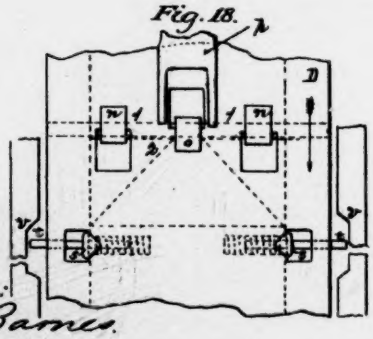

Fig. 19.

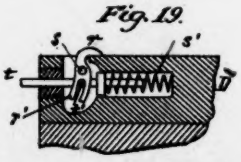

Attest:
R. F. Barnes.
E. A. Dick

Inventor:
Wm. C. Cross
by W. Bailey
his Attorney

UNITED STATES PATENT OFFICE.

WILLIAM C. CROSS, OF BOSTON, MASSACHUSETTS.

PAPER-BAG MACHINE.

SPECIFICATION forming part of Letters Patent No. 240,972, dated May 3, 1881.

Application filed February 2, 1881. (No model.)

To all whom it may concern:

Be it known that I, WILLIAM C. CROSS, of Boston, Massachusetts, have invented certain new and useful Improvements in the Art of Making Satchel-Bottom Paper Bags by Machinery, of which the following is a specification.

In making satchel-bottom paper bags by machinery it has been customary to form the primary fold, or "diamond fold," as it is usually termed, on that end of the tubular bag-blank which is in front relatively to the direction of feed. This brings to the rear that point or flap of the diamond fold that overlies the body of the blank, and it is an operation of some difficulty to successfully and rapidly fold the said flap. In some cases a following folder has been used to wipe over and down this flap, whether the blank be at rest or in motion. In other cases the flap has been folded by making at the same time a "blind" fold in the body of the bag. In another case the points of the diamond have been reversed so as to bring each point in succession to the front without reversing the body of the blank; and in still another case the whole blank has been reversed, so as to bring its mouth end foremost after the diamond fold has been made.

I have devised a simpler and more expeditious method of getting this overlying flap or point of the diamond fold to the front relatively to the feed or direction of movement of the blank through the machine, the same consisting in forming the diamond fold on the rear end of the blank, instead of on the front end, as heretofore, the result being that the act of thus laying the diamond fold necessarily brings to the front that flap or point of the diamond fold which overlies the body of the bag-blank. It is in this step in the art of making satchel-bottom bags by machinery that my invention principally resides.

It is manifest that the bag-blank can be thus operated on, whether it remain at rest or continue in motion during the time the diamond fold is being formed on its rear end. I prefer to keep the blank in uninterrupted motion in order to avoid intermittent movement of machinery and do more rapid work; and in the accompanying drawings I have represented a machine adapted for the purpose. I desire it to be understood, however, that the details of construction and arrangement of the various parts of the machine can be varied considerably so long as there is retained the feature of blank-holding and feeding devices combined with diamond-fold-forming mechanism organized and timed to its movements relatively to said holding and feeding devices, so that it shall operate to form the diamond fold on the rear end of the blanks as they pass in succession through the machine.

The nature of my invention and the manner in which the same is or may be carried into effect will be understood by reference to the accompanying drawings, in which—

Figure 1 is a side elevation of so much of a satchel-bottom-bag machine as needed for the purpose of illustrating my invention. Fig. 2 is a plan of the same. Fig. 3 is a front elevation, and Fig. 4 is a side elevation, on an enlarged scale, of the rolls by which the blank is creased preliminarily to making the diamond fold. Fig. 5 is a plan of a portion of the strip of centrally-connected blanks, showing the creases at the rear end of the blank. Fig. 6 is a like view of the same as it appears when on the cylinder or carrier. Figs. 7 and 8 are elevations, on an enlarged scale, representing the positions of the folding mechanism at different stages in the formation of the diamond fold. Fig. 9 is a plan, on an enlarged scale, of that portion of the machine by which the second fold of the satchel-bottom is made. Fig. 10 is a plan of the bag as it appears after said fold is completed. Figs. 11 and 12 are sectional side elevations of the devices for making the final fold, showing the same in the various positions which they assume during the formation of said fold. Fig. 13 is a front elevation of the final or delivery rolls with the completed bag passing out from between them. The remaining figures are views of modifications hereinafter referred to.

I have omitted from the drawings, in order to avoid obscuring those parts which operate directly on the blank, the gearing and motion-transmitting mechanism. These can be of any approved kind, and their arrangement and mode of application are within the knowledge of the workman. I have also omitted from the drawings the mechanism for pasting and form-

ing the paper tube from which the bag-blanks are cut, said mechanism being well known to those skilled in the art to which this invention pertains.

The machine shown in Figs. 1 and 2 is one adapted particularly to receive and operate on a connected series of blanks, each blank being connected with those contiguous to it by a central uncut portion, *x*, of the under ply. The manner of producing this connection is well known, a small cutter being employed in the trunk or former to make the central transverse cut in the upper ply over the portion *x* to be left uncut in the under ply, and both plies being subsequently severed simultaneously by a knife which leaves untouched the central connecting part, *x*. This knife is shown at *a* in one of the power-driven rolls A A′, which rolls also serve both to feed along the blanks and to crease them. The paper tube having the central transverse cut in its upper ply passes from the former or trunk B to and between the rolls A A′, and thence over a table, C, to the carrier. The carrier in the present instance consists of a rotating cylinder, D, and the connected series of blanks pass to this cylinder under the binding-roll E, which bears with yielding pressure on the cylinder and runs by frictional contact therewith. The under roll, A, is provided with diagonal ribs *b*, which match diagonal grooves *b′* in the upper roll, A′, and with a cross-groove, *c*, which matches a cross-rib, *c′*, on roll A′. The ribs and grooves *b b′* form in the rear end of the blank the creases b^3 b^3, Figs. 5 and 6, which determine the boundaries of the diamond fold, and the rib and groove *c c′* form the transverse crease c^3, which is the central line of fold of the diamond. By putting the ribs *b* on the under roll the creases b^3 are so formed as to facilitate the laying of the diamond fold, and also to cause the upper ply to stand up away from the under ply when the blank is stretched on the cylinder, as indicated in Fig. 6, thus opening the rear end of the blank to the diamond-fold-forming mechanism. By putting the rib *c′* on the upper roll, A′, the upper ply is indented from above along the line c^3, on which that ply is turned over in making the diamond fold.

The cutting and creasing devices on rolls A A′ are so placed with reference to the blank that the creasers will crease the rear end of the blank just before the cutter severs the same (excepting the central connection, *x*) from the main paper tube in the rear. The connected series of blanks creased and partially severed from one another passes under the binding-roll, up over the carrier-cylinder, moving in unison therewith, and held at the front in the bite of the roll I, which runs against and in unison with the carrier-cylinder. As each blank passes out from under the binding-roll E the creased rear portion of its upper ply rises, as shown in Fig. 6, and also at *y* in Figs. 1 and 2, thus opening its rear end to the mechanism for turning over and laying down said upper ply, and thus making the diamond fold. Various kinds of mechanism may be employed for the purpose. One convenient form is shown in the drawings. As there shown, it consists of a central finger, F, the front end of which a little more than clears the periphery of the cylinder. This finger is fast on a cross-bar, F′, which, in turn, is immovably secured to oscillating arms F^2, which are mounted loosely on the hub of the cylinder D, or are otherwise arranged so that their axis of oscillation shall be coincident with the axis of the cylinder. One of the arms F^2 is connected adjustably at d^4 to a slotted arm, F^3, which carries a roller-stud, *d*, adjustable in the slot *d′* of the arm. This stud projects loosely into the slot d^5 of another arm, F^4, pivoted at F^5 to the frame of the machine. The object of the adjustable connection between the parts F^2 F^3 F^4 is to regulate the length of throw or stroke and at the same time to bring the finger back always to the same point. The part F^4 is provided with a roller-stud, d^2, which runs against the periphery of a rotating power-driven cam, G, being held in contact therewith by a spring, d^3. When the machine is in motion the effect of this arrangement will be to impart an oscillatory movement to the finger F on the center of the carrier-cylinder as an axis, the finger moving back and forth once for every revolution of the cam. Upon the front end of the finger is pivoted at *e* the forked opener or folder H, which at its other end is hung so that it may turn on a cross-rod, H′, to the ends of which rod are rigidly fastened wiper-fingers H^2, which play between and are acted on by wiper-studs *f*, fixed to and projecting from the frame of the machine. These studs, although not so represented in the drawings, are in practice made adjustable to meet the wiper-fingers sooner or later in the stroke, as may be required by the size of bag to be made.

The action of the mechanism thus far described is as follows: Supposing the blank that is to be operated on is moving along uninterruptedly through the machine. As the rear y of the blank emerges from under the finger F (in which position it is represented in Figs. 1 and 2) the finger begins to move forward, thus entering the open rear end of the blank. By the time the finger has entered the bag nearly far enough to reach the central crease, c^3, it has moved far enough forward to bring the wiper-fingers H^2 in contact with the front wiper-studs, *f*. Continued forward movement of the finger F throws the opener H (by the action of studs *f* or wipers H^2) quickly forward on the pivot *e* as an axis, thereby first lifting the upper ply, as shown in Fig. 7, and then by the time the finger F has reached its extreme forward position turning the ply down, as shown in Fig. 8, thus making the diamond fold. The folding mechanism retains the position shown in the figure last referred to until the front overlying flap of the diamond is in such position that it will pass under the roll I, and then returns to the position shown in Fig. 1 in time to act on the rear end of the next succeeding blank. In thus laying the diamond fold I bring

to the front that flap which overlies the body of the blank, and have the blank in a position in which the succeeding folds can be made by any suitable known mechanism without difficulty. The second and third fold mechanism, which I am about to describe, is one convenient form of such mechanism; but I do not desire to be understood as restricting myself to the same. The roll I, hereinbefore referred to, has several functions. It carries the knife *g*, by which the connecting portion *x*, between succeeding blanks, is severed before the diamond fold is formed on the blank in rear, as indicated in Figs. 7 and 8, where the dark spot *z* indicates the dividing line between the blanks. It also carries the paste-ridges *g'*, Fig. 9, by which paste is deposited in lines on the diamond in the ordinary way, the supply of paste being drawn from the usual paste-trough I' and intermediate rolls, I^2 I^3. It also serves, in conjunction with the front roll, J, to hold the endless tapes K against the periphery of the carrier-cylinder D. These tapes, in fact, are the same as the carrier-tapes described in my Patent No. 232,945, dated October 5, 1880, and the cylinder D takes the place of the carrier-apron described in that patent, the two acting to carry along the blank and the tapes serving to determine the line of fold.

L are folding-fingers, which are arranged and operate in the same manner as described in my aforesaid Letters Patent, to wipe back and fold down upon a line determined by the tapes that flap which is brought up to them, which in this case is the flap that overlies the body of the bag-blank. The said mechanism is fully described in my said Letters Patent, and its action is also fully illustrated in Figs. 1, 2, and 9. It is sufficient to say that the blank passes out from under the roll J mouth end foremost, with the front overlying flap of the diamond folded back, as indicated in Fig. 10, leaving only the rear protruding flap to be folded in order to complete the bag. This last fold I make in the present instance by means of nipper-roll I', which runs against the roll J, the latter being provided with a cam-controlled spring tucker-blade, *h*, to act in conjunction with the spring-nipper *i'* of the roll I', the nipper normally closing and being opened and held open at stated intervals by means of a cam, *j*, fixed to the frame of the machine and acting against a crank-stud, *k'*, on the rocking nipper-shaft *k*. This arrangement of parts for making a fold is well known, being shown, for instance, in Stocking's Patent No. 222,544, of December 9, 1879. The operation is as follows: The blank passes, mouth end foremost, between the rolls J I', being guided to them by the plate or table *l*. The parts are so timed and positioned that at the time the rear unfolded flap of the diamond comes between the rolls the blade *h* will meet the flap on the proper line of fold and will tuck the flap along this line down into the bite of the nipper, which, being released at the instant from the control of its cam, will close on the flap, as indicated in Fig. 11. Continued rotary movement of the roll I' will carry the bag held by the flap in the bite of the nipper through between the roll I' and a binding or pressure roll, M, the bag in this operation being reversed so that it passes through satchel-bottom end first. Between these rolls the folds are pressed and the bottom completed, and the bag is thence discharged into a suitable receptacle, N.

The roll M need not be a full roll, but may be cut away, as shown at M' in sectional side elevation, Fig. 14, and in front elevation, Fig. 15. In this arrangement the parts M' are friction-wheels, which revolve loosely on the stationary shaft M^2 and run by contact with roll I'. They take hold of the side edges of the bag and serve to feed it along. Between the wheels M' is a curved segmental plate, M^3, fixed on the stationary shaft M^2, between which plate and roll I' the folds of the satchel-bottom are pressed. In this arrangement the nipper should be caused to retain its hold on the bag longer than where a roll, M, is employed, the nipper in the latter case releasing its hold as soon as the flap to be folded is fairly in the bite of the rolls, as indicated in Fig. 12.

In Figs. 16 and 17 is shown, in further illustration of my invention, another mechanical device for turning over the upper ply at the rear of the blank in order to make the diamond fold. The finger T, which enters the rear end of the blank and turns over the ply, is fastened to an endless power-driven belt or apron, R, which runs around rolls or pulleys P, and on its lower side moves upon a segmental supporting-plate, S, which is slotted or otherwise formed to permit the passage of the finger T, and is curved upon a circle struck from the axis of cylinder D as a center, so that the finger, when acting on the bag, will follow the curvature of the cylinder. To the lower end of the finger is pivoted a rearwardly-projecting pressure-bar T', which carries at its free end a friction-roll, and is held by a spring, *m*, normally in the position shown in Fig. 17 in full lines, so that when the finger reaches the cylinder the presser will bear upon the periphery of the cylinder with yielding pressure, as indicated in Fig. 16. The belt R travels much faster than the cylinder, and, inasmuch as it carries but one finger, in this instance makes one full revolution for every bag-blank acted on. It is so timed in its movements that the finger will reach the point shown in Fig. 16 at the time the open rear end of the blank has attained the position shown in the same figure. Continued movement of the parts causes the faster-moving finger to raise and fold forward and down, the upper ply thus making the diamond fold, and as the finger, after reaching its forward position, (indicated by dotted lines in Fig. 17,) rises from the cylinder the presser T', which follows, drops and maintains contact with the laid-over flap of the diamond fold until the latter is fairly in the bite of the auxiliary carrying-tapes K'. The latter tapes extend from the roll I around wheels O, mounted

on hubs or short studs, so that the presser may be free to pass between them, as shown by dotted lines, Fig. 17, and thus continues its contact with the blank for the proper length of time.

In lieu of employing a connected series of blanks, as indicated in Fig. 16 and the preceding figures, I can sever each blank before or at the time the blank reaches the cylinder, putting, for this purpose, the proper knife in either the binding-roll E or the creasing-rolls A A'. The latter is the preferable arrangement.

In order to carry the severed blank along on the cylinder I can make use of the devices indicated in Figs. 17 and 18. The said devices, as shown in side elevation, Fig. 17, and plan, Fig. 18, consist of three nippers, *n n o*, mounted in the cylinder D. The outside nippers close by a movement to the rear or any direction opposite to the rotation of cylinder, and their function is to close on the mouth end of the blank at the sides, as indicated by dotted lines 1, Fig. 18, and thus carry the blank along. The central nipper, *o*, closes by a movement to the front or in the direction of rotation of the cylinder, and its function is to close on the central part of the rear end of the under ply of the blank 2, Fig. 18, in front of blank 1, and thus hold down the under ply at this point while the diamond-fold-forming mechanism is acting on the upper ply. All the nippers are operated in the usual way, closing by the action of springs and opening by the action of cams attached to the frame of the machine, and operating on tappets or crank-studs attached to the nipper rock-shafts. The nippers hold the blank for the proper time respectively, and then release it.

To hold the rear end of the blank open I employ a light spring, *p*, which extends from the trunk B, up under the binding-roll E, to the point indicated by dotted lines in Fig. 17. The spring may have a branched or spread-apart free end, so that it will with certainty hold the rear end of the blank open, and is forked, so as to permit the passage of nipper *o*. The spring is light, so that it will yield readily to the blank which passes around it.

I can also, if desired, use side clamps or nippers, *r*, which have a laterally-vibratory movement on pivots *s* in the cylinder D, and close over the blank at the center line of fold of the diamond, thus insuring that the upper ply shall fold over this line. Movement is imparted to each clamp by a spring, *s'*, which closes it, and a sliding rod, *t*, pressed outwardly by the spring and acted on to move against the stress of the spring and open the clamp by a proper cam, *v*, on the machine-frame. The rod *t* is connected with the clamp by means of pin *t'*, which projects laterally from the rod into the forked inner end, *r'*, of the clamp, as shown more clearly in section in Fig. 19.

With respect to the creaser-rolls, I desire to say that the diagonal creasers can be used without the cross-creaser *c'*, which determines the central line of fold of the diamond. I also remark that these rolls can be used to advantage, not only as adjuncts to my present improvement, but also in machines in which the diamond fold is formed on the front end, instead of the rear end, of the blank. Of course in such case the position of the creaser ribs and grooves should be altered to adapt them to the change.

I also remark that, in lieu of rolls, plates or other instrumentalities having proper movement to and from the blank may be employed to crease the same.

Having described my invention, what I claim, and desire to secure by Letters Patent, is as follows:

1. That step in the art of making a satchel-bottom paper bag by machinery which consists in forming the diamond fold on the blank contained in the machine by lifting and folding forward and down upon the body of the blank the rear portion of one ply, substantially as hereinbefore set forth, whereby the diamond fold is laid with that flap or point which overlies the body of the blank in front relatively to the after movement of the blank through the machine.

2. The improvement in the art of making satchel-bottom paper bags by machinery which consists in forming the primary or diamond fold upon the rear end of the blank while the latter is continuously moving, substantially as and for the purposes hereinbefore set forth.

3. The combination, with the bed or support for the blank and means, substantially such as described, for holding down upon said bed the central portion of the rear end of the contiguous ply of the blank, of mechanism arranged and operating, substantially as described, to lift and fold forward and down upon the body of the blank the rear portion of the other ply, for the purpose of laying the diamond fold, substantially as set forth.

4. The combination, with the continuously-moving blank-carrier and means for holding the blank thereon, of diamond-fold-forming mechanism constructed, arranged, and operating, substantially as described, to form the diamond fold on the rear ends of the successive blanks delivered to and conveyed along by the carrier, substantially as hereinbefore set forth.

5. The combination, with the carrier and mechanism for feeding and delivering the blanks thereto, of diamond-fold-forming mechanism, substantially such as described, constructed, arranged, and operating to form the diamond fold on the rear ends of the successive blanks, and second and third fold forming mechanisms, substantially such as described, the combination being and acting substantially as hereinbefore shown and set forth.

In testimony whereof I have hereunto set my hand this 26th day of January, 1881.

WILLIAM C. CROSS.

Witnesses:
E. A. DICK,
N. C. LANE.

(No Model.) 4 Sheets—Sheet 1.

F. W. LEINBACH, C. A. WOLLE & E. H. BRUNNER.

Paper Bag Machine.

No. 242,661. Patented June 7, 1881.

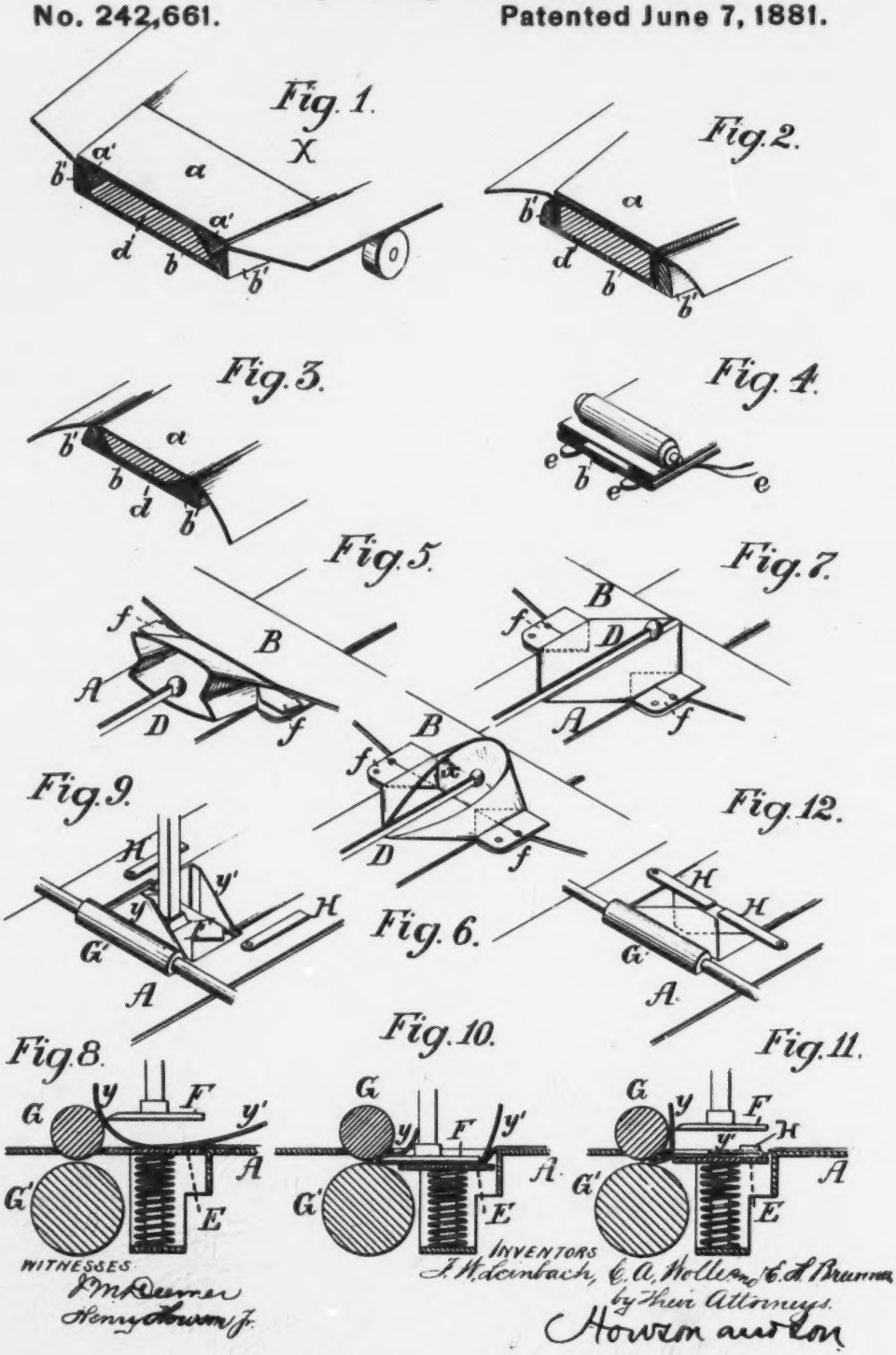

WITNESSES
J. M. Deemer
Henry Howson Jr.

INVENTORS
F. W. Leinbach, C. A. Wolle and E. H. Brunner
by their Attorneys.
Howson and Son

(no Model.) 4 Sheets—Sheet 2.

F. W. LEINBACH, C. A. WOLLE & E. H. BRUNNER.

Paper Bag Machine.

No. 242,661. Patented June 7, 1881.

Fig. 13.

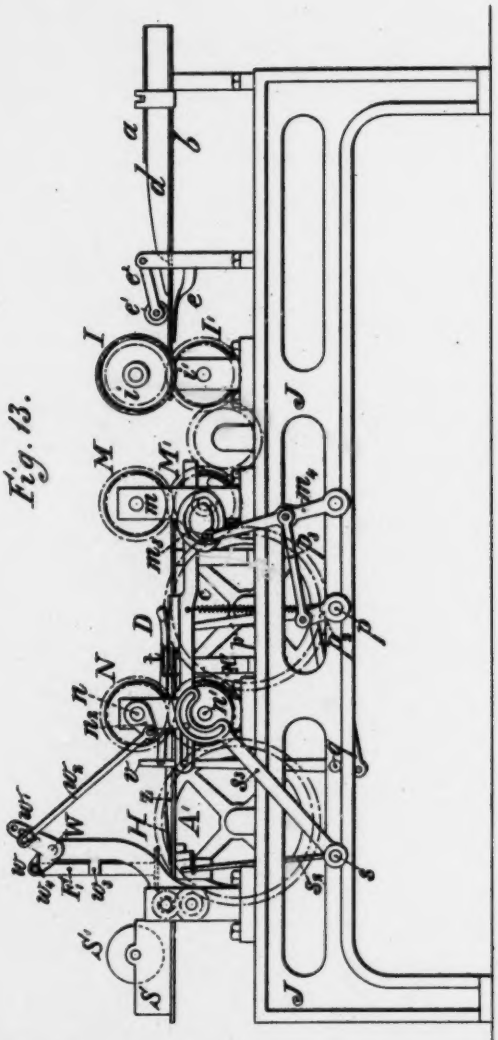

Fig. 14.

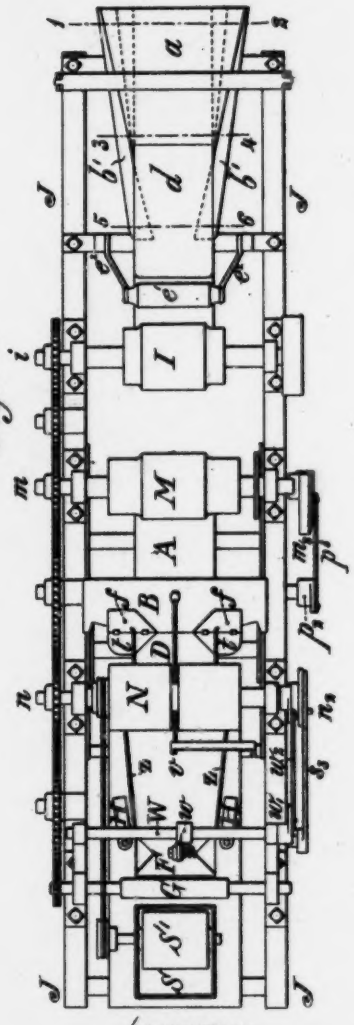

WITNESSES

Wm. Dumer

Henry Howson Jr.

INVENTORS:

F. W. Leinbach

C. A. Wolle

and

E. H. Brunner.

by their attorneys.

Howson & Sons

(No Model.) 4 Sheets—Sheet 3.

F. W. LEINBACH, C. A. WOLLE & E. H. BRUNNER.

Paper Bag Machine.

No. 242,661. Patented June 7, 1881.

Fig. 15½

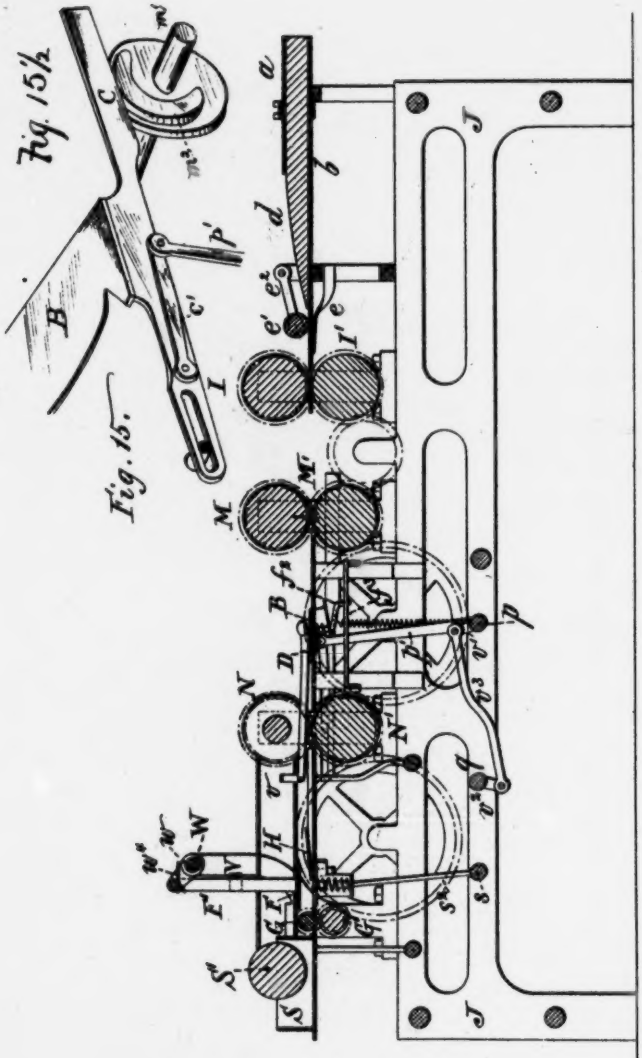

Fig. 15.

Fig. 16.

Fig. 17.

Fig. 18.

WITNESSES:

J. M. Deemer

Henry Howson Jr.

INVENTORS.

F. W. Leinbach

C. A. Wolle

and

E. H. Brunner

by their Attorneys

Howson and Son

(No Model.) 4 Sheets—Sheet 4.

F. W. LEINBACH, C. A. WOLLE & E. H. BRUNNER.

Paper Bag Machine.

No. 242,661. Patented June 7, 1881.

Fig. 19.

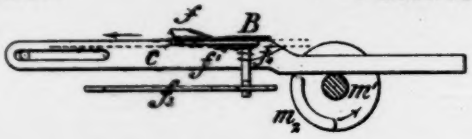

Fig. 20.

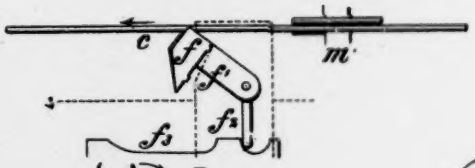

Fig. 21.

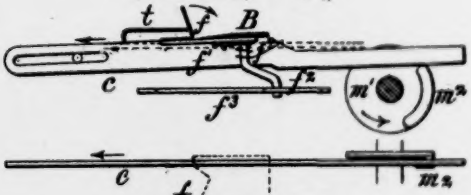

Fig. 22.

Fig. 23.

Fig. 24.

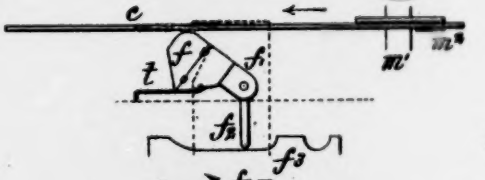

Fig. 25.

Fig. 26.

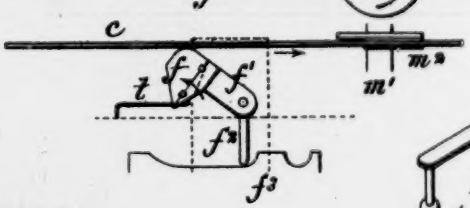

Fig. 27.

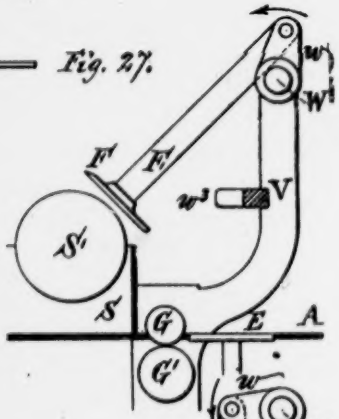

Fig. 28.

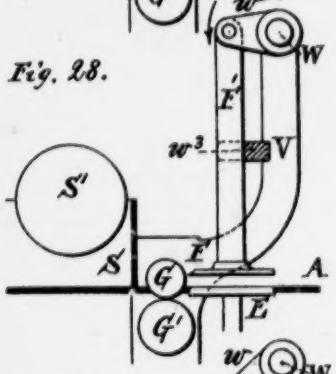

Fig. 29.

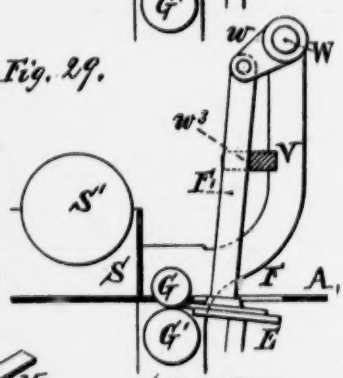

Fig. 30.

WITNESSES:

J. McDermer

Henry Howson Jr

INVENTORS:

F. W. Leinbach

C. A. Wolle

and

E. H. Brunner,

by their Attorneys

Howson and Son

UNITED STATES PATENT OFFICE.

FELIX W. LEINBACH, CLARENCE A. WOLLE, AND EDWARD H. BRUNNER, OF BETHLEHEM, PENNSYLVANIA, ASSIGNORS TO CLARENCE A. WOLLE, OF SAME PLACE.

PAPER-BAG MACHINE.

SPECIFICATION forming part of Letters Patent No. 242,661, dated June 7, 1881.

Application filed October 4, 1880. (No model.)

To all whom it may concern:

Be it known that we, FELIX W. LEINBACH, CLARENCE A. WOLLE, and EDWARD H. BRUNNER, all citizens of the United States, residing in Bethlehem, in the county of Northampton and State of Pennsylvania, have invented certain Improvements in the Manufacture of Paper Bags and in Machinery therefor, of which the following is a specification.

Our invention relates to a modified form of the machine for which Letters Patent No. 218,036 were granted to our assignee on the 29th day of July, 1879, the main difference between the present machine and that patented being that, while in the patented machine the bags were made from plain tubes, in the new machine the bags are made from tubes having tucked-in sides.

The invention comprises certain features of construction and certain combinations of parts whereby a sheet of paper is first folded so as to form the tube with tucked-in sides, and this tube is then cut into lengths and formed into bags.

In the accompanying drawings, Figures 1 to 12, Sheet 1, are diagrams illustrating the successive operations in the manufacture of the bag; Fig. 13, Sheet 2, a side view of the complete machine; Fig. 14, a plan view of the same; Fig. 15, Sheet 3, a longitudinal section of the machine; Fig. 15½, a detached perspective view of part of Fig. 15; Figs. 16, 17, and 18, transverse sections of Fig. 14 on the lines 1 2, 3 4, and 5 6, respectively; and Figs. 19 to 30, Sheet 4, detached views of different parts of the machine, illustrating the working of said parts.

We will first describe the successive steps in the manufacture of the bag in connection with those parts only of the machine which act directly upon the web or tube of paper of which the bag is formed, reference being had to Sheet 1 of the drawings.

The paper, in the form of a web, X, of the proper width, is first drawn through a former comprising an upper plate, *a*, a lower plate, *b*, and an intervening block, *d*, shaped as described hereinafter, whereby the web of paper, as it is drawn through the former, has first a V-shaped tuck formed thereon, as shown in Fig. 1, this V-shaped tuck being gradually flattened until it assumes the condition shown in Fig. 2, and the flattened tuck being then folded inward, as in Fig. 3, prior to the bending of the opposite edges of the web of paper inward beneath the plate *b* by means of fingers *c*, one edge of the web overlapping the other, as shown in Fig. 4. During this folding operation the web of paper and the inner edges of the tucks are pressed against the plate *b* by a roller, *e'*, carried by spring-arms *e²*, so that the tension on the paper caused by folding the edges is prevented from disturbing the tucks. One or both edges of the web of paper have been previously pasted by any of the means now employed in paper-bag machines—by the roller shown in Fig. 1, for instance—so that as the tube passes between the drawing-rolls the seam will be subjected to the necessary pressure and the tube with tucked-in sides completed.

It will be observed that the drawing-rolls and the pressure-roller *e'* are reduced in diameter at the ends, so that the edges of the tube are not subjected to pressure and are not flattened. The tube is fed forward over a table, A, and as it traverses a transverse pressing blade, B, acts upon the tube at some distance from the end of the same, such pressure (owing to the fact that the edges of the tube are not flattened) causing the mouth of the tube to gape, so as to permit the free entrance of the distending-rod D, which moves in a direction contrary to that of the tube and blade B, as shown in Fig. 5. While these operations are being performed a pair of hinged and folded plates, *f*, having inclined ends, are thrust into each of the side tucks of the tube, as shown in said Fig. 5, and as the movements of the plate B and rod D continue the plates *f* are unfolded, as shown in Fig. 6, this operation serving to form the internal triangular flaps *x*, and to aid the distending-rod D in completing the primary fold of the bag-bottom, as in Fig. 7. The plates *f* are then withdrawn, the pressing-blade elevated, and the distending-rod retracted, so that the tube having the primary fold on the end of the same is free to pass on until said primary fold occupies a position directly over a yielding table, E, adapted to

an opening in the table A, as shown in Fig. 8, said opening being of the proper size for the desired bag-bottom. A plate, F, to the under side of which paste has been applied, then descends, presses the primary fold of the tube against the plate E, and continuing to descend depresses said plate, thereby causing the unconfined flaps *y y'* of the primary fold to rise, as shown in Fig. 9, thus commencing the finishing-fold of the bottom. As the plate F descends it has a forward movement imparted to it, so as to insert the folded front edge of the tube beneath a of rollers, G G', as shown in Fig. 10, these rollers serving to draw the tube forward while the plate F is retracted and caused to ascend. As the plate ascends the front edge of the same applies paste to the under side of the flap *y*, and vibrating fingers H H act on the flap *y'*, so as to fold the same beneath the plate F, as shown in Fig. 11, prior to the folding down of the flap *y* over said flap *y'*, as shown in Fig. 12. The finishing-fold is now complete, and the proper pressure is applied to the same as the end of the tube passes between the rollers G G'. The mechanism whereby the above-described operations are effected is illustrated in Sheets 2, 3, and 4.

J J are the opposite side frames of the machine, which are furnished with suitable bearings for the rollers G G', and for three pairs of shafts, *i i'*, *m m'*, and *n n'*, the said shafts and the rollers being connected by suitable gearing, so as to revolve in the proper directions and at the proper rate of speed. The side frames also have bearings for three transverse shafts, *p*, *q*, and *s*, the operations of which will be described hereinafter. The shafts *i i'*, *m m'*, and *n n'* carry, respectively, rollers I I', M M', and N N', the rollers I I' and N N' being simple feed-rollers, but the rollers M M' being both feed and cutting rollers, the upper roller, M, carrying a transverse blade, and the lower roller, M', a transverse strip of rubber, cork, or like material, so that as the tube is fed forward by the rollers it will be cut into proper lengths to form bag-blanks.

As before described, the former, whereby the tube with tucked-in sides is made from a single web of paper, comprises plates *a* and *b* and an intervening block, *d*. The plate *a* is gradually widened from the inner to the outer end, and the plate *b* and block *d* are partly straight and partly flared, the block *d* being somewhat shorter than the plate *b*, and the plate *a* shorter than the block *d*, as shown in Figs. 13, 14, and 15. At and near each edge the plate *a* has on the under side a rib, *a'*, which is V-shaped at the outer end of the plate, as shown by Fig. 16, but gradually merges into the thin vertical rib shown in Fig. 17. The opposite edges of the block *d* are inclined at the outer end of said block, as shown in Fig. 16, and undercut at the inner end of the block, as shown in Fig. 18, the two portions merging into each other, so that the edges of the block, at or about the center of the same, are substantially vertical, as shown in Fig. 17. The plate *b* has on its opposite edges flanges *b'*, said flanges flaring outwardly at the outer end of the plate, as in Fig. 16, and projecting inwardly, as shown in Fig. 18, at the opposite end, the outwardly-flaring position of each flange merging gradually into the inwardly-projecting portion, as shown in Fig. 17. The edges of the block *d* and the flanges of the plate *b* thus form a recess corresponding in shape with the rib *a'* of the plate *a*, and, from the point at which the plate *a* is discontinued, the edges of the block *d* and the flanges of the plate *b* correspond with each other until said flanges and block are discontinued.

The pressing-plate B is carried by a pair of bars, *c*, one end of each of which is slotted and adapted to a guiding-pin on the adjacent side frame, J, the opposite end being acted upon by a cam, m^2, on the shaft *m'*, so that the elevation and depression of the plate at the proper intervals is effected. In order to effect the longitudinal reciprocation of the plate, each bar *c* is connected, by a link, *c'*, to the upper end of an arm, *p'*, on the shaft *p*, and a rocking motion is imparted to the latter by a cam, m^3, on the shaft *m'*, said cam acting through the medium of an arm, m^4, pivoted to a stud on the frame, an arm, p^1, on the shaft *p*, and a connecting-rod, p^2.

To the under side of the plate B, near each end of the same, is pivoted an arm, *f'*, the outer end of which carries one of the pairs of hinged plates *f* before alluded to. The pivot-rods of the arms are bent at the lower ends, so as to form cranks f^3, which are acted upon by cam-plates f^4, and the arms *f'* are acted upon by coiled springs f^5, the tendency of which is to thrust said arms outward when the cranked ends of the pivot-rods are released from the control of the cams f^4. Fingers *t*, having hooked ends, serve to fold and unfold the hinged plates *f* as the latter are traversed in the manner shown in Figs. 19 to 26, Sheet 4, these views representing the movements of one pair of plates, *f*, and the operating devices therefor. In Figs. 19 and 20 the plate B has been depressed and is just about to commence its forward movement, the arm *f'* being extended and the plates *f* folded. As the plate B moves forward the cranked end f^3 of the pivot-rod of the arm *f'* is acted upon by the cam-plates f^4, so as to cause the inward movement of the end of the arm and of the folded plates *f* carried thereby, the forward movement bringing the plates *f* under the control of the finger *t*, by which they are unfolded, as shown in Figs. 21 and 22. Further forward movement of the plate B effects the release of the cranked end of the pivot-rod of the arm *f'* from the control of the cam f^4, and the spring f^5 then causes the arm *f'* to swing outward, as shown in Figs. 23 and 24. The plate B is now elevated and commences to move backward, when the hooked end of the finger *t* engages with the edge of the unfolded plate *f* and causes the refolding of the same, as shown in Figs. 25

and 26. There is no inward movement of the plates *f* during the rearward movement of the plate B, owing to the fact that the end of the pivot-rod of the arm *f'* is raised clear of the cam f^2, and is not again brought into line with the same until the plate B reaches the limit of its rearward movement and is again depressed.

The distending rod D is adapted to a groove in the feed-roll N, and the longitudinal reciprocation of said rod is effected by means of a bent arm, *v*, on the shaft *q*, a rocking motion being imparted to the latter from the shaft *p* through the medium of arms v' v^2 and a connecting-rod, v^3. (See Figs. 13, 14, and 15.)

The plate F is secured to a bar, F', which is hung to an arm, *w*, on a transverse shaft, W, adapted to bearings in brackets on the side frames, J, and having a rocking motion imparted to it from the shaft *n* through the medium of a crank, n^3, an arm, w', and a connecting-rod, w^2. A transverse bar, V, carries a slotted block, w^3, which embraces the bar F', and serves as a guide and fulcrum for the same, as described hereinafter, a spring, w^4, tending to keep the bar F' in contact with said fulcrum-block during a certain portion of the movement of said bar.

S is a paste-trough, in which is a roller, S', the latter being rotated by means of a belt from a pulley on the shaft *n*.

The three positions of the plate F are illustrated in Figs. 27, 28, and 29, Sheet 4. On reference to Fig. 27 it will be observed that when the arm *w* is at the limit of its movement in one direction the plate F is adjacent to the roller S' As the arm *w* commences to move in the direction of the arrow the plate F is brought into contact with the roller S' and receives paste therefrom, and as the movement of the arm continues said plate F is moved downward and away from the roller S', this movement continuing until the bar F' is substantially vertical and bears against the fulcrum w^3. (See Fig. 28.) Continued movement of the arm *w* in the direction of the arrow imparts a downward and slight inward movement to the plate F until the arm *w* reaches the horizontal position; but on continuing the movement beyond this the plate F will, owing to the bearing of the bar F' on the fulcrum w^3, have an outward thrust as well as a vertical movement, as shown in Fig. 29, the object of this movement being to effect the tucking of the fold of the bag-bottom between the rollers G G', as described in the first part of the specification.

The table A has guiding-strips *z*, whereby the bag-blank is properly directed to the plate F and table E, and the folding-arms H are inclined in respect to the surface of the table A, so as to insure a proper folding action on the flap *y'* of the bag-bottom. The said arms H are carried by shafts adapted to inclined bearings on the under side of the table A, and each of said shafts has an arm, *s'*, to a slot in which is adapted the upper end of an arm, s^3, on the shaft *s*, a rocking motion being imparted to the latter at the proper intervals by means of a crank-pin on the shaft *n'*, said crank-pin being adapted to a segmental slot in an arm, s^3, secured to the shaft *s*. The segmental slot in the arm, in connection with the crank-pin, insures the necessary rapid vibration of the shaft *s* and the proper dwell between said vibrations, owing to the lost motion of the pin in the slot.

The machine is continuous in its operation, and can be driven at a very high rate of speed, both of which features are of importance in the manufacture of bags on a commercial scale, as it is essential that the bags shall be made rapidly and cheaply.

In carrying out our invention minor features of construction may be varied without departing from the general idea of the machine. For instance, the plate *b* and block *d* of the former may be made of one piece, suitably slotted and grooved, and the mode of hanging and operating the side-folding plates *f* may be modified, and in some cases the devices for forming the tube with tucked-in sides may be independent of the devices for making the bag from the tube, said tube being fed from one machine to another. The construction shown, however, is preferred as being more compact and economical.

It will be observed in Fig. 14 that the opposite ends of the plate F have V shaped notches formed therein, so as to accommodate the triangular flaps *x*, formed in making the primary fold of the bottom.

We claim as our invention—

1. The mode herein described of making a tube with tucked-in sides, said mode consisting in pasting one or both edges of a longitudinally-moving sheet or web of paper, forming vertical tucks in said web at proper distance apart, gradually flattening and bending inward said tucks, and finally folding over and securing the edges of the web, all substantially as specified.

2. The combination, in a machine for making paper tubes or paper bags, of mechanism for longitudinally feeding a web or sheet of paper and pasting one or both edges of the same as it is so fed, a former constructed substantially as described, whereby vertical tucks are first formed in the web and then flattened and bent inward, and folding devices whereby the opposite edges of the web are caused to overlap each other and complete the tube, all substantially as specified

3. The combination, in a paper-bag machine, of devices for feeding a tube, a longitudinally-moving rod and plate for distending and folding back the mouth of the tube, and laterally-moving plates for spreading and folding the tucked-in sides of the tube, whereby the primary fold of the bag-bottom is formed, all substantially as specified.

4. The combination, in a paper-bag machine, of devices for feeding a tube, a rod and plate for distending and longitudinally folding the mouth of the tube, side-folders for acting on

the tucked-in sides of the tube, a plate for transversely creasing the primary fold of the bottom, and folders or bending down and securing the flaps formed thereby, all substantially as specified.

5. The within-described former for tucking the web of paper, said former comprising the plate *a*, with rib *a'*, the plate *b*, with flange *b'*, and the intervening block *d*, with inclined and undercut edges, all substantially as set forth.

6. A former having slots merging gradually from a V shape at one end of the former into single contracted and inwardly-inclined slots at the other end of the former, as specified.

7. The combination of tube-feeding and severing devices, the presser-plate, the distending-rod, two pairs of hinged plates, *f*, and means whereby said plates are folded and unfolded and carried laterally from and toward the tube, all substantially as specified.

8. The combination of a pressing-plate, B, arms *f'*, pivoted to said plate B, and hinged plates *f*, carried by said arms *f'*, as set forth.

9. The hinged folding plates *f*, each having a beveled inner end, whereby, when the plates are unfolded, said inner ends are adapted to the internal triangular flaps formed in the bag-bottom, all substantially as set forth.

10. The combination of the hinged plates *f* and their carriers with hooked rods *t*, for folding and unfolding said plates *f*, as set forth.

11. The combination of the pressing-plate B, and means for reciprocating and for elevating and depressing the same, the hinged plates *f*, the pivoted arms *f'*, carrying the same, the cranked rods f^2, the cam-plates f^3, and the springs f^4, as set forth.

12. The combination of the plate B, guided rods *c*, cams m^2, links *c'*, arms *p'*, rock-shaft *p*, and means for vibrating the latter, as set forth.

13. The combination of tube-feeding devices, a table, A, having an opening therein, rolls G G', adjacent to said opening, a plate, F, and means whereby the plate is first moved vertically to crease the tube, and then longitudinally to tuck the fold between the rolls G G', as set forth.

14. The combination of a table having an opening therein, a paste trough and roller, a blade, F, and mechanism whereby a combined vibrating movement over the paste-roller and a vertical reciprocating movement through the opening are imparted to the said blade, as described.

15. The combination of the table A, having an opening therein, the yielding table E, the plate F, having a combined vertical and vibrating movement, the rollers G G', the pivoted folding arms H H, and means for operating said blade, rollers, and arms, as set forth.

16. The combination of the plate F and its bar F', the shaft W, having an arm, *w*, to which said bar is hung, the fulcrum-block w^2, the spring w^3, and means for vibrating the shaft W, as set forth.

17. The combination of the pivoted folding arms H, the spindles of which have slotted arms *s'*, the arms s^2, adapted to the slots of the arms *s'*, the rock-shaft *s*, having an arm, s^3, with segmental slot, and the shaft *n'*, having a crank-pin, n^3, adapted to said segmental slot, as set forth.

18. The combination of the plate *b* of the tube-forming device, with the bending-fingers *e* beneath the plate, and the spring-pressure roller *e'* above the same, whereby the tucks are confined and prevented from being drawn out by the action of the fingers *e* in forming the final folds of the tube, as specified.

In testimony whereof we have signed our names to this specification in the presence of two subscribing witnesses.

FELIX W. LEINBACH.
CLARENCE A. WOLLE.
EDWARD H. BRUNNER.

Witnesses:
FR. M. RAUCH,
E. B. CHANDLER.

(No Model.) 8 Sheets—Sheet 1.

F. W. LEINBACH, C. A. WOLLE & E. H. BRUNNER.

PAPER BAG MACHINE.

No. 327,280. Patented Sept. 29, 1885.

FIG. 1.

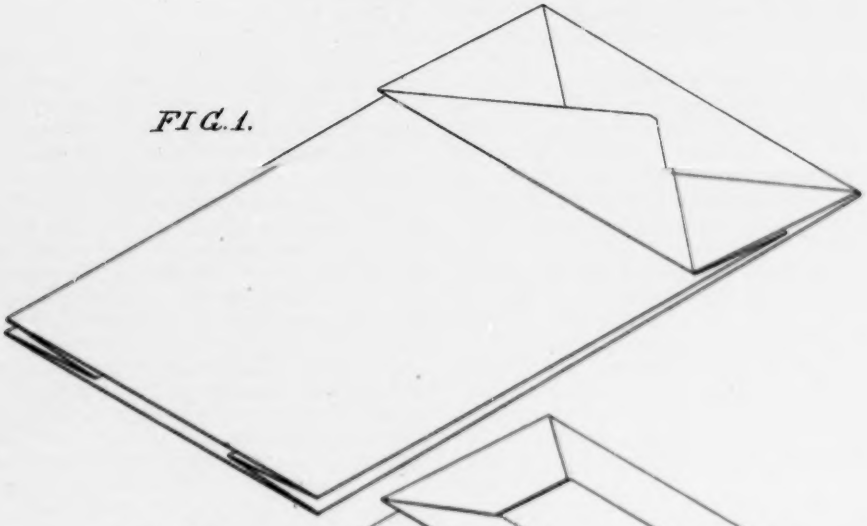

FIG. 2.

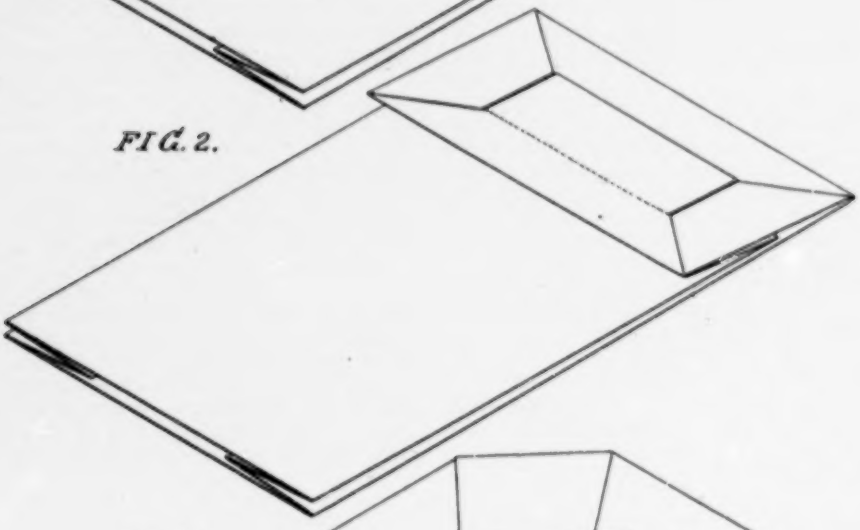

FIG. 3.

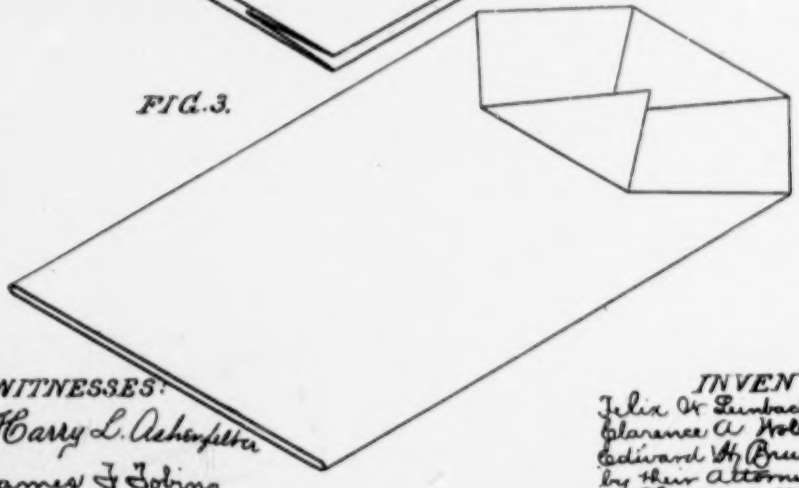

WITNESSES:
Harry L. Aschenfelter
James F. Jobing

INVENTOR:
Felix W. Leinbach
Clarence A. Wolle and
Edward H. Brunner
by their Attorneys
Howson & Sons

THE NORRIS PETERS CO., WASHINGTON, D. C.

(No Model.) 8 Sheets—Sheet 2.

F. W. LEINBACH, C. A. WOLLE & E. H. BRUNNER.

PAPER BAG MACHINE.

No. 327,280. Patented Sept. 29, 1885.

FIG. 4.

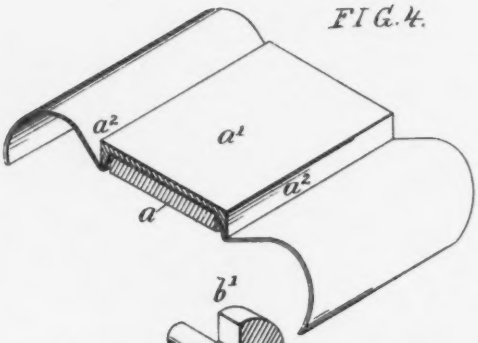

FIG. 5.

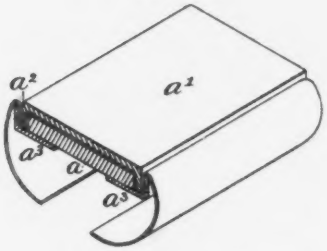

FIG. 6.

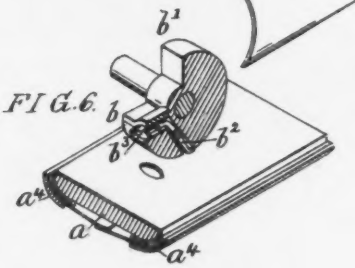

FIG. 7.

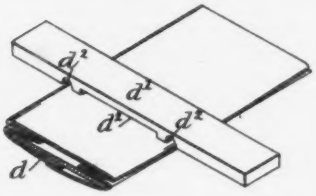

FIG. 8.

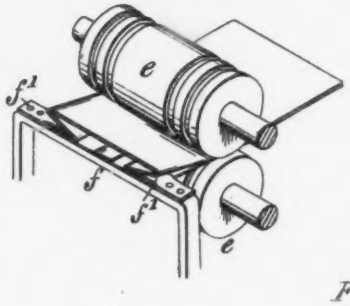

FIG. 9.

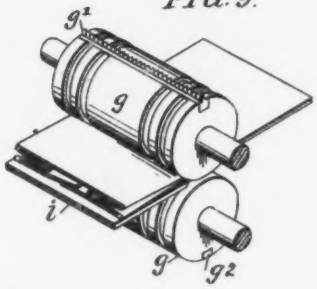

FIG. 32

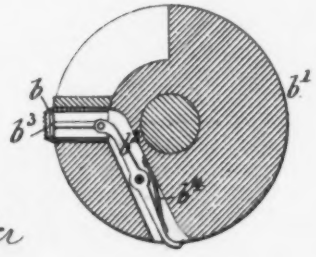

WITNESSES:

Harry L. Aukenfelter

James F. Johns

INVENTOR:

Felix W. Leinbach
Clarence A. Wolle
and Edward H. Brunner
by their Attorney
Howson & Sons

(No Model.) 8 Sheets—Sheet 3.

F. W. LEINBACH, C. A. WOLLE & E. H. BRUNNER.

PAPER BAG MACHINE.

No. 327,280. Patented Sept. 29, 1885.

FIG. 10.

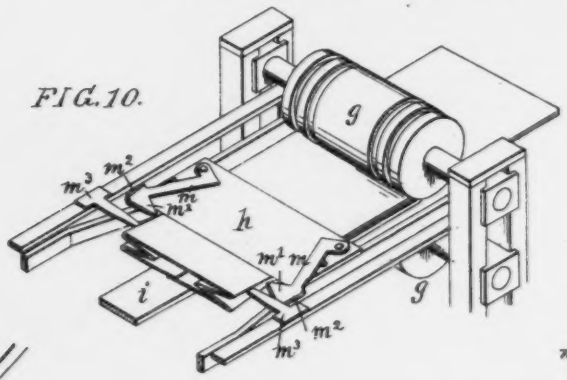

FIG. 10ª.

FIG. 10ᵇ.

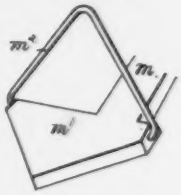

FIG. 11.

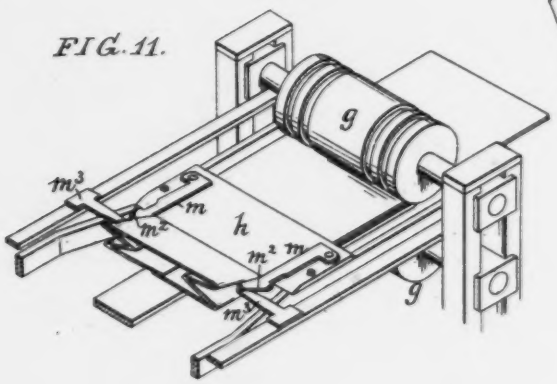

FIG. 12.

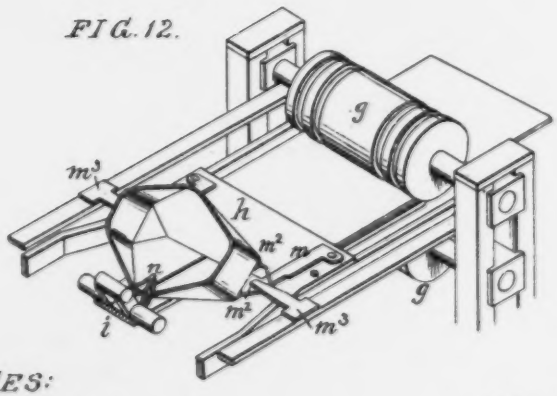

WITNESSES:

Harry L. Ashenfelter

James J. Johns

INVENTOR:

Felix W. Leinbach
Clarence A. Wolle
and Edward H. Brunner
by their Attorneys
Howson & Sons

(No Model.) 8 Sheets—Sheet 4.

F. W. LEINBACH, C. A. WOLLE & E. H. BRUNNER.

PAPER BAG MACHINE.

No. 327,280. Patented Sept. 29, 1885.

FIG. 13.

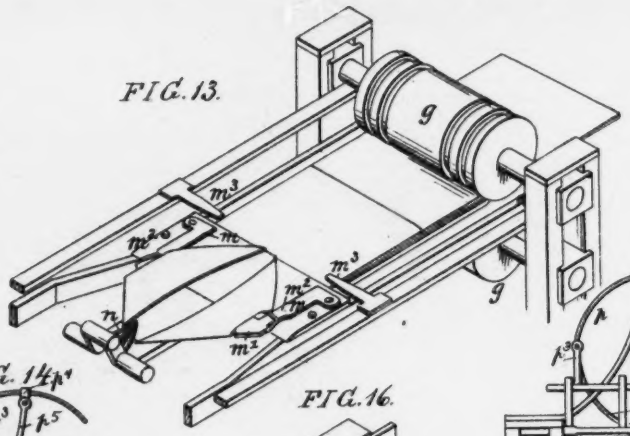

FIG. 15.

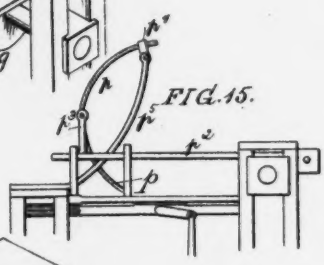

FIG. 14.

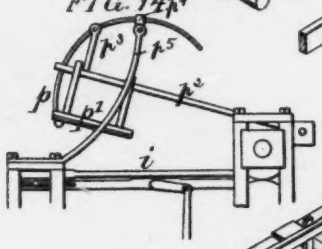

FIG. 16.

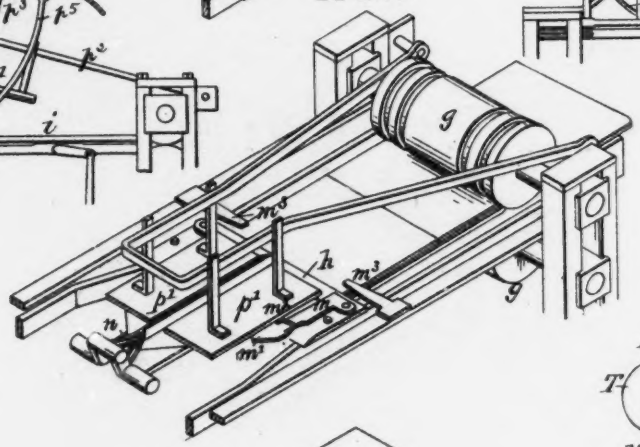

FIG. 18.

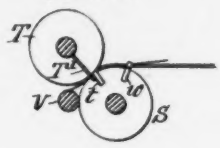

FIG. 17.

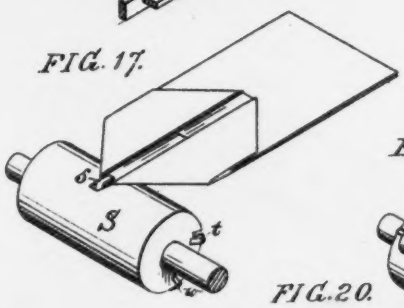

FIG. 19.

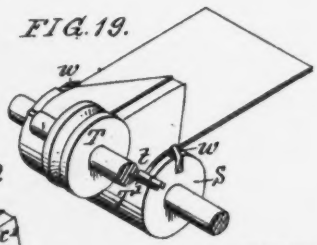

FIG. 20.

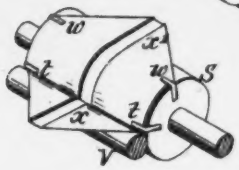

WITNESSES:

Harry L. Ashenfelter

James F. Johns

INVENTORS

Felix W. Leinbach

Clarence A. Wolle

and Edward H. Brunner

by their Attorneys

Howson & Sons

THE HARRIS PETERS CO., WASHINGTON, D. C.

(No Model.) 8 Sheets—Sheet 5.

F. W. LEINBACH, C. A. WOLLE & E. H. BRUNNER.

PAPER BAG MACHINE.

No. 327,280. Patented Sept. 29, 1885.

FIG. 21.

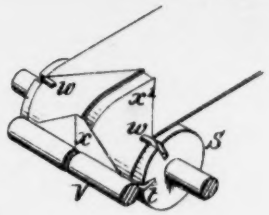

FIG. 22.

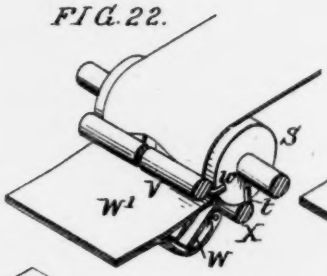

FIG. 26.

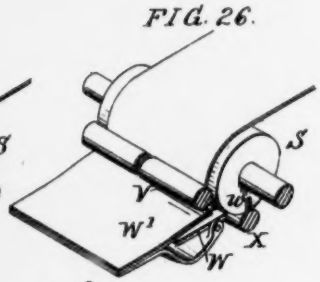

FIG. 24

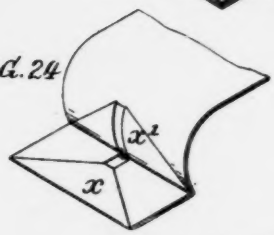

FIG. 25.

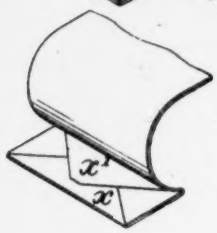

FIG. 23

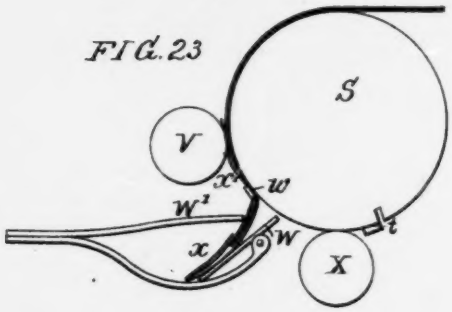

FIG. 27.

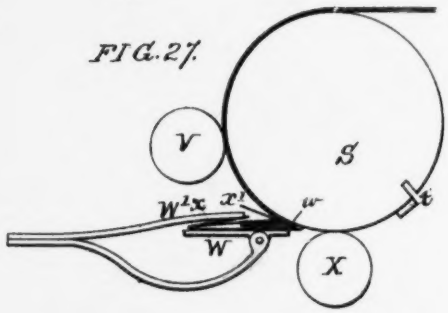

FIG. 27ª

WITNESSES:

Harry L. Ashenfelter

James F. Johns

INVENTORS.

Felix W. Leinbach
Clarence A. Wolle
and Edward H. Brunner
by their attorneys
Howson & Sons

THE NORRIS PETERS CO., WASHINGTON, D. C.

(No Model.) 8 Sheets—Sheet 6.

F. W. LEINBACH, C. A. WOLLE & E. H. BRUNNER.

PAPER BAG MACHINE.

No. 327,280. Patented Sept. 29, 1885.

FIG. 28.

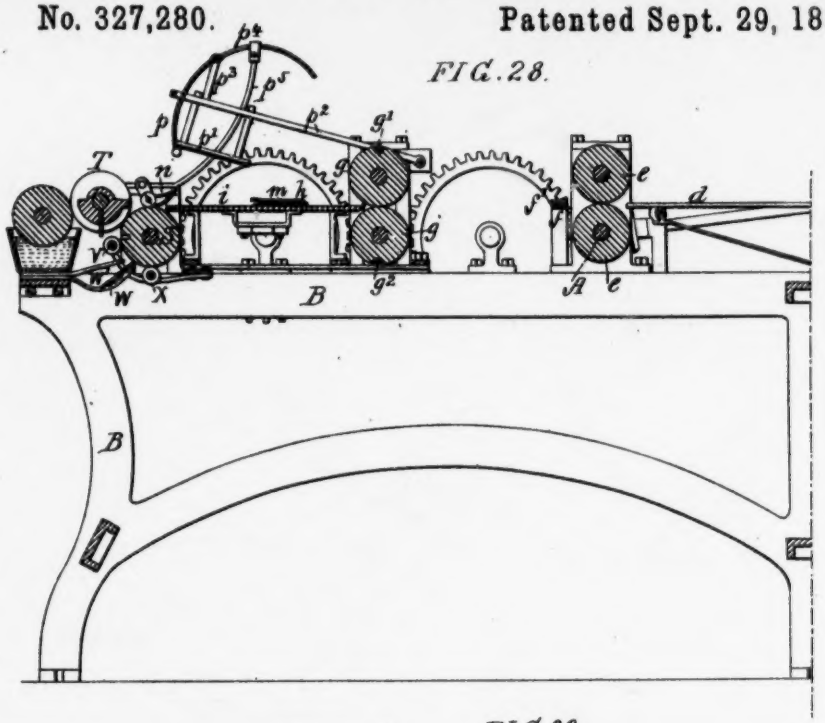

FIG. 29.

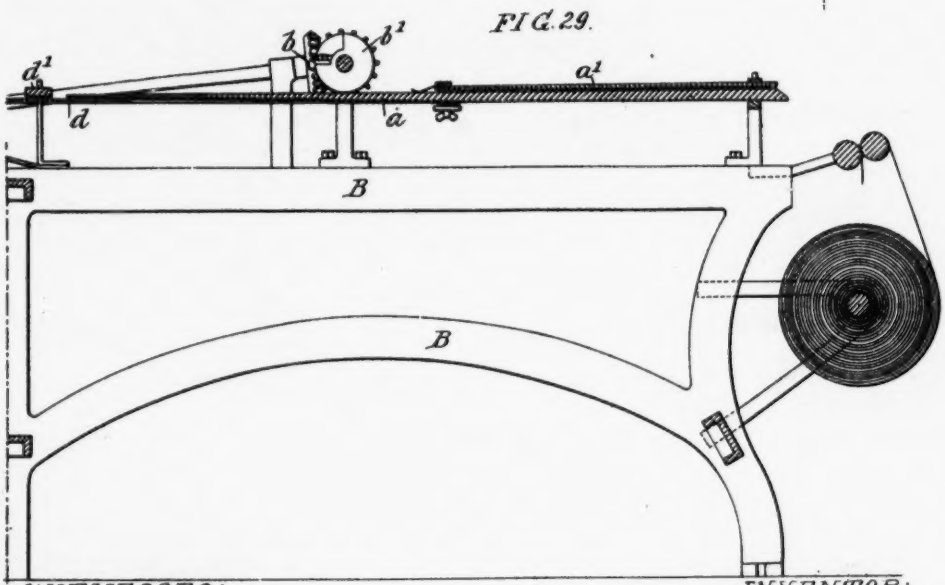

WITNESSES:

Harry L. Uehenfelter

James F. Johns

INVENTOR:

Felix W. Leinbach
Clarence A. Wolle
and Edward H. Brunner
by their Attorneys
Howson & Sons

THE NORRIS PETERS CO., WASHINGTON, D. C.

(No Model.) 8 Sheets—Sheet 7.

F. W. LEINBACH, C. A. WOLLE & E. H. BRUNNER.

PAPER BAG MACHINE.

No. 327,280. Patented Sept. 29, 1885.

FIG. 30

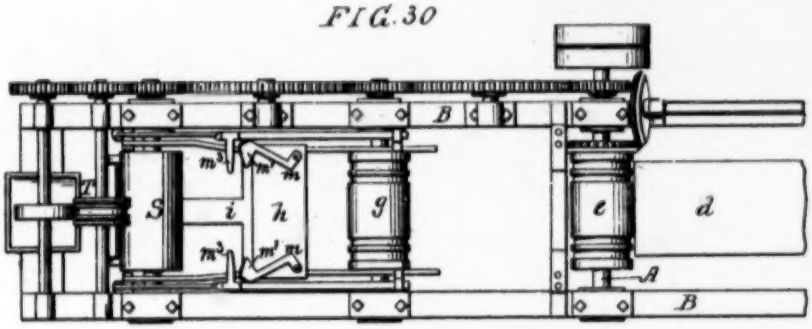

FIG. 31.

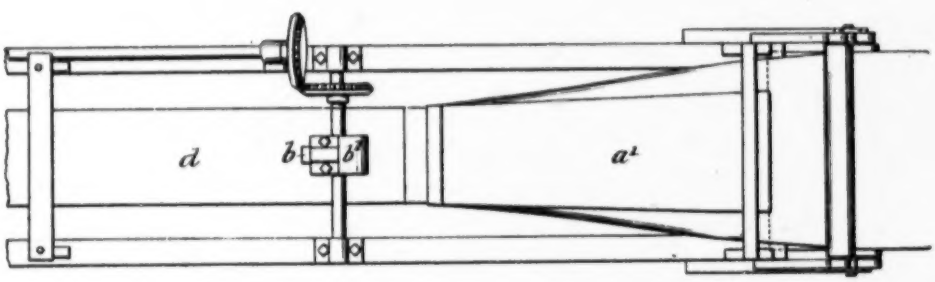

WITNESSES:
Harry L. Aschenfelter
James F. Johns

INVENTOR
Felix W. Leinbach,
Clarence A. Wolle
and Edward H. Brunner
by their Attorneys
Dawson & Sons

(No Model.) 8 Sheets—Sheet 8.

F. W. LEINBACH, C. A. WOLLE & E. H. BRUNNER.

PAPER BAG MACHINE.

No. 327,280. Patented Sept. 29, 1885.

FIG. 33.

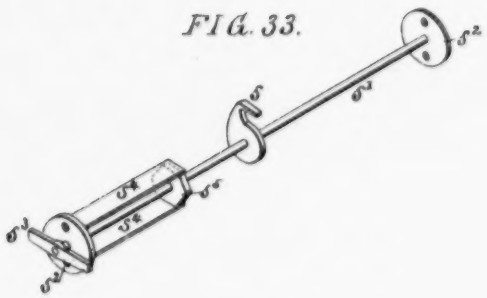

FIG. 34

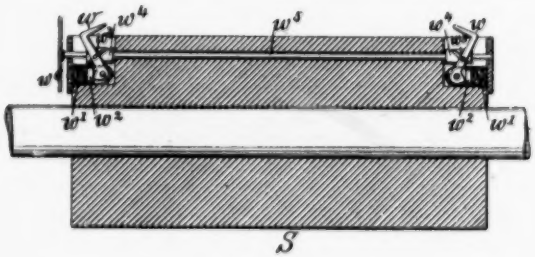

WITNESSES:

Harry L. Ashenfelter

James F. Jobin

INVENTOR:

Felix W. Leinbach
Clarence A. Wolle
and Edward H. Brunner
by their attorneys
Howson & Sons

UNITED STATES PATENT OFFICE.

FELIX W. LEINBACH, CLARENCE A. WOLLE, AND EDWARD H. BRUNNER, OF BETHLEHEM, PA., ASSIGNORS TO SAID LEINBACH AND WOLLE.

PAPER-BAG MACHINE.

SPECIFICATION forming part of Letters Patent No. 327,280, dated September 29, 1885.

Application filed July 2, 1883. (No model.)

To all whom it may concern:

Be it known that we, FELIX W. LEINBACH, CLARENCE A. WOLLE, and EDWARD H. BRUNNER, citizens of the United States, and residents of Bethlehem, Northampton county, Pennsylvania, have invented certain Improvements in Paper-Bag Machines, of which the following is a specification.

Our invention relates to certain improvements in machines for making satchel-bottomed paper bags, part of our improvements being based upon the Letters Patent No. 242,661, dated the 7th day of June, 1881.

In the accompanying drawings, Figs. 1, 2, and 3, Sheet 1, are views of different paper bags which can be produced by our machine. Figs. 4 to 27, Sheets 2, 3, 4, and 5, are diagrams illustrating the operations resorted to in forming the bag, only such parts of the machine being shown as are necessary for such illustration. Figs. 28 and 29, Sheet 6, show a longitudinal section of the machine; Figs. 30 and 31, Sheet 7, a plan view of the same with some of the parts removed; and Figs. 32, Sheet 2, and 33 and 34, Sheet 8, detached views of various parts of the machine, illustrating features of our invention.

The machine which we have shown in the drawings, and which we will describe in this specification, is adapted for the production of paper bags, such as shown in Figs. 1 and 2, these bags being made of tubes having an inward fold or tuck in each side. The machine can, however, with very slight change, be used for the production of ordinary satchel-bottomed bags made from plain tubes, as shown in Fig. 3. The devices for forming the tube with tucked-in sides from a sheet of paper differ somewhat in construction from those described in our former patent, but are similar in principle thereto, *a* being the plate over which the tube is formed, and *a'* the upper plate, having flanges a^2, which serve to form the V-shaped tuck in the paper, as shown in Fig. 4, this tuck being guided by a bent plate, a^3, and finally flattened and bent beneath the plate *a* by the action of a plate, a^4, Fig. 6, said plate also causing the lapping of the edges of the under layer of paper to complete the tube, one of said edges having been previously pasted, so that when pressure is applied to the overlapping fold the edges will be secured together.

A thumb-notch is cut in the upper ply of the tube by means of a cutter, *b*, of the proper shape, carried in the present instance by a rotating segment, *b'*. To prevent the clogging of this cutter, which is likely to take place, we use an ejector, which consists of a lever, b^2, adapted to a slot in the segment *b'* and pivoted to said segment. One arm of the lever is connected to a plunger, b^3, adapted to fit snugly, but slide freely, within the cutter *b*, this plunger being pressed inward by the action of a spring, b^4, on the lever b^2, Fig. 32, so as to cause the opposite end of the lever b^2 to project from the slot in the segment, whereby as the latter revolves the projecting end of the lever by contact with the tube is pressed inward, thus causing an outward movement of the plate b^3 and the ejection of the paper from the cutter. (See Fig. 6.) As the tube is drawn forward it leaves the former *a* and passes over a plate, *d*, the latter occupying a position between the lower folds of the tucks and the bottom ply of the tube, as shown in Fig. 7. This enables us to impart pressure to the tucks before the tube reaches the feed-rolls, such pressure being imparted by means of a bar, d', extending transversely across the tube and having recesses d^2, as shown in Fig. 7, so that while each tuck is subjected to pressure the upper fold and the inner or central fold of said tuck are not flattened, the object of this being to permit the proper action, at a subsequent stage of the operation, of a presser-plate for distending the mouth of the tube. For the same reason the feed-rolls *e*, Fig. 8, are grooved at points in line with the upper and inner folds of the tucks. It is advisable, however, to press the lower fold of the tuck so that the bottom lap of the tube will lie flat on the table or bed, and not interfere with the action of the side tuck-folders hereinafter described; hence we arrange adjacent to the feed-rolls *e* a bar, *f*, which carries spring-presser blades *f'*, which press upon and flatten the lower fold of the tuck as the tube is drawn forward. (See Fig. 8.) From the feed-rolls the tube passes to the severing-rolls *g*, Fig. 9, the upper of said rolls carrying a severing-knife, *g'*, and the lower roll having a yielding block, g^2, serving as a

cutting-bed for the knife, so that as the tube passes between the rollers it is cut into blanks of the proper length for the bags to be produced. The severing-rolls also serve to feed the tube, and are grooved for the same reason as the feed-rolls *e*.

From the severing-rolls the blank passes between the table *i* and presser-plate *h*, the latter being elevated until sufficient of the blank has passed beneath the same to form the bottom of the bag, when the plate is depressed, as shown in Fig. 10, so as to cause the gaping of the mouth of the blank, as described in our former patent.

Pivoted to the presser-plate *h* are arms *m*, the outer ends of which carry side tuck-folders substantially similar to those described in our former patent, and comprising a fixed plate, *m'*, and pivoted plate *m²*, the latter in the present instance being simply a skeleton plate of wire, instead of the solid plate formerly used. The construction of the side tuck folders will be understood on reference to the enlarged perspective views, Figs. 10ª and 10ᵇ.

When the plate *h* descends onto the blank, the arms *m* are in a retracted position, as shown in Fig. 10; but when the tucks have been opened by the gaping of the mouth of the blank the arms *m* are caused to move inward, so as to carry the folding-plates into the tucks, as shown in Fig. 11. The plate *h* after descending upon the blank moves forward with the same, and the plates *m²* are thus brought under the influence of fingers *m³* on the frame of the machine, and said plates are caused to turn backward, so that in conjunction with the plates *m'* they will form the internal triangular folds necessary to the production of a satchel-bottom on a bag with tucked sides. (See Fig. 12.)

The primary or diamond fold of the bag-bottom is also formed by the combined action of the presser-plate *h* and side tuck-folders, as said plate and folders continue to advance, as shown in Fig. 13. In our former machine we used, in addition to these elements, a longitudinally-reciprocating distending-rod, which we have now dispensed with, and rely upon the side folders to effect the necessary distention and formation of the diamond fold. In this case, however, we use a presser, *n*, Fig. 12, for holding down the lower ply of the blank and directing the same to a nipper hereinafter referred to, said presser acting upon the forward end of the diamond fold, as shown in Figs. 12 and 13.

It is also advisable to flatten down the rear end of the diamond fold after the latter has been formed by the action of the side folders, and for this purpose we use a rod, *p*, the point of which is carried rearward over the center of the fold, so as to press down that portion of the fold which is brought under its action. (See Figs. 14 and 15.) While this rod performs one of the duties of the distending-rod described in our former patent, we do not consider it the equivalent of said rod, as its action is simply a supplemental one, and is not essential to the formation of the diamond fold.

After the fold has been formed, it is further flattened by the action of the presser-plates *p'*, similar to those described in our Patent No. 242,661, and shown in Fig. 16. In this figure the presser-rod *p* and the means for operating the same have been omitted in order not to confuse the representation of the flattening-plates *p'*.

During these operations, it should be understood, the blank has been moving continually forward, and before the side folders had commenced to act the front end of the blank had been caught and held by a nipper, *s*, on a drum, S, Fig. 17, and as the latter rotates the blank is carried round by it, and the edges of the blank are acted upon in succession by nippers *t* and *w*, also carried by and moving with the drum, Fig. 18. These nippers *t* and *w* are so far apart, and the distance between them is such in relation to the dimensions of the diamond fold on the bag-blank, that the nippers *t* will define the limits of the first of the finishing flaps *x* of the bag-bottom, while the nippers *w* will define the limits of the last flap, *x'*, of the same.

As the blank is carried around the drum S, paste is deposited along the center of the diamond fold by means of a paste-roll, T, Fig. 18. As soon as the point of the diamond fold has passed beneath the paste-roll, it is released from the control of the nipper *s*, and is thrown out from the roll S by the action of a creasing-blade, T', carried by the shaft of the paste-roll and acting in conjunction with a recess in the roll S, this recess being immediately in advance of the nippers *t*, as shown in Fig. 19. The point of the diamond fold is thus thrown out over a roller, V, Fig. 20, and as the drum S continues to rotate the flap *x* is folded by the joint action of said roller and the drum S and its nippers *t*, as shown in Fig. 21. As soon as the nippers *t* have passed the roller V, they are retracted, so as to free from the control of the drum S all that portion of the partially-folded bottom in advance of the nippers *w*. As the drum S rotates this free projecting portion of the blank strikes a pivoted deflecting-plate, W, Figs. 22 and 23, and is thus thrown outward, as shown in Fig. 24, so that as the nippers *w* advance they will form the finishing fold *x'*, Fig. 25, the plate W yielding to permit this folding of the blank, as shown in Figs. 26 and 27. As the plate W swings upward that portion of the partially-formed bottom of the bag resting on said plate is brought into contact with a guard-plate, W', and the flap *x* is thereby pressed down and the secure fastening of the same insured. This guard-plate W' may, if desired, form part of the plate W, as shown in Fig. 27ª. The previously-folded portion of the bottom, with the final flap, are then drawn by the nippers *w* between the drum S and a roller, X, whereby

the final pressure is imparted and the formation of the bottom completed, the nippers being then retracted, so as to release the finished bag, which falls into a suitable receptacle or onto an endless belt, which conveys it to the drying-room.

On reference to Figs. 28, 29, 30, and 31 it will be observed that the various rollers and drums of the machine are driven from the main shaft A by means of spur and bevel gearing, the spindles of the various rollers and drums being adapted to suitable bearings on the frame B of the machine.

The presser-plate *h* and the arms *n*, carrying the side folders, are operated by means similar to those set forth in our former Patent No. 242,661; hence we have not considered it necessary to again illustrate or describe them in this application.

The pressers *p'* are carried by a pivoted frame, p^2, to a stud, p^3, on which is hung the rod *p*, the latter being curved, and the outer end of the same being free to slide in an eye, p^4, on a fixed bracket, p^5. When the frame p^2 is elevated, as shown in Fig. 14, the rod *p* is retracted, as shown; but as the said frame p^2 descends the relation of the stud p^3 to the eye p^4 is changed, and as the upper end of the rod *p* is controlled by said eye the rod is caused to turn on its pivot, so as to project the lower end of the rod, as shown in Fig. 15, and thus flatten out the rear point of the diamond fold.

The nipper *s* is constructed as shown in Fig. 33, being secured to a shaft, *s'*, which turns in bearings in plates s^2 on the ends of the drum S, the end of the shaft having an arm, s^3, which is acted upon by suitable cams on the frame of the machine, these cams serving to commence the opening or closing of the nipper, and the completion of the movement being effected by the action of springs s^4 on an angular plate, s^5, carried by the shaft.

The operation of the nippers *w* and *t* is effected by the means shown in Fig. 34. Each nipper is hung to the slotted end of a tube, *w'*, let into an opening in the end of the drum, the nippers working in slots in the drum. Each nipper has a V-shaped projection, which is acted upon by a spring-bolt, w^2, in the tube *w'*, and on each nipper is a pin, w^3, adapted to a cam-slot in a collar, w^4, secured to a shaft or spindle, w^5, which is adapted to bearings in end plates on the drum, and has a projecting end with an arm, w^6, for the action of cams on the frame, these cams, as in the case of the nipper *s*, serving to start the movement of the nippers in either direction, and the movement being completed by the action of the spring-bolts w^2 on the V-shaped projections of the nippers.

While these devices for operating the nippers are preferred, they are not essential to our invention, as various devices for causing the opening and closing of the nippers may be devised.

Other modifications of the finishing end of the machine may also be made within the scope of our invention. For instance, it is not essential that the deflecting-plate W should be used in every case, or that rollers V and X should be used for pressing down the folds *x* and *x'* of the bag-bottom, as rods or bars may be used in place of the rollers in some cases, and, instead of employing a drum, S, for carrying the nippers, the latter may be combined with an endless belt.

The machine shown and described is intended for the manufacture of a square-bottomed bag from a tube with tucked sides, such as shown in Figs. 1 and 2. The bag shown in Fig. 1 has the primary fold for the bottom of the usual diamond shape, but in making the bag Fig. 2, the tube has longitudinal incisions formed in it on each side of the center, so as to form quadrangular tongues, as shown at each point of the diamond fold.

In making an ordinary satchel-bottomed bag from a plain tube, the tube-forming devices shown will be replaced by a plain former, and the side tuck-folders will be removed or thrown out of action, the other parts remaining the same.

We claim as our invention—

1. The combination of a rotating drum or segment having a cutter, *b*, and slotted as described, with the pivoted ejector-lever b^2, as set forth.

2. The combination of the plate *d* with the presser-bar *d'*, having recesses d^2, whereby pressure of the upper and inner folds of the tuck of the tube is prevented, as set forth.

3. The combination of mechanism, substantially as described, for forming a tube with tucked sides, with feed-rolls, recessed as described, whereby the upper and inner folds of the tucks are relieved from pressure, as set forth.

4. The combination of feed-rolls, recessed as described, so as to feed the tucked tube without pressing the edges of the folds, with presser-plates *f'*, whereby the lower folds of the said tucks are flattened at the edges without affecting the upper folds, as set forth.

5. As a means of forming the primary or diamond fold on a tube with tucked sides, the combination of the transverse presser-plate with side tuck-folders, operating, as described, to fold back the upper ply of the tube, as set forth.

6. The combination of the presser-plate and side tuck-folders with the guide *n*, for the forward end of the diamond fold, as specified.

7. The combination of the presser *p'* with the rod *p*, actuated by and in advance of the said presser *p'*, as set forth.

8. The combination of a bag-blank carrier with laterally-operating edge-nippers *t* for determining the line of fold of the flap *x*, and with a creasing-blade, as set forth.

9. The combination, in a paper-bag machine, of mechanism for forming the primary or diamond fold of the bag-bottom, with fold-completing mechanism comprising the following

elements: a drum, S, edge-nippers *t* and *w* thereon, mechanism for operating said nippers, a deflector, V, located as described, so as to press the advance point of the diamond over the nippers *t* and onto the body, and a deflector, W, located as described, whereby it folds the portion of the bottom in advance of the nippers *w* back over the latter and onto the rear point of the diamond, as set forth.

10. The combination of the bag-blank carrier, edge-nippers for determining the line of fold of the final flap *x'*, a deflector, W, and a presser, X, as set forth.

11. The combination of the bag-blank carrier and its nippers with the deflector W and guard-plate W', as set forth.

12. The combination of the drum, edge-nippers *w*, and presser X, with the pivoted deflecting-plate W, as set forth.

13. The combination of the drum S with the nippers *t* and *w*, pivoted in slots in said drum, the cam-collars *w'*, adapted to act upon pins on said nippers, and spring-plates *w²* acting on the nippers to complete the closing of the same.

In testimony whereof we have signed our names to this specification in the presence of two subscribing witness.

FELIX W. LEINBACH.
CLARENCE A. WOLLE.
EDWARD H. BRUNNER.

Witnesses.
WM. S. SIEGER,
FR. M. RAUCH.

(No Model.) 10 Sheets—Sheet 1.

W. A. LORENZ & W. H. HONISS.

PAPER BAG MACHINE.

No. 331,722. Patented Dec. 1, 1885.

Fig. 1.

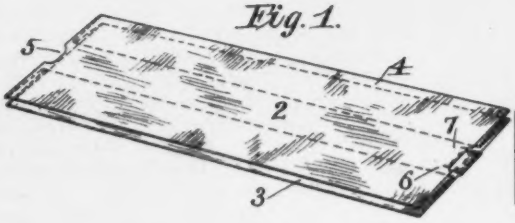

Fig. 8.

Fig. 2.

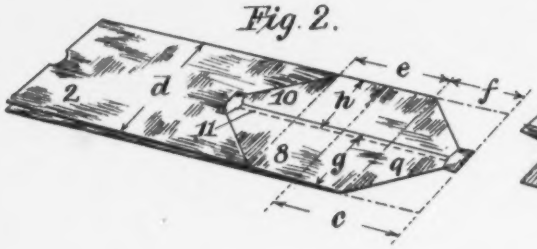

Fig. 7.

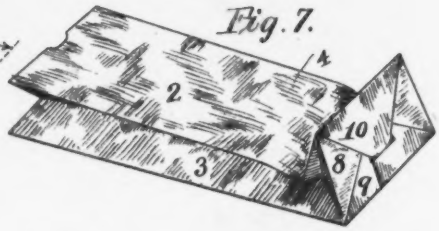

Fig. 3.

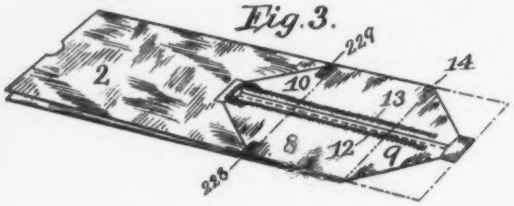

Fig. 6.

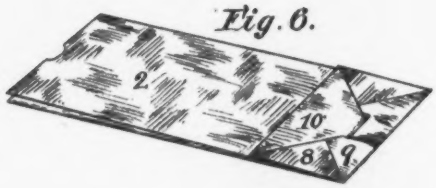

Fig. 4.

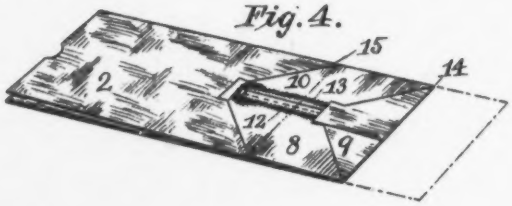

Fig. 5.

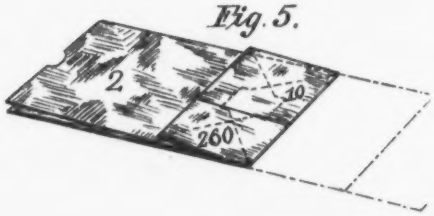

Witnesses:
Albert H. Walker
Morgan W Beach

Inventors:
William A. Lorenz
William H Honiss.

THE HOBBS PETERS CO. PHOTO-LITHO., WASHINGTON, D. C.

(No Model.) 10 Sheets—Sheet 2.

W. A. LORENZ & W. H. HONISS.

PAPER BAG MACHINE.

No. 331,722. Patented Dec. 1, 1885.

Fig. 9.

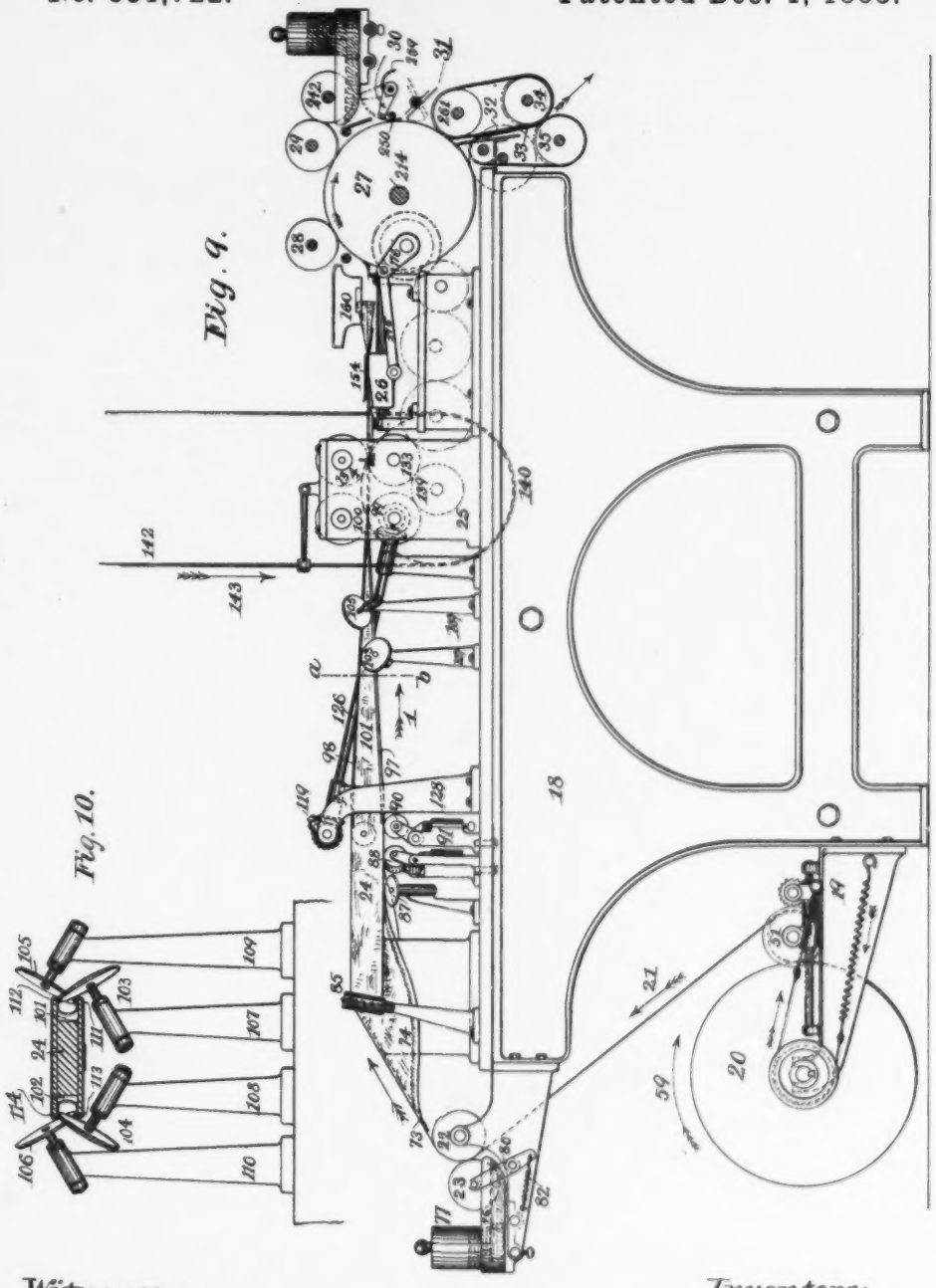

Fig. 10.

Witnesses:
Albert H. Walker
Morgan W. Beach

Inventors:
William A. Lorenz.
William H. Honiss.

(No Model.) 10 Sheets—Sheet 3.

W. A. LORENZ & W. H. HONISS.

PAPER BAG MACHINE.

No. 331,722. Patented Dec. 1, 1885.

Fig. 14.

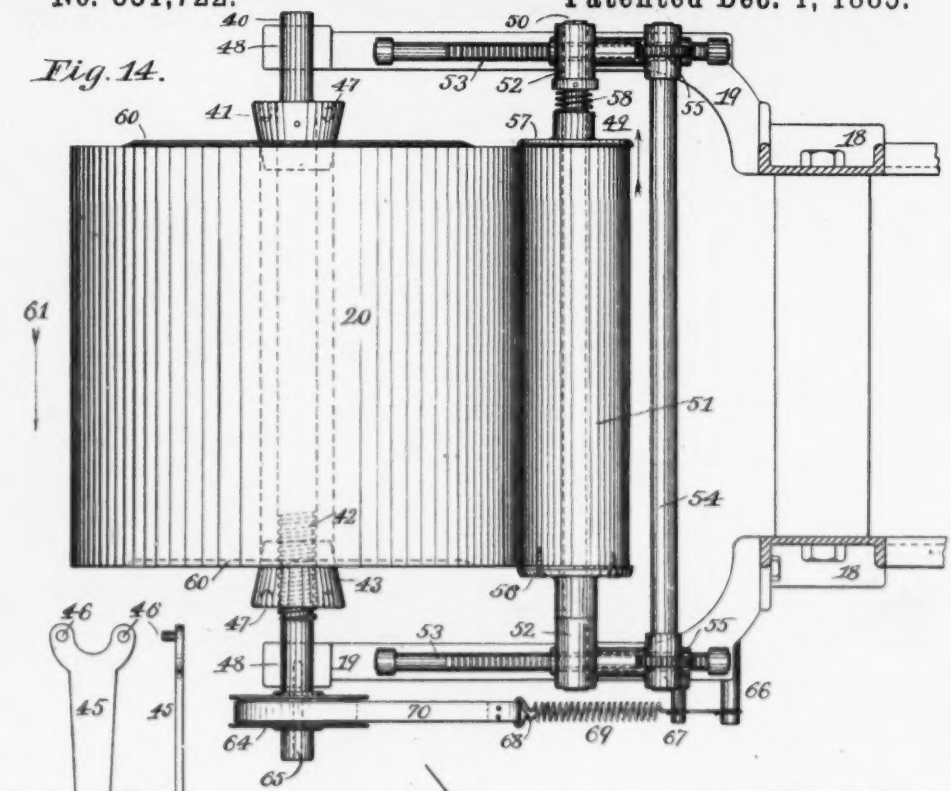

Fig. 11. Fig. 12.

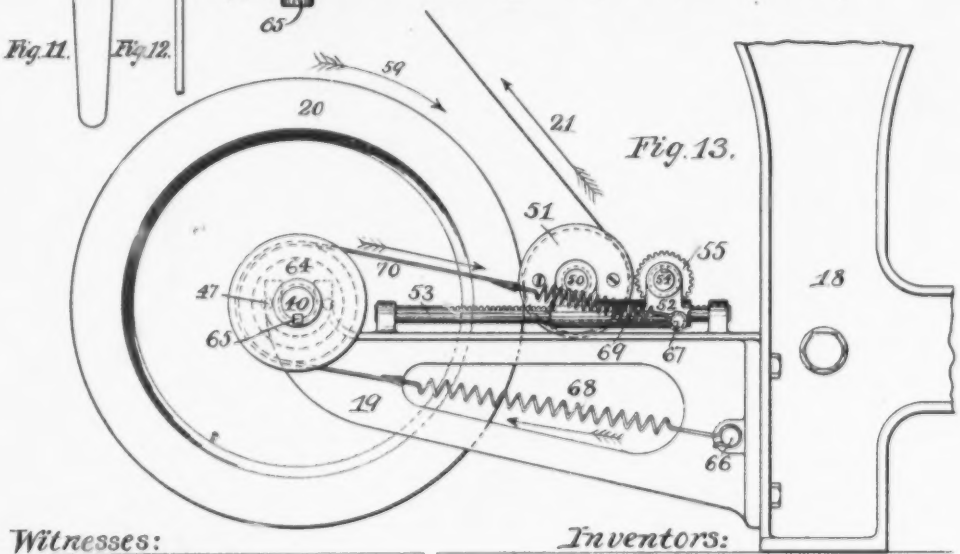

Fig. 13.

Witnesses:
Albert H. Walker
Morgan W. Bach

Inventors:
William A. Lorenz
William H. Honiss.

THE NORRIS PETERS CO. PHOTO-LITHO. WASHINGTON D. C.

(No Model.) 10 Sheets—Sheet 4.

W. A. LORENZ & W. H. HONISS.

PAPER BAG MACHINE.

No. 331,722. Patented Dec. 1, 1885.

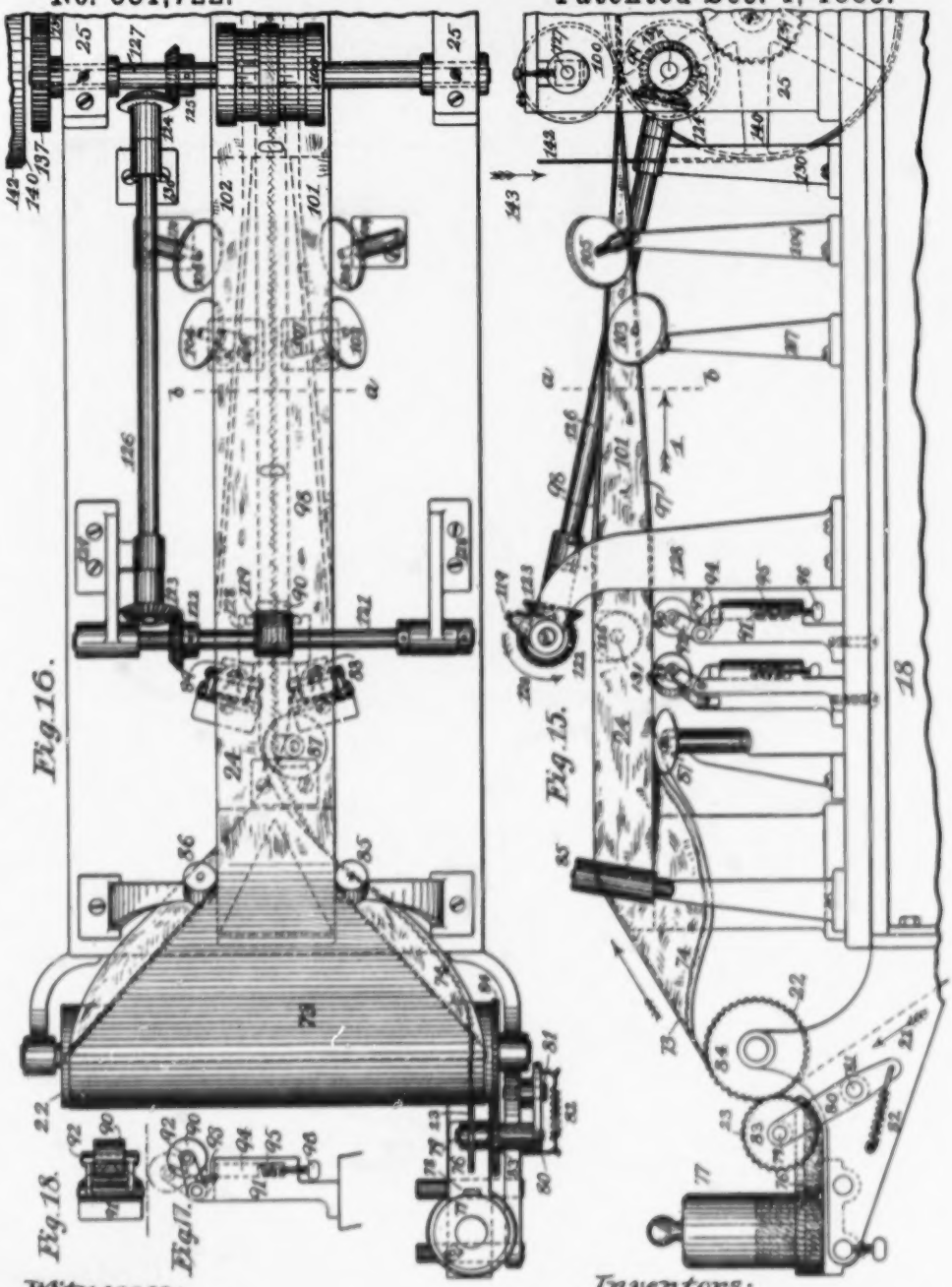

Fig. 16.

Fig. 15.

Fig. 18.

Fig. 17.

Witnesses:
Albert H. Walker
Morgan W. Beach

Inventors:
William A. Lorenz.
William H. Honiss.

(No Model.) 10 Sheets—Sheet 5

W. A. LORENZ & W. H. HONISS.

PAPER BAG MACHINE.

No. 331,722. Patented Dec. 1, 1885.

Fig. 20.

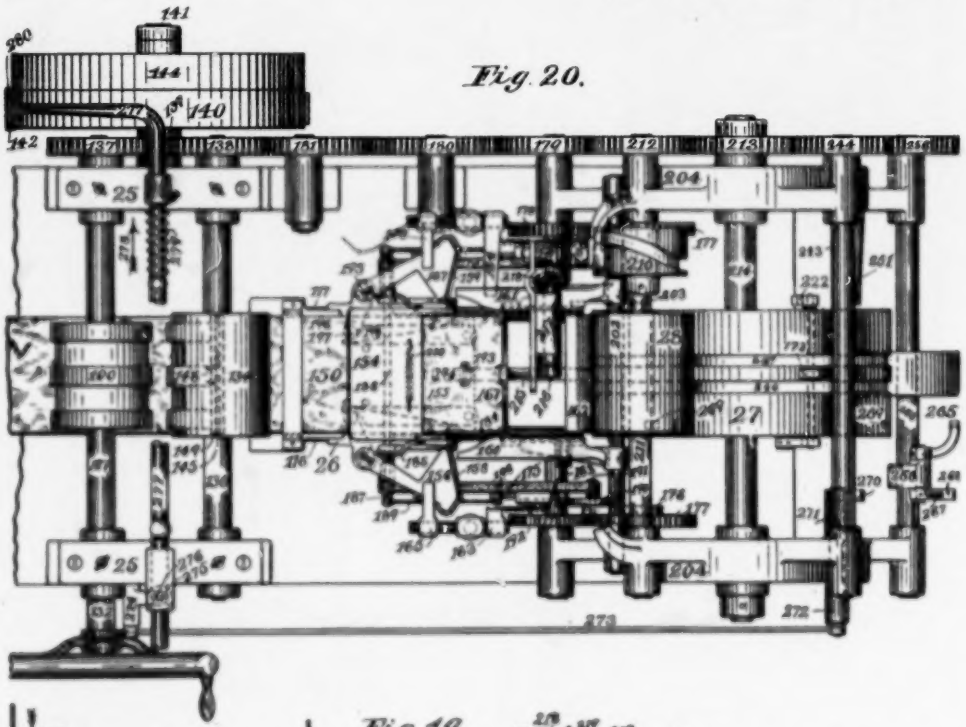

Fig. 19.

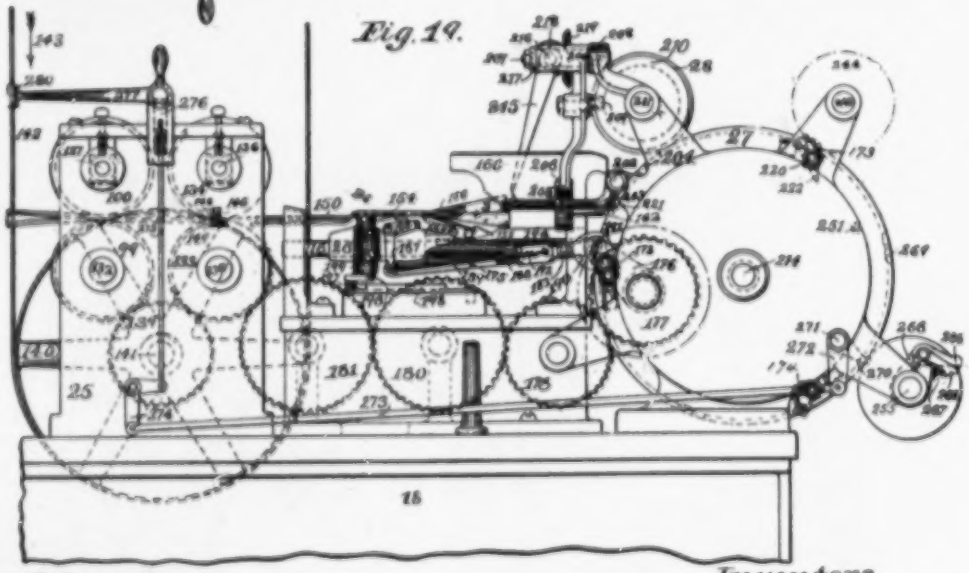

Witnesses:
Albert H. Walker
Morgan W. Beach

Inventors.
William A. Lorenz.
William H. Honiss.

(No Model.) 10 Sheets—Sheet 6.

W. A. LORENZ & W. H. HONISS.

PAPER BAG MACHINE.

No. 331,722. Patented Dec. 1, 1885.

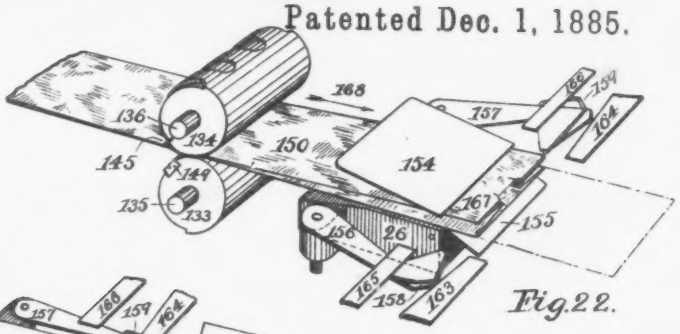

Fig. 22.

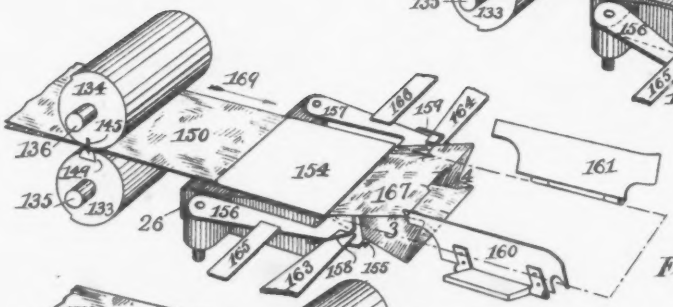

Fig. 23.

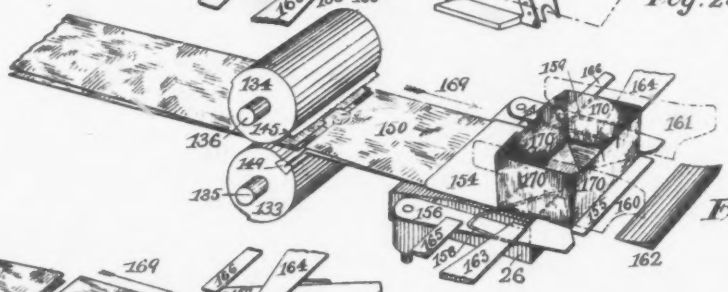

Fig. 24.

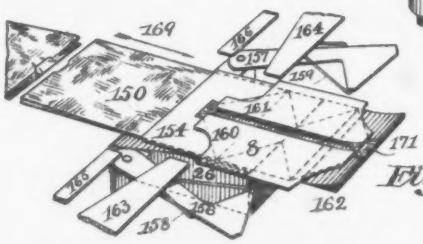

Fig. 25.

Fig. 28.

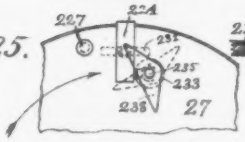

Fig. 29.

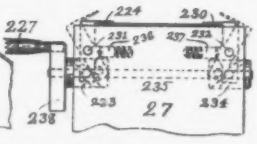

Fig. 21.

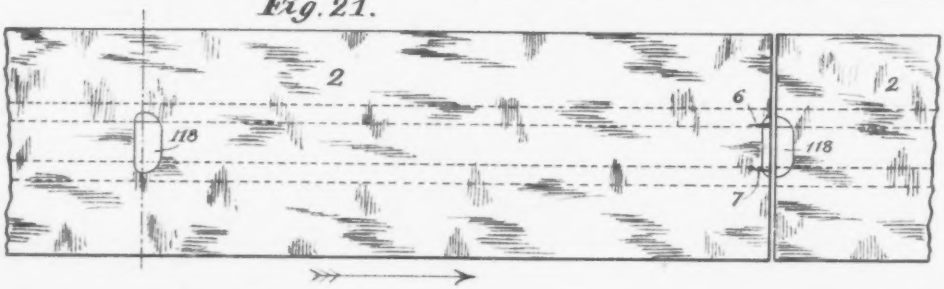

Witnesses:
Albert H. Walker
Morgan W. Beach

Inventors:
William A. Lorenz.
William H. Honiss.

(No Model.) 10 Sheets—Sheet 7.

W. A. LORENZ & W. H. HONISS.

PAPER BAG MACHINE.

No. 331,722. Patented Dec. 1, 1885.

Fig. 26.

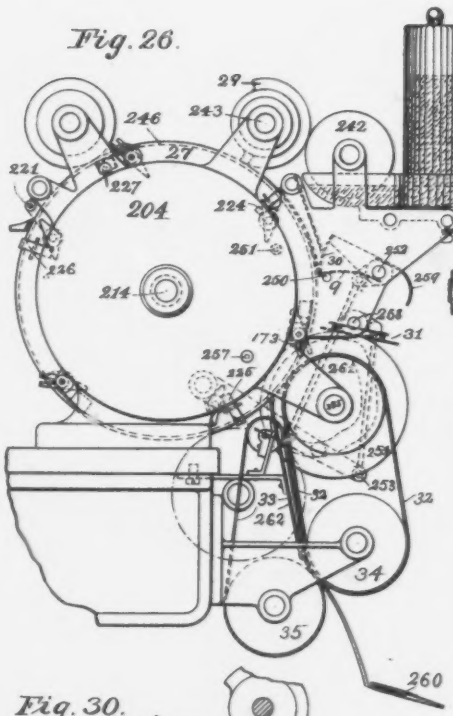

Fig. 27.

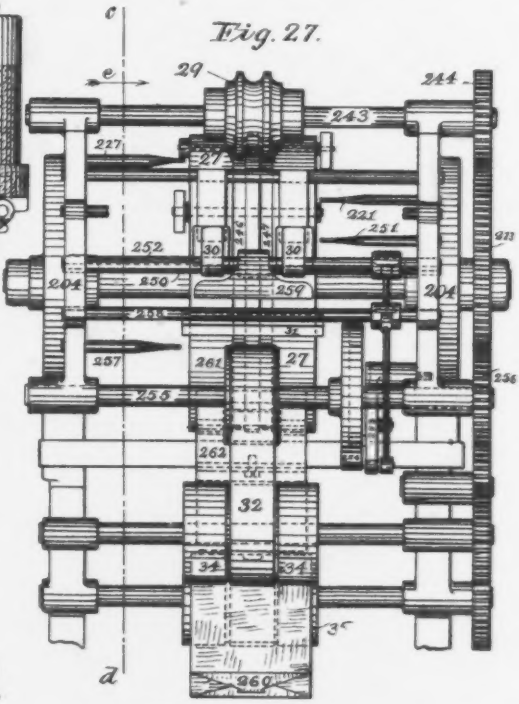

Fig. 30.

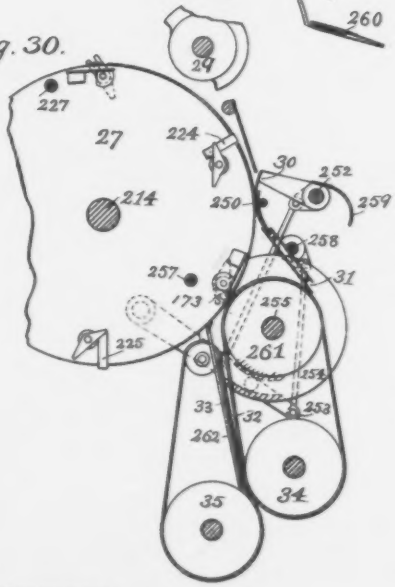

Fig. 31.

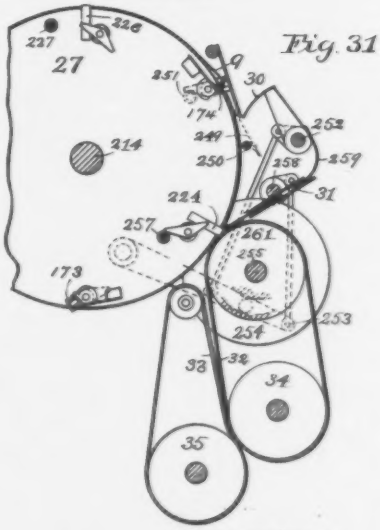

Witnesses:
Albert H. Walker
Morgan W. Beach

Inventors:
William A. Lorenz.
William H. Honiss

(No Model.) 10 Sheets—Sheet 8.

W. A. LORENZ & W. H. HONISS.

PAPER BAG MACHINE.

No. 331,722. Patented Dec. 1, 1885.

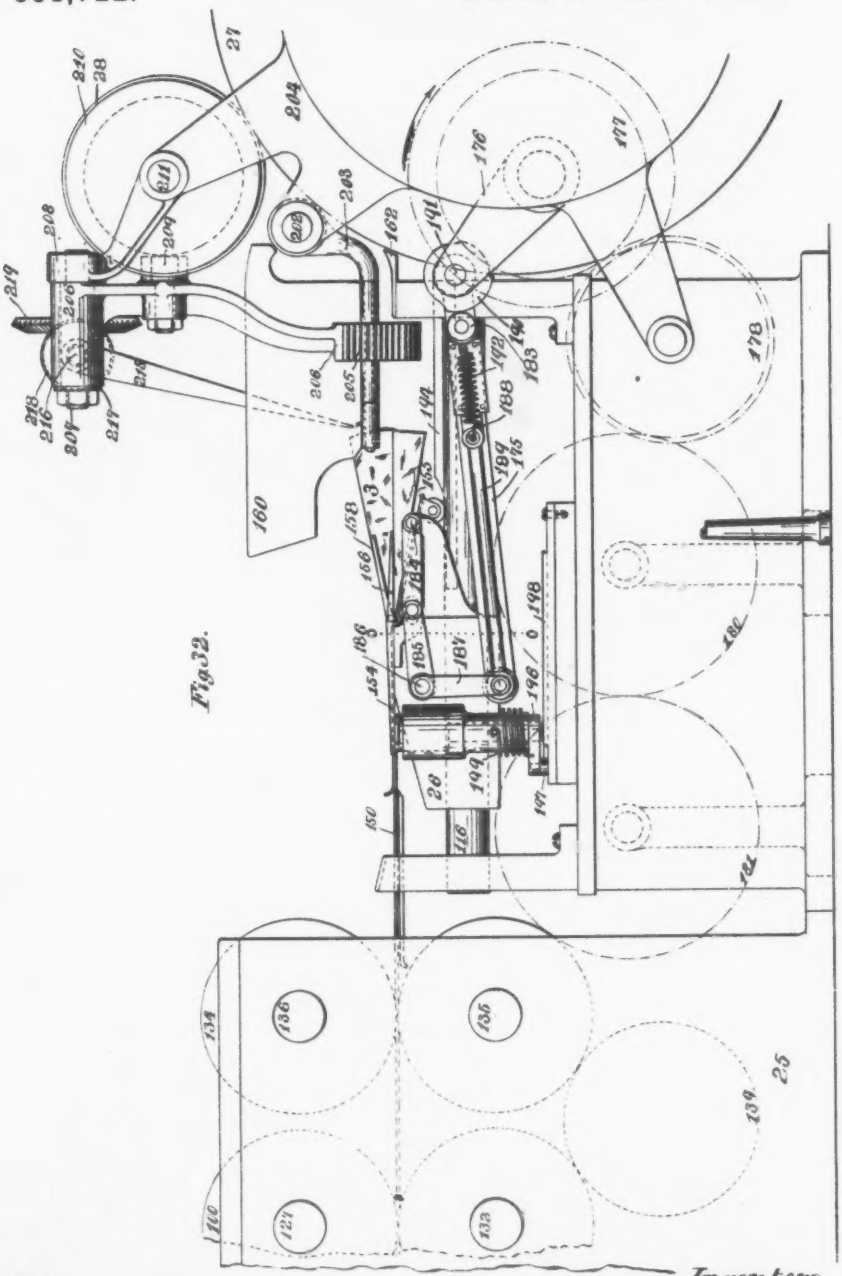

Fig. 32.

Witnesses:
Edward E. Chassen
Henry T. Brück

Inventors:
William A. Lorenz.
William H. Honiss.

(No Model.) 10 Sheets—Sheet 9.

W. A. LORENZ & W. H. HONISS.

PAPER BAG MACHINE.

No. 331,722. Patented Dec. 1, 1885.

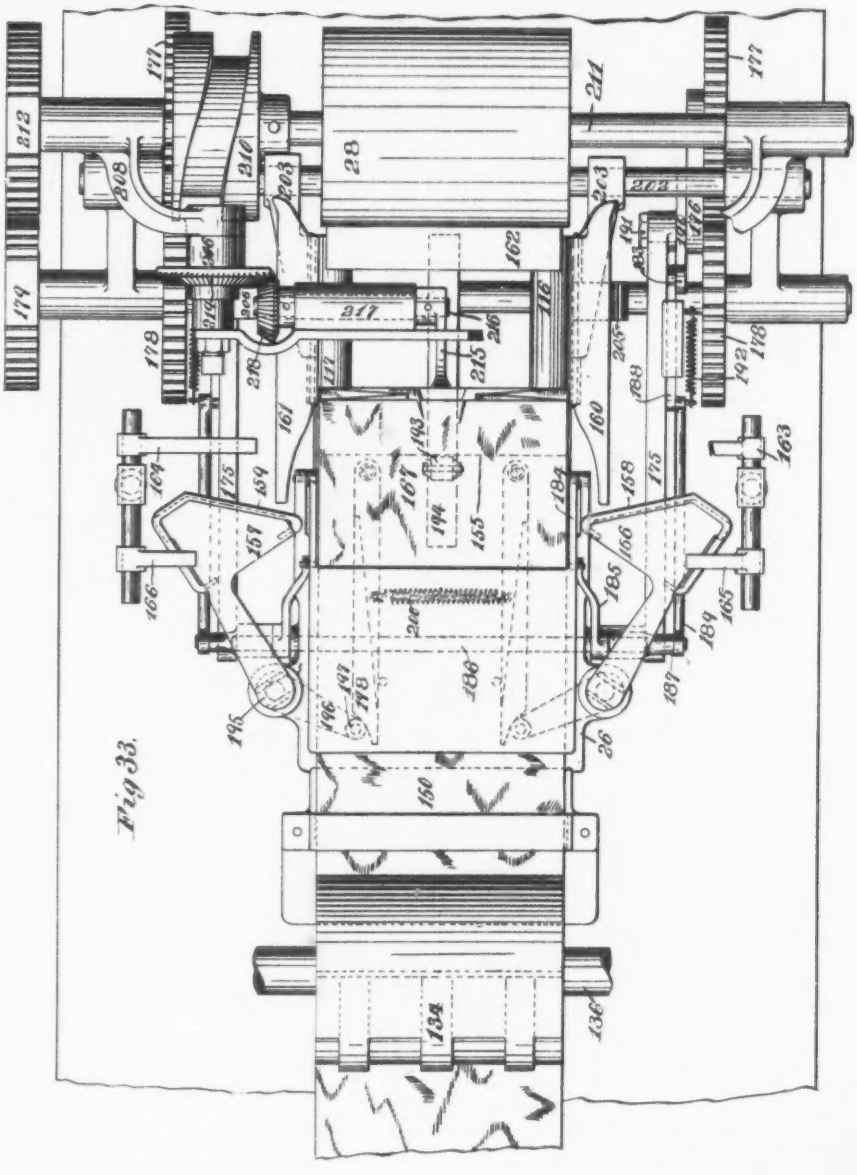

Fig 33.

Witnesses:
Edward C. Claussen
Henry T. Brück

Inventors:
William A. Lorenz
William H. Honiss

(No Model.) 10 Sheets—Sheet 10.

W. A. LORENZ & W. H. HONISS.

PAPER BAG MACHINE.

No. 331,722. Patented Dec. 1, 1885.

Fig. 35.

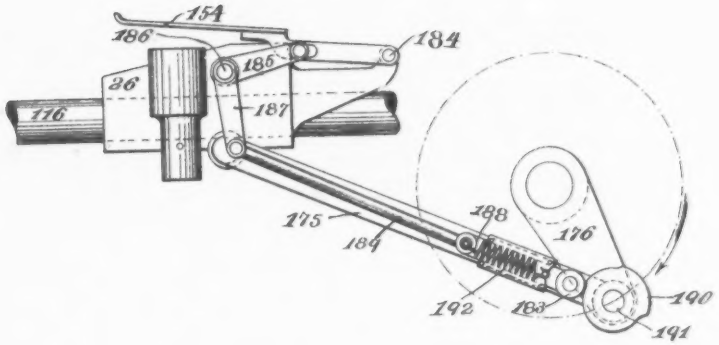

Fig. 34.

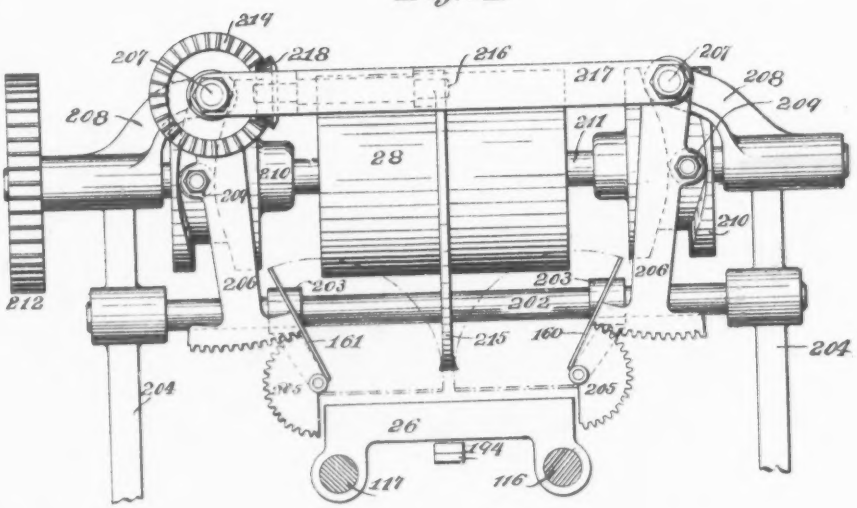

Witnesses:
Edward C. Clausner
Henry T. Brick

Inventors:
William A. Lorenz.
William H. Honiss.

UNITED STATES PATENT OFFICE.

WILLIAM A. LORENZ AND WILLIAM H. HONISS, OF HARTFORD, CONNECTICUT, ASSIGNORS TO FELIX W. LEINBACH AND CLARENCE A. WOLLE, BOTH OF BETHLEHEM, PENNSYLVANIA.

PAPER-BAG MACHINE.

SPECIFICATION forming part of Letters Patent No. 331,722, dated December 1, 1885.

Application filed May 15, 1884. Serial No. 131,661. (No model.)

To all whom it may concern:

Be it known that we, WILLIAM A. LORENZ and WILLIAM H. HONISS, of Hartford, Connecticut, have jointly invented a certain new and useful Paper-Bag Machine, of which the following description and claims constitute the specification, and which is illustrated by the accompanying ten sheets of drawings.

This machine automatically manufactures square-bottomed paper bags from a continuous roll of paper, and is capable of working at a high rate of speed.

Figure 1, on Sheet 1 of the drawings, is a perspective view of a length of tucked-paper tube manufactured by this machine, and called by us a "blank." Figs. 2 to 6, inclusive, on the same sheet, are perspective views of a series of transformations which the blank undergoes in being made by the machine into the completed bag shown in Fig. 6. Figs. 7 and 8, on the same sheet, represent the stages of unfolding and opening out the bag to the form shown in perspective in Fig. 8. Fig. 9, on Sheet 2, is a side view of the machine in its general aspect, but with a number of details omitted for the sake of clearness. Fig. 10, Sheet 2, includes a cross-section, looking to the right, on line *a b* of Fig. 9, and also includes a view, looking in the same direction, of the tuck-forming rolls. Figs. 11 and 12, Sheet 3, show two views of a spanner-wrench. Fig. 13, Sheet 3, represents an enlarged view of the centralizing device of the machine. Fig. 14, Sheet 3, is a plan of the same. Fig. 15, Sheet 4, represents an enlarged view of the tube-former of the machine. Fig. 16, same sheet, is a plan of the same. Figs. 17 and 18, Sheet 4, are detached views of one of the former-rolls. Fig. 19, Sheet 5, represents a side view of the drawing and cutting rolls, carriage, and stop-motion, upon an enlarged scale. Fig. 20, Sheet 5, is a plan of the same. Fig. 21, Sheet 6, is a plan of the paper tube, showing the severing, notching, and slitting of the tube. Figs. 22, 23, 24, and 25, Sheet 6, show perspective views of the first steps in folding the the bottom of the bag, which bottom we call the "diamond." Fig. 26, Sheet 7, represents a side view of the cylinder, paster arrangements, flap-folding motions, and delivery. Fig. 27, same sheet, shows a front view of the same. Fig. 28, Sheet 6, shows an enlarged view, being a side view, of the side grippers on the cylinder. Fig. 29, same sheet, shows a front view of the same. Figs. 30 and 31, Sheet 7, show sectional views of the flap-folding motions, with the cylinder and the delivery made on the line *c d*, Fig. 27, Sheet 7, looking in the direction of the arrow *e*. Fig. 32 is an enlarged view of part of Fig. 19, and Fig. 33 is a plan of the same. Fig. 34 is a view of the side-folder motion, looking to the right from the dotted line *o o* in Fig. 32. Fig. 35 is a side view of the presser-plate motion.

Similar figures refer to similar parts throughout the several views.

In order to explain the several operations required of this machine, we will first describe, by means of Figs. 1 to 8, inclusive, on Sheet 1, how the bag is constructed and how it appears when finished.

The paper, having been drawn from a continuous roll, is passed over a former, and by mechanism to be hereinafter described it is shaped and pasted into a continuous tube, 2, Fig. 1, Sheet 1, having two inwardly-reaching tucks, 3 and 4. This tube 2 is passed through drawing and cutting rolls, and is severed by the latter to the required length, as shown in Fig. 1, which length is termed a "blank." This blank has a notch, 5, cut at one end, and slits 6 and 7, made in the other end, the notch 5 being for the purpose of conveniently opening the bag after completion, and the slits 6 and 7 to facilitate certain operations of folding.

Fig. 2, Sheet 1, represents the blank 2, with one end folded into the diamond 8. The operation of folding this diamond 8 from a portion of the blank 2 equal to that indicated by *c* is fully described hereinafter. The diamond 8 is, in reality, truncated, forming two pointed ends, 9 and 10, which we call "flaps." The length of the flaps, as indicated by *f*, is equal in length to that part of the diamond 8 which is folded down flat upon the blank 2, as indicated by *g* and *h*, and these lengths are a little more than one-half of the width *d* of the blank 2, which causes the edges of the paper to lap over one another, as shown at 11. This lapping over is done to prevent paste entering the bag, and to produce a smooth inside.

In Fig. 3, Sheet 1, the blank 2 is shown with the diamond 8 folded, and on the diamond are placed two lines of paste, 12 and 13. After this the first flap, 9, is folded at the line 14 back upon the diamond 8, as shown in Fig. 4, Sheet 1. The next operation consists in folding the flap 9, together with the diamond 8 and part of the blank 2 at the line 15, back upon the flap 10, as shown in Fig. 5, Sheet 1. In this position the bottom is passed between rollers and pressed, so that the flaps 9 and 10 will be held down by the paste, when the bottom of the bag is turned over from the position in Fig. 5 to that in Fig. 6, Sheet 1, in which latter position the bag is delivered to the drying mechanism. (Not shown in this application.) The bag is then complete, and is shown partly opened up in Fig. 7, and fully opened up in Fig. 8, Sheet 1.

Having described the bag and the operations of folding, we will now describe the machine.

Fig. 9, Sheet 2, shows a general side view of the machine, omitting many points of detail for the sake of clearness.

In subsequent figures we show the various portions of the machine in detail, and give complete views of each portion.

In Fig. 9, Sheet 2, 18 represents the frame of the machine, to which are attached various brackets, &c. A bracket, 19, is bolted to the lower part, holding the centralizing device and tension-regulator for the paper roll 20, which is fully described hereinafter. The paper passes from the centralizer in the direction 21, and around a guide-roll, 22, receiving a line of paste at one edge from the paste-roll 23. Then, passing upon the former 24, the paper is folded into a continuous tucked tube, (a length cut from which is shown in Fig. 1, Sheet 1,) by mechanism to be hereinafter fully described. Passing thence between the drawing and cutting rolls in frame-work 25, the tube is severed and delivered to a carriage, 26, driven by crank-motion. While held by the carriage the diamond is folded. (See Fig. 2, Sheet 1.) Then it is delivered to a cylinder, 27, and is pressed flat by a roll, 28. Then the paste is laid upon the diamond by a paste-roll, 29. Then the first flap is folded (see Fig. 4, Sheet 1) by a folder, 30. Then the bag enters a rocking box, 31, which doubles up the bag. (See Fig. 5, Sheet 1.) Then the bag passes between tapes 32 and 33, and is pressed between rolls 34 and 35, after which the bag is passed to a drier. (Not shown.)

We will now proceed to describe the various parts of the machine in detail.

First. *The paper-roll-holding device.*—This consists of a shaft, 40, Figs. 13 and 14, Sheet 3, upon which is pinned a cone, 41, near one end. Near the other end a screw thread, 42, is cut on the shaft, and a second cone, 43, is fitted to this thread. In order to put a roll of paper, 20, on the cones, cone 43 is unscrewed. The shaft 40 is passed through the center of the roll. The cone is replaced and then screwed upon the shaft until the paper roll 20 is held sufficiently tight. This is done by two spanner-wrenches, 45, Figs. 11 and 12, Sheet 3, whose pins 46 46 enter holes 47 47 in the cones 41 and 43. The roll, shaft, and cones are then lifted into journals 48 48 in brackets 19 19.

Second. *The centralizing device.*—This device serves the purpose of guiding the paper from the roll 20, Figs. 13 and 14, Sheet 3, to the tube former centrally, so that the paper shall lap together evenly, and thus avoid all tendency to run off the former. The centralizer consists of a roller, 51, on a shaft, 50, that is supported in bearings in slides 52 52. The latter slide upon rack-shafts 53 53, that are fixed upon brackets 19 19. The roller 51 is free to revolve with the shaft 50, and it can move backward and forward against the roll of paper 20. In order to keep the axis of the roller 51 parallel to that of the shaft 40 at all times, a secondary shaft, 54, is journaled in slides 52 52. Upon that shaft are keyed two pinions, 55 55, that engage with the racks 53 53. This arrangement of racks and pinions keeps the slides 52 52 always opposite one another, and thus holds the roller 51 parallel to the shaft 40. The roller 51 has two flanges, one, 56, being fixed to the roller, and one, 57, being loose on the shaft 50. Against this loose flange 57 a spring, 58, bears. The distance between these flanges 56 and 57 is equal to the width of the roll of paper 20, and the center of this distance is on a line with the longitudinal center of the former and the machine. After placing a roll of paper, 20, in position in the machine, the paper is passed from the roll in arrowed direction 59, around roller 51, between its flanges 56 and 57, and passes in direction 21 up to the former. In practice the rolls of paper are sometimes carelessly handled, and thus get telescoped, as shown at 60 60, or the edges are made uneven in other ways. In operation, as the paper is drawn from the roll 20, the roll of paper becomes smaller in diameter, while the roller 51 and the slides 52 52, &c., move forward, keeping always against the paper roll 20. When the flange 57 arrives at the telescoped portion 60 of the roll 20, the flange is moved gradually in arrowed direction 49 by the greater width of the paper roll at this point, until in a few revolutions of the roll 20 a sufficient amount of paper has been unwound to reduce the roll 20 to its regular width. During this operation the roll 20 is gradually moved sidewise in direction 61, the shaft 40 sliding in its bearings 48 48 as it revolves, thus guiding the roll 20, no matter how irregular its sides may be, always into the centralizing flanged roller 51.

Third: *The tension-regulator.*—This regulator is arranged to vary the tension on the roll of paper 20, Figs. 13 and 14, Sheet 3, according to its diameter. To effect this, we arrange on the shaft 40 a friction-pulley, 64— that is, loosely splined at 65 to the shaft, so as to be removable, and yet revolve positively with the shaft 40 during its motion. Fixed to one bracket 19 is a post, 66, and fixed to

one slide 52 is a post, 67. To these two posts respectively are hooked two springs, 68 and 69, and to the other ends of the springs a band, 70, is attached, which passes over the pulley 64. When a roll of paper is placed in the machine, the slides 52 are pushed back, as shown in the drawings, and a sufficient amount of pressure is exerted on the friction-pulley by both springs to give the required holdback to the roll of paper 20; and as the roll diminishes in size less and less tension is exerted by the springs 68 and 69, because of their shortened length. In operation, as the roll of paper revolves in direction 59, the friction-pulley 64 draws the band 70, and lengthens the spring 68 and shortens the spring 69. This has the effect of rewinding any slack paper when the machine stops, for the inertia of the roll 20 will unwind a little of the paper; but as the springs 68 and 69 regain their uniform lengths, the roll 20 is turned backward, or in an opposite direction to arrowed direction 59.

Fourth. *The apparatus forming a tucked-paper tube.*—We will now describe the formation of the tucked tube from the time the paper leaves the centralizer to the time it is passed between the drawing-rolls. The paper passes from the centralizer upward, in direction 21, Fig. 15, Sheet 4, and is drawn around guide-roll 22 upon the apron 73, and thence upon and around a former, 24. A line of paste, 74, is laid near one edge of the paper by a paste-roll, 23, which is supplied from a dish, 76, which in turn is supplied by a paste-bottle, 77, of glass, that has a vent, 78, which supplies paste to the dish 76 whenever the surface of the paste in the dish is lower than the vent 78. The paste-roll 23 turns upon a stud, 79, which is fixed in a lever, 80, pivoted at 81. The paste-roll 23 is held against the paper on guide-roll 22 by a spring, 82, acting on the opposite end of the lever 80. The paste-roll 23 and guide-roll 22 are geared together by gears 83 and 84, by means of which the paste-roll is driven positively. As the paper passes from the apron 73 to the former 24, it is guided thereon by two corner-rolls, 85 and 86, and the two edges of the paper are led under the former by a tucking in roll, 87, and two former-rolls, 88 and 89, and the lap is laid together and pressed by the roll 90, all substantially as shown and described in our application for Letters Patent filed July 16, 1883. In putting paper on the former 24 it is desirable to have these rollers out of the way, and this we accomplish by depressing the rollers, so that access may be had between them and the under part of the former 24. In Figs. 17 and 18, respectively, Sheet 4, a side view and plan of one of these brackets, 91, is shown. In this bracket 91 is pivoted a head, 92, having a projection, 93, under which a bolt, 94, is pressed upward by a spring, 95, adjusted by a screw, 96. In the head 92 the roller 90 is free to revolve. When it is desired to depress the roller 90, it is pressed downward until the projection 93 is caught by the corner of the bolt 94, which locks the head 92 in the full line position shown in Fig. 17, Sheet 4, its position in actual operation being shown by the dotted lines. After the paper has been drawn around the former 24, and the lap pasted together by the roller 90, the tube is drawn forward in the direction shown by the arrow 1, and passes upon the converging plates 97 and 98, which flattens the tube until it passes between the drawing-rolls 99 and 100 in frame-work 25. The sides of the tube meanwhile are tucked into recesses 101 and 102 of the former, which is accomplished by means of four beveled rollers, 103 104 105 106, which are set diagonally, so as to lead the paper inwardly. These four rollers are placed on shafts that turn in brackets 107 108 109 110. In Fig. 10, Sheet 2, another view of these rollers may be seen, looking in the direction of the arrow 1 from the line *ab*, Fig. 15, Sheet 4. In it a cross-section of the former 24 is also shown, and the recesses 101 and 102, and the rollers 103 to 106 are shown in position. In operation these rollers keep the paper stretched over the four corners 111 112 113 114, thus directing the tucks of the tube inwardly, and as the tube is drawn forward by the drawing-rolls 99 and 100, Figs. 15 and 16, Sheet 4, the tube is flattened more and more, until it assumes the tucked-tube shape shown in Fig. 1, Sheet 1. While making the tube on the former 24, a hole is cut through the upper wall of the tube. This hole 118, Fig. 21, Sheet 6, is cut by means of a knife, 119, Figs. 15 and 16, Sheet 4, of suitable shape, carried in direction 120 by the shaft 121, which shaft derives rotary motion by a train of four bevel-gears, 122 123 124 125, on shafts 121, 126, and 132, which are supported by brackets 128 129 130 and frame-work 25. The shaft 132 derives its motion in a manner to be hereinafter explained. In the former 24 is placed a rubber roller, 115, which is free to revolve on its shaft 131. As the paper tube passes over this roller 115, the notch-knife 119 revolves in direction 120, and cuts a hole in the tube at each revolution, which defines the length of the blank for the bag.

Fifth. *The apparatus to fold the bottom diamond.*—After the tucked tube is formed and drawn along by the drawing rolls 99 and 100 on shafts 132 and 127, Figs. 19 and 20, Sheet 5, it is passed to the cutting-rolls 133 and 134 on shafts 135 and 136, the first two being geared together by two gears meshing into one another, and shown only in the plan, Fig. 20, Sheet 5, at 137, while the cutting-roll gears are shown at 138 in like manner, being omitted in Fig. 19, to show the rolls themselves more clearly. The lower drawing-roll, 99, and the lower cutting-roll, 133, are connected by an intermediate gear, 139. To this intermediate gear is fastened a driving-pulley, 140, on the stud 141. The pulley is driven by a belt, 142, moving in direction 143. A loose pulley, 144, is placed adjoining the driving-pulley, upon which the belt is shifted to stop the machine.

As the tucked tube passes between the cutting-rolls 133 and 134, a severing-knife, 145, cuts the tube into blanks at each revolution, the cut being made across the hole 118, as shown in Fig. 21, Sheet 6, and two slits, 6 and 7, are made at the same time by a slitter-knife, 148, Figs. 19 and 20, Sheet 5, adjoining the severing-knife 145, both of which cut into the rubber pad 149 in roll 133. The severing of the tube is effected at the same time that the blank 150 is delivered to the carriage 26. Upon this carriage the first operations of folding the bottom are performed, namely, the folding of the diamond 8, Fig. 2, Sheet 1, and in order to explain the method of folding it, we have represented the operations in four perspective views in Figs. 22, 23, 24, and 25, Sheet 6, wherein only the necessary parts are shown, to avoid confusion. Here the tucked tube passes between the cutting-rolls 133 and 134, Figs. 22, 23, and 24, Sheet 6. The carriage 26 slides forward and backward on ways 116 and 117, Figs. 19 and 20, Sheet 5, and contains, first, a presser-plate, 154, Figs. 22 to 25, Sheet 6, having a motion downward on carriage 26; and, secondly, a lifting-plate, 155, having a swinging motion upward; and, thirdly, a pair of tuck-arms, 156 and 157, with triangular ends, on which are pivoted a pair of triangular-shaped tuck-wires, 158 and 159. These tuck arms and wires have a swinging motion inwardly toward the paper tube. The carriage 26 travels between two side-folder plates, 160 and 161, Figs 23, 24, and 25, that can swing downward upon the carriage 26 while it is in its forward position. A curved plate, 162, Figs. 24 and 25, is placed in front of the carriage 26 and near the cylinder 27, Fig. 19, Sheet 5; and four turning-fingers, 163 and 164, 165 and 166, Figs. 22, 23, 24, and 25, Sheet 6, are fixed adjacent to the sides of the carriage 26.

The operations of making the diamond will now be described.

The blank 150, Fig. 22, Sheet 6, is entered between the carriage 26 and presser-plate 154, as shown at 167, and while they travel forward in direction 168 the presser-plate 154 drops upon the blank and holds it firmly to the carriage 26, Fig. 23, Sheet 6, and at the same time the severing-knife 145 cuts off the blank 150, allowing the carriage to carry it off. As soon as the presser-plate 154 has gripped the blank 150, the front part, 167, thereof springs open sufficiently to allow the triangular ends of the tuck-levers 156 and 157, with the wires 158 and 159, to swing into the tucks 3 and 4, as seen in Fig. 23, Sheet 6. The wires 158 and 159 then arrive in front of the turning-fingers 163 and 164, and as the carriage travels forward in direction 169 these wires are turned over on their pivots, assuming the position shown in Fig. 24, Sheet 6, causing the front end of the bag-blank to assume the box shape 170. The lifting-plate 155 is raised at the same time level with the surface of the carriage, as seen in Fig. 24. The carriage then travels farther along, and when it arrives between the two side-folder plates 160 and 161, which are shown in dotted lines in Fig. 24, these plates are swung downward, which flattens the box 170 into the diamond 8, as seen in Fig. 25, Sheet 6, and the pressure of the presser-plate 154 is released at the same time. The front end, 171, of the diamond is thus laid upon the curved plate 162, from which it passes to the cylinder 27, Figs. 19 and 20, Sheet 5, being gripped by one of three grippers, 172 173 174, in the cylinder 27, each time a diamond is folded, which draws the bag-blank from the carriage 26 and from under the side-folder plates 160 and 161, which remain down for a short while. Referring again to Fig. 25, Sheet 6, just before the diamond-folded blank is drawn away from the carriage 26, the tuck-arms 156 and 157 spring outward, as shown in Fig. 25, thus releasing the blank 150 entirely, which passes on, as just described. The carriage 26 now slides backward, and during the return stroke the presser-plate 154 is elevated to allow the next blank to enter. The lifting-plate 155 is dropped, to allow the front part, 167, of the blank 150 to spring open when pressed by the presser-plate 154, and the tuck-wires 158 and 159 are swung over by striking the two fixed turning-fingers 165 and 166, Fig. 22, Sheet 6, thus preparing them to enter the tucks for forming another box 170.

We will now describe the method of causing the foregoing motions, and refer to Figs. 19 and 20, Sheet 5.

The carriage 26 is driven by a pair of connecting-rods, 175 175, and cranks 176 176, and gears 177 177, which derive rotary motion by a train of intermediate gears, 178 178, 179, 180, and 181, the last one meshing into the lower cutting-roll gear, 138. The carriage 26 thus receives by the crank-stroke a variable motion having a stroke of about one-half the length of the bag. Near the beginning and near the end of the crank-stroke there are two moments when the speed of the carriage 26 in going forward is uniform with the speed of the paper passing through the cutting-rolls 133 and 134, and it is at these moments of uniform speed, first, that the blank 150 is severed and delivered to the carriage; and, secondly, that the diamond-folded blank is delivered from the carriage 26 to the cylinder 27. By this arrangement of a crank-stroke the reciprocating motion of the carriage is rendered easy and made capable of a high speed, as the carriage 26 starts and stops gradually at the beginning and end of its stroke. During the carriage motion the presser-plate 154 drops and grips the blank 150, then stays down until the diamond is folded, then is released to allow the blank to be drawn away, then on the return-stroke of the carriage it is elevated to allow another blank to enter. These motions are accomplished by the following devices, that are arranged on

both sides of the carriage; but we will describe and refer to those on one side only, as the two sets of devices are duplicates.

To the presser-plate 154, which is pivoted on ears on the carriage 184, a lever, 185, is connected, which lever is fixed to a shaft, 186. From this shaft 186 another lever, 187, projects downward, and its end is positioned opposite to the pin of the connecting-rod 175. The lever 187 is connected to a slide, 188, on the connecting-rod 175 by a rod, 189. A roller, 183, on the slide 188, abuts against a cam, 190, fixed to the crank-pin 191, and is held against the cam by a spring, 192. This cam 190 is shaped so as to operate on the slide 188 and along to the presser-plate 154 as the crank 176 revolves, giving to the presser-plate the requisite motion at the proper times.

The next motion is that of the lifting-plate 155, which, as before mentioned, is elevated a little after the presser-plate has been dropped on the carriage. This plate 155 is lifted by a roller, 193, running on a track, 194, under the carriage.

The next motion is the tuck-arm motion. These arms 156 and 157 operate to form the box 170, as before described, and by referring to one side only it will be seen that arm 157 is pivoted on an upright shaft, 195, to which an arm, 196, is fixed. A roller, 197, at the end of the arm 196, abuts against a switch-cam, 198, when the carriage 26 goes forward, and on the return-stroke the tuck-arm is swung outward by a coiled spring, 199, and the switch-cam 198 swings out of the way of the roller 197, and the switch-cam 198 is returned to place by a spring, 200.

The next motion to describe is the side-folder motion, which flattens the box 170 into the diamond-shape. The side-folder plates 160 and 161 are both shown in Figs. 19 and 20, Sheet 5; but we have shown the operating mechanism only on one side in Fig. 20, but complete in Fig. 19, both sides being similar. The side-folder plate 161 is hinged in a bracket, 203, on a cross-bar, 202. To the plate is secured a sector, 205, into which meshes a sector ended lever, 206, vibrating on a stud, 207, in bracket 208 on frame-work 204. To the segment 206 a roller, 209, is attached, which is operated by a cam, 210, on shaft 211. This shaft is driven continuously by a gear, 212, meshing into a spur, 213, (shown only in Fig. 20,) on shaft 214, upon which cylinder 27 is secured. The cam 210 is so timed that it will drive the sector-ended lever 206 and sector 205 and plate 161 at the proper times, as before described.

The next motion is one which is used to assist in delivering the diamond to the cylinder 27. It consists of a vibrating finger, 215, on a shaft, 216, in a bracket, 217. The bevel-pinion 218 on shaft 216 meshes into a bevel-gear, 219, on the hub of the sector-ended lever 206, from which the finger 215 derives its swinging motion to and from the cylinder 27. The point of the finger 215 enters the box 170 while it is being formed and assists in pushing the front end of the diamond downward toward the cylinder 27, so that the point 171, Fig. 25, Sheet 6, of the diamond 8 can be seized by one of three grippers, 172, 173, 174, Figs. 19 and 20, Sheet 5, in the cylinder 27. These grippers are rocked on shafts 220 in the cylinder 27, and are tipped over at the proper moment by a stud, 221, in frame-work 204, striking dogs 222 on the shafts 220, so that the grippers will seize the bag-blanks and carry them upon the cylinder 27 in succession. This gripper-motion, in combination with a cylinder, is similar to those used upon printing-presses, and therefore requires no detailed description here. As the bag-blanks pass under the presser-roll 28, the diamond is flattened upon the cylinder 27, and three pairs of side-grippers, 224, 225, and 226, Fig. 26, Sheet 7, are rocked upon the bag by a stud, 227, in frame-work 204. These grippers seize the bag at the points 228 and 229, Fig. 3, Sheet 1.

By referring to Figs. 28 and 29, Sheet 6, the side-gripper motion will be more readily understood. Here the grippers 224 and 230, being shown enlarged, are pivoted on pins 231 and 232, and below these there are two pins engaging in spiral slots in cams 233 and 234 on shaft 235 in cylinder 27. Presser-plugs 236 and 237 press by means of springs against the grippers 224 and 230, keeping them placed open or closed, as shown in the drawings in dotted and in full lines. A dog, 238, on shaft 235 is struck by the stud 227, to close the grippers on the bag.

Going back to Figs. 26 and 27, Sheet 7, and having gripped the diamond by a center-gripper and a pair of side-grippers on the cylinder 27, we will now proceed to describe the next improvement.

Sixth. *The apparatus which enables paste to be applied to the diamond without danger of pasting the machine during the absence of bags in the machine.*—We accomplish this by recessing the cylinder 27, Figs. 26 and 27, Sheet 7, underneath the paste-roll 29. This roll consists of a portion of a circle, the periphery of which resembles a letter U, and it receives its paste from a distributer-roll, 242, Fig. 26 only, that takes paste from a reservoir similar to that hereinbefore described. The roll 29 is driven by a shaft, 243, and gear 244, meshing into spur-gear 213, both of which are shown only in Fig. 27. The lines of paste deposited by the roll 29 are shown at 12 and 13 in Fig. 3, Sheet 1. Around the cylinder 27, Figs. 26 and 27, Sheet 7, we cut two recesses or grooves, 246 and 247, that are a little wider than the paste-roll lines, and are immediately beneath them, and the cylinder is also recessed beneath that part where the curve of the U matches. If a bag is absent, the paste on the paste-roll 29 cannot touch the cylinder 27; but when a bag is present the paste will be applied as indicated.

Seventh. *The apparatus to fold the flaps of the bag.*—Referring to Figs. 26 and 27, Sheet 7, after the paste-roll 29 has applied paste to

the diamond, its front end or flap, 9, (see Fig. 4, Sheet 1,) is released by a stud, 251, tripping over the gripper 174, Fig. 31, Sheet 7. The flap 9 then rises from the cylinder 27, and, going in arrowed direction 249, passes over the bar 250, Figs. 26, 27, 30, and 31, Sheet 7, and it is doubled or folded over by a folder-blade, 30, on rock shaft 252, worked by an arm and rod from operating-lever 253. This last derives a vibratory motion at proper intervals from cam 254 on shaft 255, and the latter is driven by a gear, 256, meshing into spur 213. (Shown only in Fig. 27.) When the folder-blade 30 has completed its motion, a rocking box, 31, on rock-shaft 258 presents one open side to the folded bag, as seen in Fig. 30, Sheet 7. The bag is now held to the cylinder 27 by the side-grippers 224 only and these push the bag into the box 31, which then rocks over into the position shown in Fig. 31. The box-shaft 258 is rocked by an arm and rod from the same operating-lever 253 and cam 254 that drive the flap-folder blade 30. The operating-lever 253 therefore vibrates the folder-blade 30 and the rocking box 31 alternately to and from one another, as shown in Figs. 30 and 31, Sheet 7, respectively. When rocked together, as in Fig. 31, a pinching-blade, 259, on shaft 252 enters the outer open side of the rocking box 31, and pinches or presses the flap at the folding-line 14, Fig. 4, Sheet 1. When the working-box 31, Fig. 31, Sheet 7, assumes the position shown, the folded bottom of the bag is withdrawn from the box 31 by the side-grippers 224 and the bottom 260, Fig. 5. Sheet 1, is thus doubled over upon the body 2 of the bag, and upon the second flap, 10. In this condition the bag passes beneath the tape-roller 261, Figs. 26, 27, 30, and 31, Sheet 7, and is deflected from the cylinder 27 by a plate, 262. The side-grippers 224 (see Fig. 31) are meanwhile rocked open by a stud, 257, to release the bag, which then passes between tapes 32 and 33, and it is pressed between rollers 34 and 35 sufficiently to make the flaps 9 and 10, Fig. 6, Sheet 1, adhere, in which condition the bag is delivered from the rollers 34 and 35, Figs. 26 and 27, Sheet 7, as the bottom 260 of the bag springs open, as shown, ready to proceed to a drying apparatus. (Not shown in this application.)

The next motion we will describe is:

Eighth. *The automatic stop-motion.*—This motion consists of a feeler, 265, Figs. 19 and 20, Sheet 5, held on an arm, 266, on shaft 255. A spring, 267, bearing against a hook, 268, keeps the feeler 265 pressed outward together with the hook 268 on the arm 266. When the feeler 265 revolves, it feels whatever bags may be held by the cylinder 27, and the spring 267 is compressed and the hook 268 is sprung inward. If, however, there is no bag on the cylinder 27, the point of the feeler 265 drops into a recess, 269, in the cylinder 27, and the hook 268 makes a larger sweep in its revolution, and in such event it comes in contact with a dog, 270, secured to a shaft, 271, in frame-work 204, and swings the dog 270 aside. This motion is communicated to an arm, 272, on shaft 271, and so on through a rod, 273, bell-crank 274, rod 275, and catch 276, which catch is depressed. This allows a shipper-rod, 277, in frame-work 25, to be sprung in direction 278 by means of a spring, 279. A head, 280, on the shipper rod 277, through which the belt 142 passes, guides it from the driving-pulley 140 to the loose pulley 144, thus stopping the machine.

We claim as our invention—

1. The combination of the roller 51, the two slides 52, the two racks 53, the shaft 54, and the two pinions 55, substantially as described.

2. The combination of the former 24, having the tuck-recesses 101 and 102, with the beveled rollers 103, 104, 105, and 106, substantially as described.

3. The combination of the roller 90, the head 92, the bolt 94, and the spring 95, substantially as described.

4. The combination of the carriage 26, operated by the connecting-rod 175, the crank 176, and the gear 177, with the presser-plate 154, operated by the connecting-rod 189, the cam 190, and the spring 192, substantially as described.

5. The combination of the carriage 26, the switch-cams 198, the springs 199, and the tuck-arms 156 and 157, substantially as described.

6. The combination of the crank 176, provided with the cam 190, rigidly fixed thereto by the crank-pin 191, with the connecting-rod 175, the connecting-rod 189, and the spring 192, all constructed and adjusted in such a way, substantially as described, as that the connecting-rod 189 has an auxiliary reciprocating motion in the same line as the general reciprocating motion of the two connecting-rods, all substantially as described.

7. The combination of the finger 215 and the shaft 216, both rocking substantially as described, with the carriage 26, reciprocating substantially as described, all operating to deliver the front end, 171, of the diamond to one of the grippers of the cylinder 27, substantially as described.

8. The combination of the pincher 259 and the box 31, both operating together to flatten the fold at the line 14, substantially as described.

9. The combination of the cylinder 28, the feeler 265, the hook 268, the spring 267, and the arm 270, all operating together in such a way as that when the point of the feeler enters one of the recesses 269 the said mechanism will stop the machine by shifting the belt to the loose pulley 144, through intermediate mechanism, substantially as described.

WILLIAM A. LORENZ.
WILLIAM H. HONISS.

Witnesses:

ALBERT H. WALKER,
MORGAN W. BEACH.

(No Model.) 7 Sheets—Sheet 1.

W. A. LORENZ & W. H. HONISS.

PAPER BAG MACHINE.

No. 333,647. Patented Jan. 5, 1886.

Fig. 1

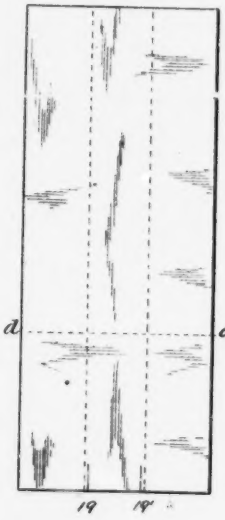

Fig. 3

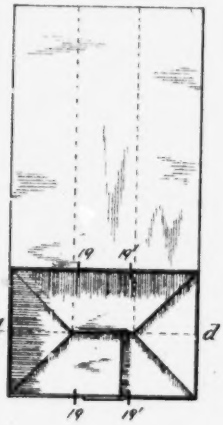

Fig. 5

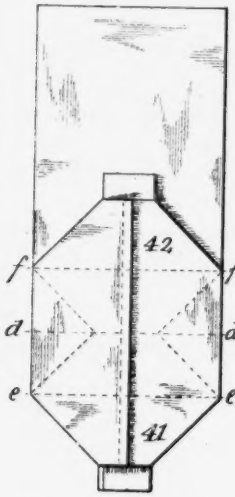

Fig. 6

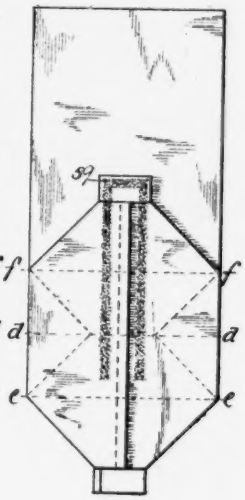

Fig. 4

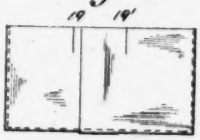

Fig. 2

Fig. 7

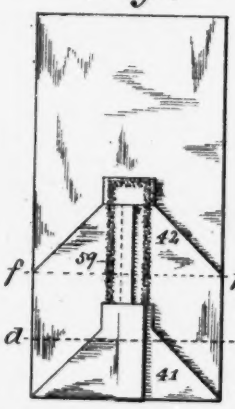

Fig. 8

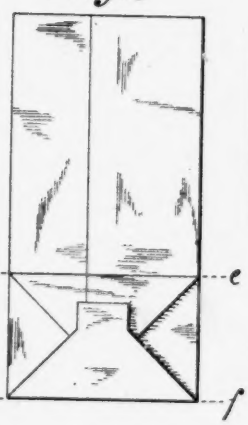

Fig. 9

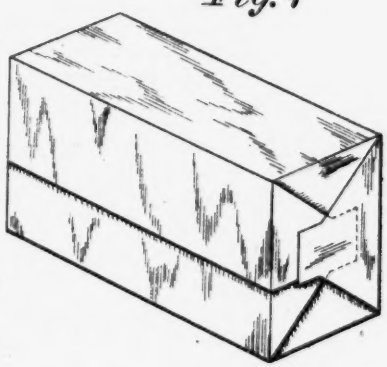

Witnesses:

Frank A. Parpont

Edward E. Claussen

Inventors:

William A. Lorenz.

William H. Honiss.

(No Model.) 7 Sheets—Sheet 2.

W. A. LORENZ & W. H. HONISS.

PAPER BAG MACHINE.

No. 333,647. Patented Jan. 5, 1886.

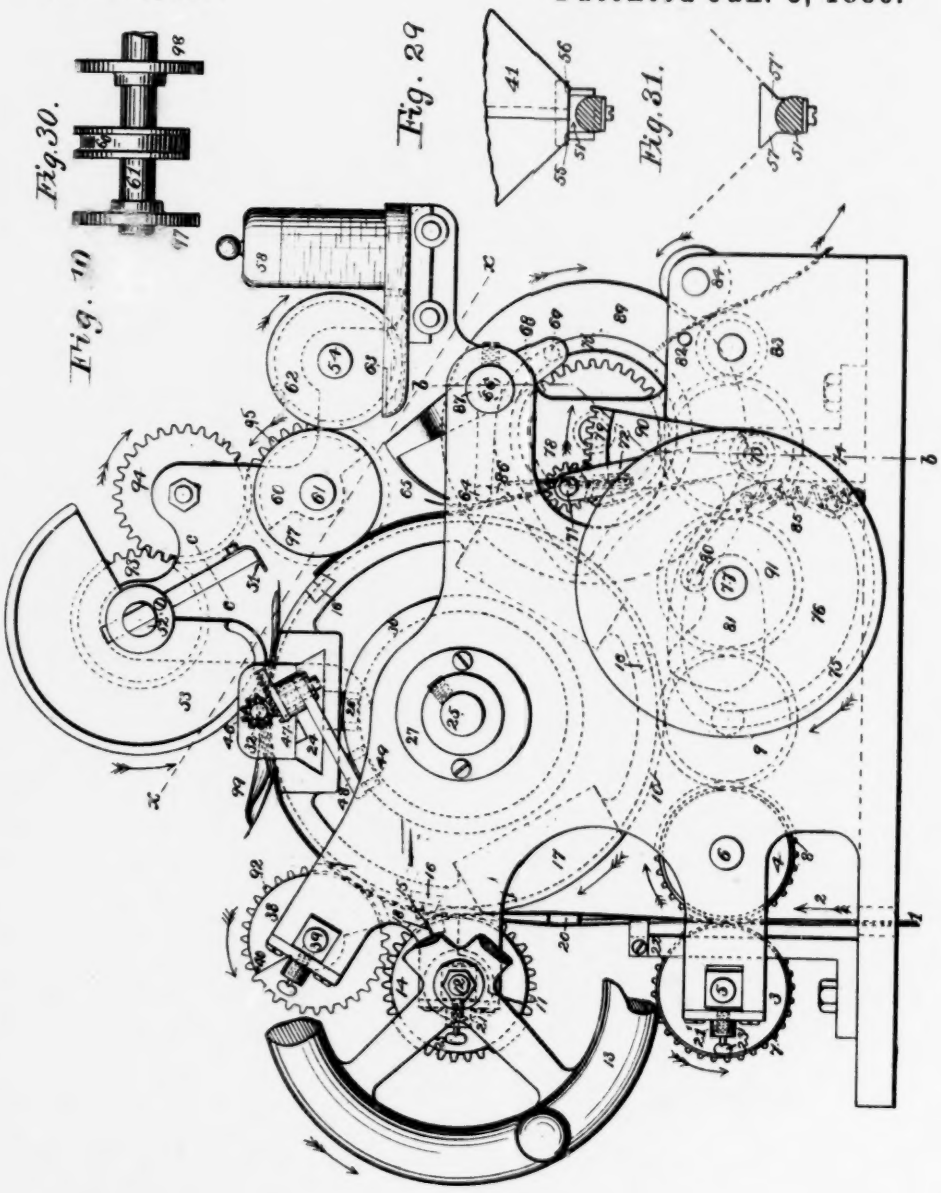

Witnesses:
Frank H. Pierpont
Edward E. Claussen

Inventors:
William A. Lorenz.
William H. Honiss.

(No Model.) 7 Sheets—Sheet 3.

W. A. LORENZ & W. H. HONISS.

PAPER BAG MACHINE.

No. 333,647. Patented Jan. 5, 1886.

Fig. 11

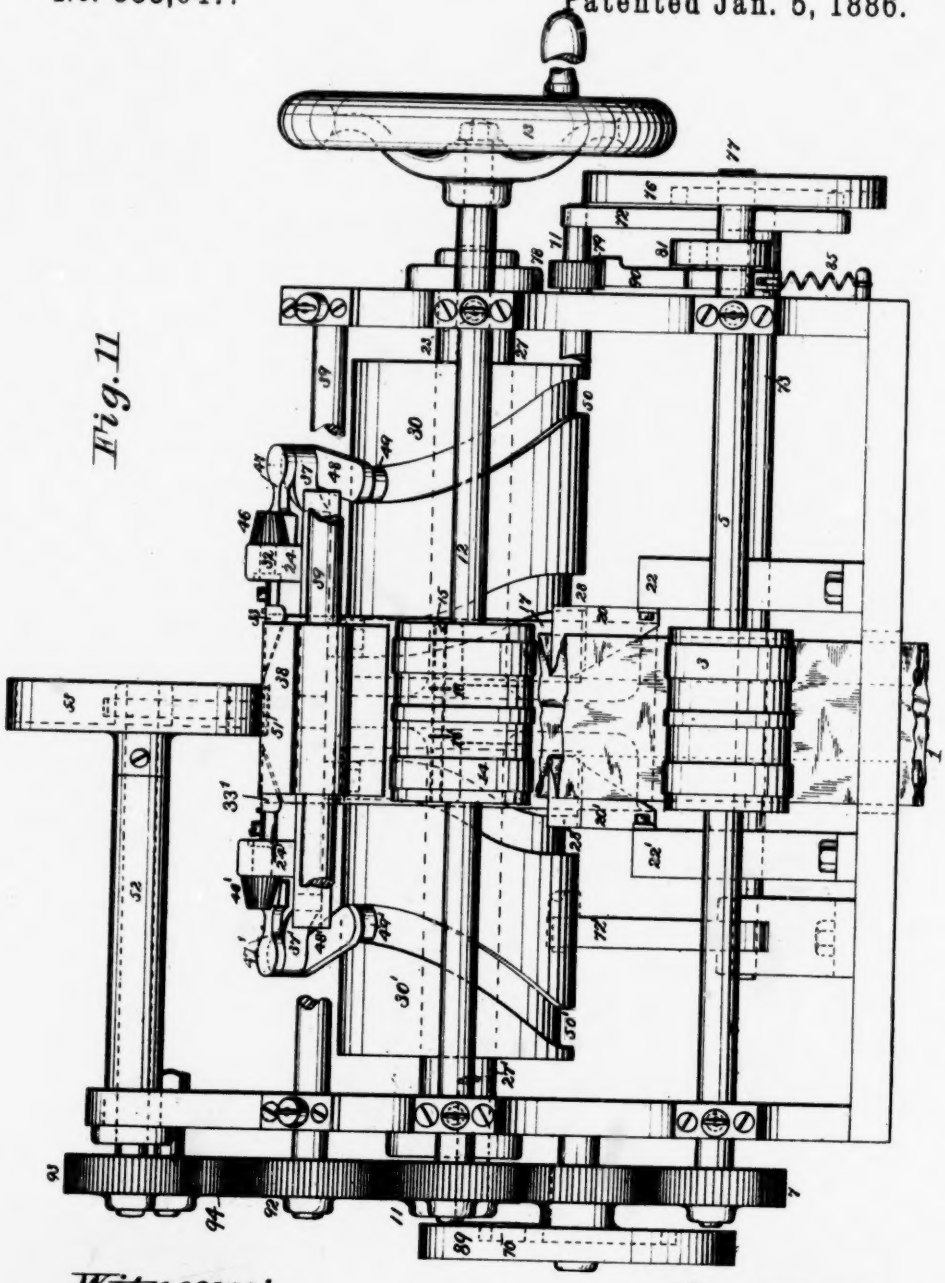

Witnesses:
Frank A. Pierpont
Edward E. Claussen

Inventors:
William A. Lorenz.
William H. Honiss.

(No Model.) 7 Sheets—Sheet 4.

W. A. LORENZ & W. H. HONISS.

PAPER BAG MACHINE.

No. 333,647. Patented Jan. 5, 1886.

Fig. 13

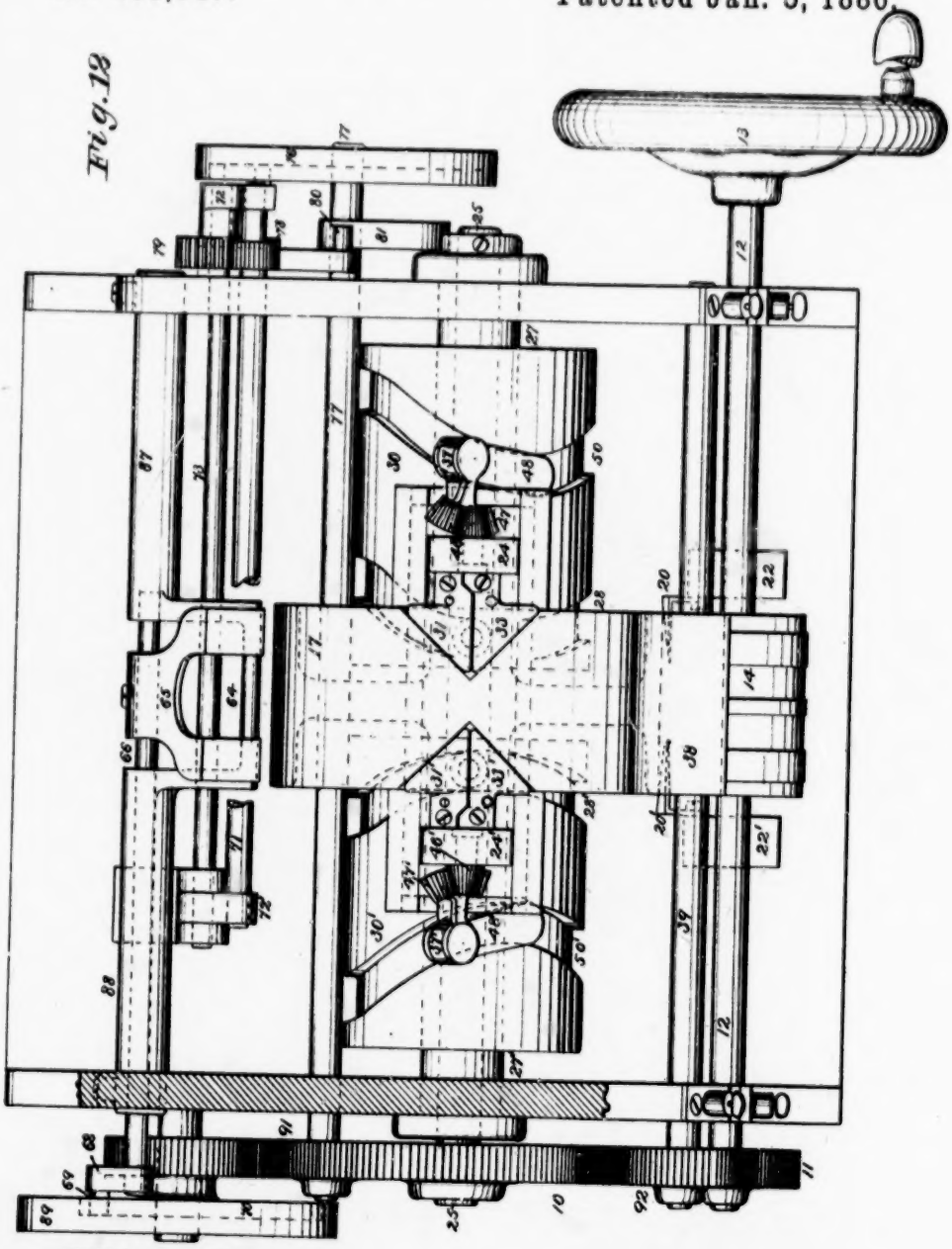

Witnesses:
Frank H. Pierpont
Edward E. Clausey

Inventors:
William A. Lorenz.
William H. Honiss

(No Model.) 7 Sheets—Sheet 5.

W. A. LORENZ & W. H. HONISS.

PAPER BAG MACHINE.

No. 333,647. Patented Jan. 5, 1886.

Fig. 15

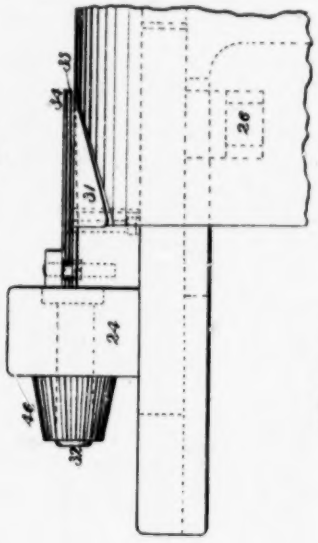

Fig. 16

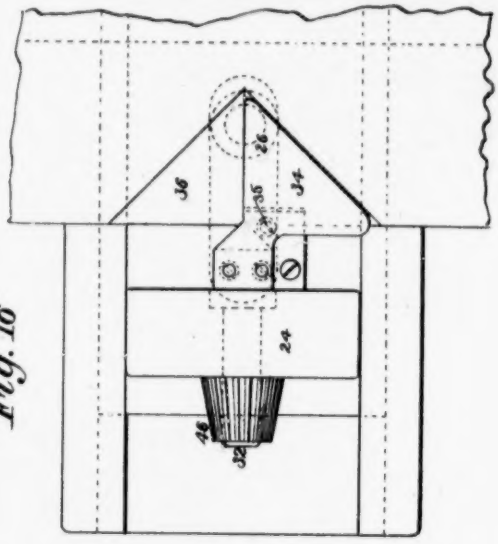

Fig. 13

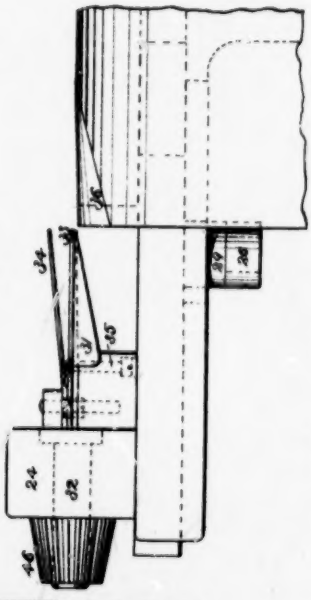

Fig. 14

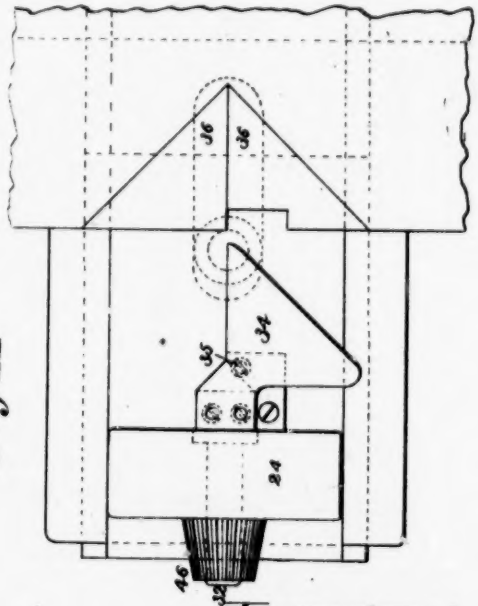

Witnesses:
Frank H. Pierpont
Edward E. Claussen.

Inventors:
William A. Lorenz.
William H. Honiss.

(No Model.) 7 Sheets—Sheet 6.

W. A. LORENZ & W. H. HONISS.

PAPER BAG MACHINE.

No. 333,647. Patented Jan. 5, 1886.

Fig. 19

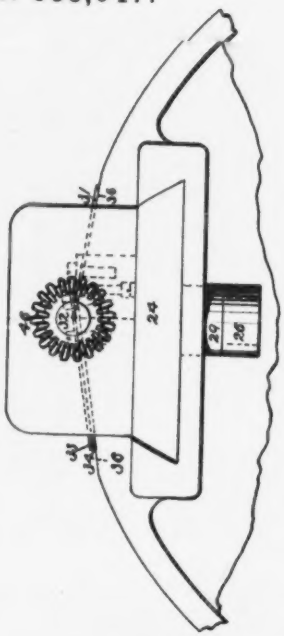

Fig. 20

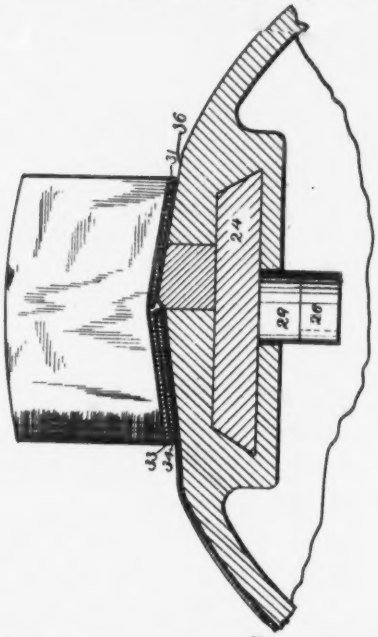

Fig. 17

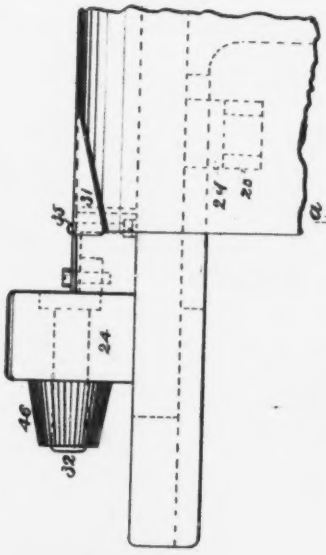

Fig. 18

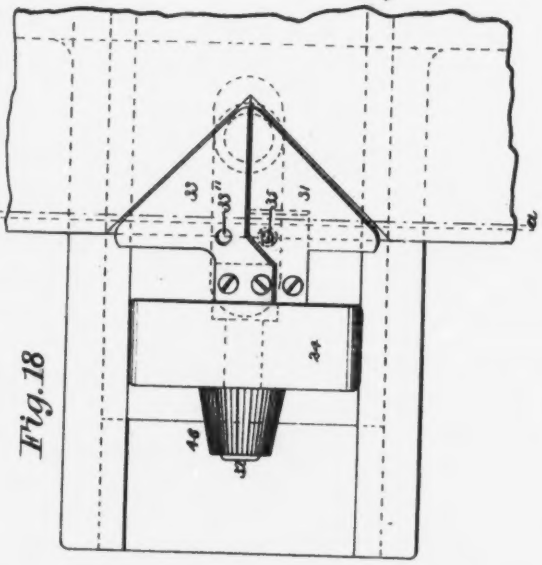

Witnesses:
Frank A. Pierpont
Edward E. Claussen

Inventors:
William A. Lorenz.
William H. Honiss.

(No Model.) 7 Sheets—Sheet 7.

W. A. LORENZ & W. H. HONISS.

PAPER BAG MACHINE.

No. 333,647. Patented Jan. 5, 1886.

Fig. 21

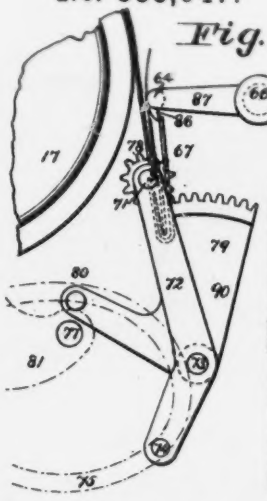

Fig. 22

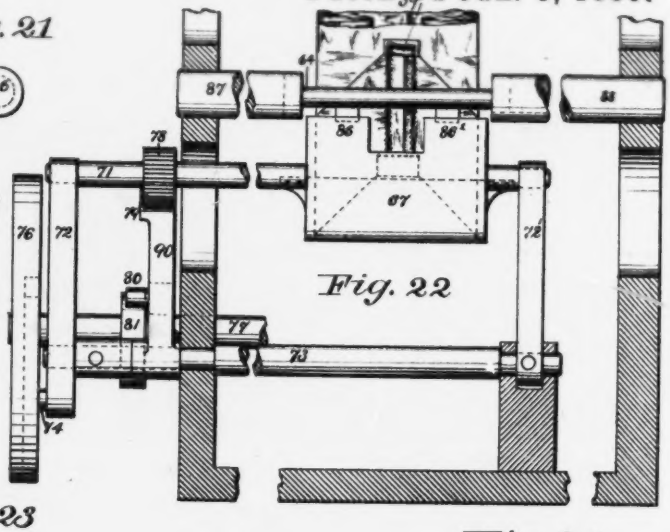

Fig. 23

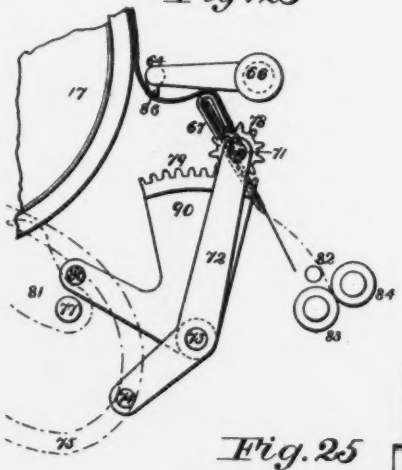

Fig. 24

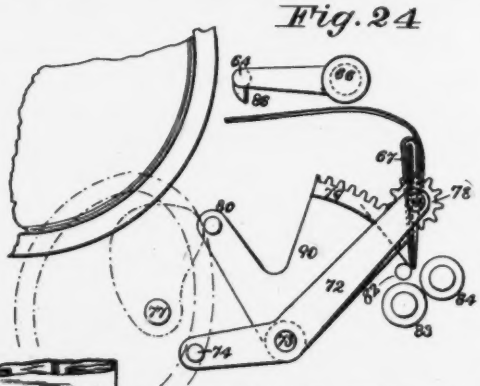

Fig. 25

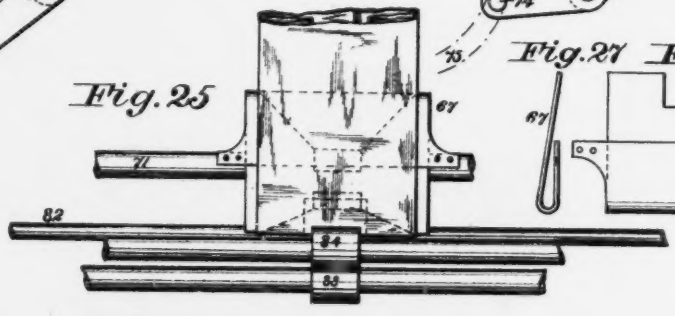

Fig. 27

Fig. 28

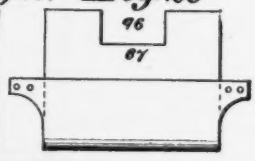

Witnesses:
Frank A. Pierpont
Edward E. Claussen

Inventors:
William A. Lorenz.
William H. Honiss.

UNITED STATES PATENT OFFICE.

WILLIAM A. LORENZ AND WILLIAM H. HONISS, OF HARTFORD, CONNECTICUT, ASSIGNORS TO FELIX W. LEINBACH AND CLARENCE A. WOLLE, BOTH OF BETHLEHEM, PENNSYLVANIA.

PAPER-BAG MACHINE.

SPECIFICATION forming part of Letters Patent No. 333,647, dated January 5, 1886.

Application filed November 12, 1884. Serial No. 147,784. (No model.)

To all whom it may concern:

Be it known that we, WILLIAM A. LORENZ and WILLIAM H. HONISS, both of Hartford, Connecticut, have invented a certain new and useful Paper-Bag Machine, of which the following description and claims constitute the specification, and which is illustrated by the accompanying seven sheets of drawings.

This machine manufactures continuous tucked paper tubing into square-bottom paper bags, and its central feature is a continuously-rotating cylinder, upon which the bottom of the bag-blank is opened out into a box-like form, and then folded down into a diamond shape, instead of that work being done upon a reciprocating carriage, as in the machine shown in our application for Letters Patent filed May 15, 1884.

Figure 1 of the drawings is a plan view of a piece of tucked paper tubing of suitable length to make one square-bottom paper bag. Fig. 2 is an end view of the same. Fig. 3 is a plan view of the blank of Figs. 1 and 2, with its lower end opened out into a box-like form; and Fig. 4 is an end view of the blank of Fig. 3. Fig. 5 is a view of the blank of Figs. 3 and 4, with the side flaps folded down in their permanent places, and with the top and the bottom flap folded temporarily backward, so as to constitute what we call the "diamond." Fig. 6 is a view of the blank of Fig. 5, with paste applied to its upper flap and to other proper portions thereof. Fig. 7 is a view of the blank of Fig. 6, with its lower flap folded over to its permanent place. Fig. 8 is a view of the blank of Fig. 7 after the bottom of the blank has been turned over on the line of its junction with the body of the same, so as to face in the same direction as the seamed side of the body of the blank, and after the upper flap has been folded back upon the lower flap, and the bag thus completed. Fig. 9 is an isometric view of the bag of Fig. 8 opened out for filling. Fig. 10 is a side view of our new paper-bag machine. Fig. 11 is a front view of the same. Fig. 12 is a plan view of that part of the machine which is below the line X X of Fig. 10. Fig. 13 is a rear view of the left-hand member of a pair of mechanisms which open out the lower end of the blank of Figs. 1 and 2 into the box-like form shown in Figs. 3 and 4, and which mechanisms we denominate the "box-folding mechanisms," it being understood that the left-hand side of the machine is the left-hand side looking from the rear, or that side nearest the hand-wheel 13. Fig. 14 is a plan view of the mechanism shown in Fig. 13, both those figures showing that mechanism at the outward end of its reciprocating stroke. Figs. 15 and 16 are respectively a rear and plan view of the mechanism shown in Figs. 13 and 14 when it is at the inner end of its stroke, but before it has done its work there. Figs. 17 and 18 are like views of that mechanism at the inner end of its stroke and in the position it assumes in performing its folding function there. Fig. 19 is a view of the left-hand end of what is shown in Fig. 17, and Fig. 20 is a cross-section on the line *a a* of Fig. 18. Fig. 21 is a detailed side view of the reversing-pocket, and of the mechanism which works it. Fig. 22 is an upright cross-section of a portion of the machine on the line *b b* of Fig. 10, and looking to the left from that line. Fig. 23 is a detailed side view of what is shown in Fig. 21, but in a different position, and also of the mechanism which folds the upper flap, and thus completes the bag. Fig. 24 is a view of what is shown in Fig. 23, but in still another position. Fig. 25 is a fragmentary rear view of part of the mechanism shown in Fig. 24. Fig. 27 is an end view of the reversing-pocket, and Fig. 28 is a side view of the same. Fig. 29, Sheet 2, is a cross-section, looking downward, of the diamond-folder finger on the line *c c* of Fig. 10. Fig. 30 is a plan view of the pasting-disk 60 and the pressing-rolls 97 and 98, all keyed to the shaft 61. Fig. 31 is a plan of the lower end of a modified form of the diamond-folder finger.

The numeral 1 represents a fragmentary view of the tucked paper tubing being drawn from a machine adapted to manufacture it in the direction of the arrow 2 by the drawing-rolls 3 and 4, which rolls are keyed to the shafts 5 and 6, respectively, and are driven by the gears 7 and 8, respectively, and which gears receive motion through the intermediate

gear, 9, and the cylinder-gear 10 from the pinion 11 on the shaft 12, and which shaft is driven by the hand-wheel 13 or by a belted pulley run by a steam-engine or other source of motion. A cutting-roll, 14, recessed at its ends, to allow space for the passage of the box-folding mechanisms, is also mounted on the shaft 12, and a knife, 15, is fastened to that cutting-roll, and severs the tucked paper tubing into bag-lengths by cutting against the rubber pad 16 on the cylinder 17. At the rear side of the knife 15, and at right angles to it, are the two slitting-knives 18 18', which cut the longitudinal slits 19 19' in the new end of the tucked paper tubing at the same time that the knife 15 severs the preceding bag-blank from that tubing. The cutting-roll 14 and the drawing-roll 3 are pressed upon the tucked paper tubing by the springs 21 and 21', respectively, which springs are respectively adjusted by the thumb-screws 23 and 23'. A pair of guides, 20 20', supported by brackets 22 22', respectively, are adapted to enter the two tucks, respectively, of the tucked paper tubing, and thus to open those tucks sufficiently to admit the fixed blades and the turning-blades of the box-folding mechanisms, as hereinafter described. The cylinder 17 is keyed to the shaft 25, and that shaft revolves within the cylindrical bearings 27 27', and is driven by the gear 10, which gear is driven by the pinion 11. The stationary cylinders 30 and 30' are keyed to the inner ends of the cylindrical bearings 27 27', respectively, and each of those stationary cylinders has upon its periphery two continuous cam-grooves, varying from each other in their curves and inclinations. The inner pair, 28 28', of these cam-grooves are counterparts of each other, as also are the outer pair, 50 50'. The function of the cam-grooves 28 and 50 is to work the box-folding mechanisms on the left-hand side of the machine, while the function of the cam-grooves 28' and 50' is to work the box-folding mechanisms of the right-hand side of the machine. The members of the pair of box-folding mechanisms are counterparts of each other, and always operate simultaneously at every step. The cylinder 17 is shown as proportioned and arranged for three pairs of such mechanisms, all run by the same cam-grooves; but only one pair is shown in the drawings, for each pair is identical with either of the others. The three pairs are to be placed at equal distances apart around the cylinder.

Inasmuch as the pair of box-folding mechanisms which are shown in the drawings are counterparts of each other, we will describe only that one of the pair which is on the left-hand side of the cylinder. The roller 26 runs in the cam-groove 28 upon the stud 29, which stud is fixed to the slide 24, and therefore forces that slide to move forward and backward in its dovetail way as the roller runs around the cam-groove 28. The fixed blade 31 is rigidly attached to the front end of the slide 24, while the turning-blade 33 and the presser-plate 34 are rigidly attached to the inner end of the shaft 32, which shaft turns in a bearing in the upward-projecting part of the slide 24, and is worked by the bevel-gear 46. That gear is worked by the sector-gear 47, which is keyed to the top of a shaft passing through the bracket 37 of the slide 24, and having its lower end keyed to the arm 48, which arm is worked by the roller 49, running in the cam-groove 50. The fixed blade, the turning-blade, and the presser-plate are so constructed and placed that their edges, which lie adjacent to each other, are substantially on a line with the axis of the shaft 32. The rotary presser 38 is keyed to the shaft 39, and is driven by the pinion 92, which in turn is driven by the gear 10. This rotary presser is in the form of a sector of a cylinder, the forward edge, 40, of which presses upon the upper surface of the tucked paper tubing just back of the place where the fixed blades and the turning-blades of the box-folding mechanisms operate in the tucks of that tubing. The diamond-sweeper 53 and the diamond-folder finger 51 are mounted on the shaft 52, which shaft is worked by the pinions 93, 94, and 95 from the gear 10. The diamond-sweeper is a disk having a sector thereof cut away, and having a flange of uniform width and of substantially the curvatures shown in Fig. 10. The diamond-folder finger terminates in a thin plate, as shown in Fig. 10, and which may have the outlines shown in Fig. 29, or those shown in Fig. 31. In the first case the plate has the two points 55 and 56 pointing in the direction in which the finger moves, and in the last case the plate has the two short beveled edges 57 and 57', which may be sharp enough to cut their way out of the diamond upon its completion. The pasting-disk 60 is keyed to the shaft 61, and is geared to revolve adjacent to the paste-distributer 62, which latter is a wheel keyed to the shaft 54, and running in the paste-basin 63, which basin is supplied by the paste-reservoir 58. The pressing-rolls 97 and 98 are also keyed to the shaft 61 on the two sides, respectively, of the pasting-disk 60. The stationary bar 64 is provided with the downward-projecting hooks 86 86', and is supported by the angular brackets 87 and 88, with which the bar and the hooks may, indeed, be integral. The shaft 66 is oscillated in proper bearings by the arm 68, which arm is worked by the stud or roller 69, running in the cam-groove 70 on the inner side of the wheel 89. The tucking-blade 65 is attached at its base to the shaft 66, so as to oscillate therewith, and is bifurcated in plan view, as shown in Fig. 12, while each of these bifurcations terminates in a curved and bent-over operating portion, as shown in Fig. 10. The reversing-pocket 67 has its shorter wall fastened to the shaft 71, which shaft oscillates in bearings in the upper ends of the arms 72 and 72', and is worked by the pinion 78, which pinion is operated by the sector-gear 79 on

the upper end of the arm 90. The arms 72 and 72′ are keyed to the shaft 73, while the arm 90 turns loosely upon that shaft. The arm 72 is worked by the roller 74, pivoted thereto and running in the cam-groove 75, cut on the inner side of the wheel 76, which wheel is keyed to the shaft 77, and is run by the gear 91. The arm 90 is worked by the roller 80, pivoted thereto and running around the revolving cam 81, and held in contact therewith by the spring 85. The cam 81 is keyed to and run by the shaft 77. The fixed bar 82 passes from side to side of the machine parallel with the delivery-rolls 83 and 84 and adjacent thereto in substantially the position shown in Figs. 23 and 24. The delivery-rolls are run by a gear keyed to the shaft of one of them and connected with other gearing of the machine, so as to revolve in the proper direction.

The mode of operation of this machine is as follows: Continuous tucked paper tubing is continuously drawn into the machine by the drawing-rolls 3 and 4. Thence it passes by the guides 20 20′, and thence between the cutting-roll 14 and the cylinder 17, and thence between the rotary presser 38 and the cylinder 17. Immediately after leaving the guides 20 20′ the tucks of the paper tubing are entered by the fixed blade and the turning-blade of each member of a pair of box-folding mechanisms. To show how that pair of mechanisms operate upon the paper tubing, it is only needful to explain the operation of the left-hand member thereof, which we will now do. The carriage or slide 24 being forced by the cam-groove 28 toward the inner end of its stroke, while the fixed blade 31, the turning-blade 33, and the presser-plate 34 lie one above another, as shown in Figs. 13 and 14, and while the presser-plate is held out of contact with the turning-blade by the stud 35, fixed in the slide 24, and passing through the hole 33″, Fig. 18, in the turning-blade, the fixed blade and the turning-blade enter the adjacent tuck of the paper tubing, while the presser-plate passes above that tubing. Thereupon the cam-groove 50 forces the roller 49, the arm 48, the sector 47, the bevel-gear 46, and the shaft 32 to turn over the turning-blade and the presser-plate together into the position shown in Figs. 17 and 18. As soon as this turning over begins, the presser-plate, being relieved from the support of the stud 35, springs hard down upon the turning-blade, thus clasping the upper fold of the tuck of the paper tubing between them, while the lower fold of that tuck is held firmly down upon the flat surface 36 of the periphery of the cylinder 17 by the fixed blade 31. As this folding over progresses, that edge of the presser-plate which is substantially on a line with the axis of the shaft 32, together with the corresponding edge of the presser-plate of the right-hand member of the pair of box-folding mechanisms, serves to define the line *d d* of Figs. 1, 3, 5, 6, and 7. The result of this turning over and of the corresponding simultaneous turning over of the right-hand member of the pair of box-folding mechanisms is to open out the lower end of the blank of Figs. 1 and 2 into the box-like form shown in Figs. 3 and 4. Then the diamond-folder finger 51, revolving in the direction of the arrow adjacent to the diamond-sweeper 53 in Fig. 10, comes in contact with the inner side of the forward wall of the box-like form shown in Figs. 3 and 4, and as it continues to revolve draws the box-like form down toward the diamond form of Fig. 5 by means of the pointed or beveled edges of the thin plate, serving to define the diagonal creases upon which the forward end of the diamond is folded down, and by means of the inward strain on the side walls of the box-like form, which strain is caused by the drawing down of the forward wall, and which causes the drawing down of the rear wall of the box-like form into the intermediate form, 99, shown in Fig. 10. The two side flaps of the diamond are thus folded over the rear border of the thin plate, and, on the completion of the forward end of the diamond, the pointed or beveled edges of the thin plate cut their way out, by reason of the greater speed of the end of the finger than that of the cylinder which carries forward the bag-blank. The flange of the diamond-sweeper then flattens the intermediate form, 99, down into the completed diamond of Fig. 5, and holds its flaps in position till the forward end of the diamond passes under the pasting-disk and the pressing-rolls 97 and 98. The cam-grooves 28 28′ and 50 50′ operate to withdraw the fixed blades 31 31′, the folder-blades 33 33′, and the presser-plates 34 34′ from all contact with the paper after the diamond is formed, and also to return the turning-blades and the presser-plates to the position shown, as to the left-hand set thereof in Figs. 13 and 14, while the pasting-disk 60 applies paste at 59 to the diamond, as shown in Fig. 6, and while the diamond passes under the pressing-rolls 97 and 98. The forward end of the diamond then passes to the right-hand side of the bar 64, as shown in Fig. 10, at the same time that the reversing-pocket 67 is in the position shown in Fig. 21, in which position the longer wall of the reversing-pocket being caught by the hooks 86 86′, as shown in Figs. 21 and 22, is sprung somewhat farther away from the shorter wall than when in its normal position relatively to that wall, as shown in Fig. 27. Then the tucking-blade 65 strikes the presented surface of the diamond on the outer end of the line *e e* of Fig. 6, and tucks the diamond over the bar 64, whence its thus doubled portion is forced by the action of the cylinder 17 and the pressing-rolls 97 and 98 into the reversing-pocket 67, the longer wall of that reversing-pocket being provided with the recess 96, so that it may not cover any part of the pasted surface of the diamond. Then the reversing-pocket is carried into the

position shown in Fig. 23, by the action of the cam-groove 75 upon the arms 72 72', while the pocket is turned over into its position shown in the same figure by the action of the cam 81 upon the arm 90, and thus upon the sector-gear 79 and the pinion 78. When the longer wall of the reversing-pocket is thus released from the hooks 86 86', it springs toward the shorter wall, so as to clasp the forward end of the blank of Fig. 7 between the two. As the pocket turns over, the upper edge of its shorter wall constitutes the defining-line upon which the bottom of the blank shown in Fig. 7 is turned over, so as to face in the same direction as the seamed side of that blank. That defining-line makes a crease in the seamed side of the bag on the line *d d* of Fig. 7. Thereupon the reversing-pocket is carried by the arms 72 72' and their connected mechanism into the position shown in Figs. 24 and 25. What was before the rear end of the diamond has now become its forward end, and that end, as it is carried forward by the reversing-pocket and outside of its mouth, strikes against the left-hand side of the bar 82, as shown in Figs. 23 and 24, and is thereby folded over on the line *f f* of Fig. 8, by means of the edge of the longer wall of the reversing-pocket. As the reversing-pocket advances still lower than as shown in Fig. 24 that part of the forward end of the blank of Fig. 7 which is opposite the recess 96 is seized by the delivery-rolls 83 and 84. Those rolls thereupon draw the completed bag out of the pocket, and in doing so press the folds which compose the bottom of the bag firmly together on the zone of the pasted surfaces thereof.

We claim as our invention—

1. The combination of the revolving cylinder 17 with one or more pairs of box-folding mechanisms, constructed substantially as described attached thereto and revolving therewith, substantially as described.

2. The combination of the fixed blade 31', the turning-blade 33, and the presser-plate 34, constructed and arranged substantially as described, and operating substantially as explained.

3. The combination of the slide 24, the shaft 32, the fixed blade 31, the turning-blade 33, and the presser-plate 34, all substantially as described.

4. The combination of the turning-blade 33 with the presser-plate 34, both operating together to clasp the upper fold of the tuck of the paper tubing and to turn it over upon itself, substantially as described.

5. The combination of the presser-plates 34 and 34', arranged with their axial edges on a line with each other and with the axes of the shafts 32 and 32', and operating, when turned over on their axial edges, to define the line *d d* of the blank of Fig. 3, all substantially as described.

6. The rotary presser 38, constructed in the form of a sector of a cylinder, so as to allow the passage of the fixed blades, the turning-blades, and the presser-plates beneath it, and so as immediately after their passage to press the forward edge, 40, upon the tucked paper tubing in their rear, and thus to hold it firmly while it is being entered by the pair of box-folding mechanisms, all substantially as described.

7. The combination of the fixed blades 31 31' and the turning-blades 33 33', operating to firmly hold the bottom of the box-like form, with the diamond-folder finger 51 and the diamond-sweeper 53, operating to fold the walls of the box-like form of Figs. 3 and 4 down into the diamond form of Fig. 5, all substantially as described.

8. The combination of the diamond-folder finger 51, the shaft 52, the cylinder 17, and the shaft 25, all operating together substantially as described.

9. The reversing-pocket 67, oscillating on an axis and having its longer wall as much longer than the other as the width of the bottom of the bag exceeds half that width, all substantially as shown and described.

10. The combination of the arms 72 and 72', worked by the cam-groove 75 and carrying the pinion 78, with the arm 90, worked by the cam 81 and carrying the sector-gear 79, and with the reversing-pocket 67, all substantially as described.

WILLIAM A. LORENZ.
WILLIAM H. HONISS.

Witnesses:
ALBERT H. WALKER,
FRANK A. PIERPONT.

Correction in Letters Patent No. 333,647.

It is hereby certified that in Letters Patent No. 333,647; granted January 5, 1886, upon the application of William A. Lorenz and William H. Honiss, of Hartford, Connecticut, for an improvement in "Paper Bag Machines," an error appears in the printed specification requiring correction as follows: In line 44, page 4, the reference number "31" should be stricken out and the reference number *31* inserted instead; and that the said Letters Patent should be read with this correction therein that the same may conform to the record of the case in the Patent Office.

Signed, countersigned, and sealed this 12th day of January, A. D. 1886.

[SEAL.]

H. L. MULDROW,
Acting Secretary of the Interior.

Countersigned:
M. V. MONTGOMERY,
Commissioner of Patents.

(No Model.) 5 Sheets—Sheet 1.

W. A. LORENZ & W. H. HONISS.

PAPER BAG MACHINE.

No. 337,965. Patented Mar. 16, 1886.

Fig. 1

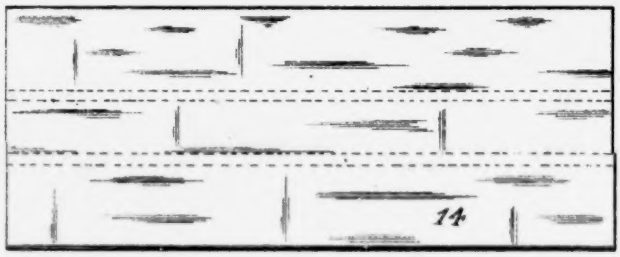

Fig. 2

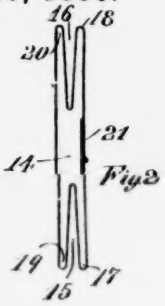

Fig. 3

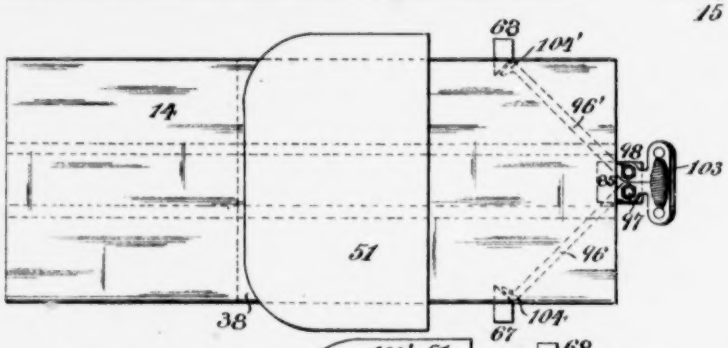

Fig. 4

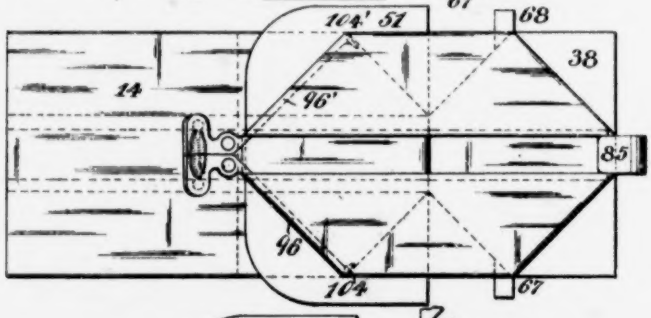

Fig. 5

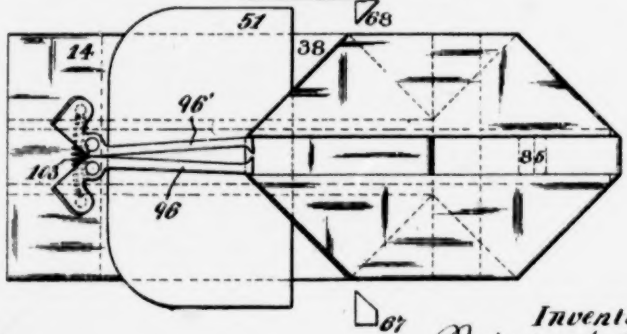

Witnesses

Edward E. Claussen

Henry T. Brick

Inventors

William A. Lorenz

William H. Honiss.

THE NORRIS PETERS CO., WASHINGTON, D. C.

(No Model.) 5 Sheets—Sheet 2.

W. A. LORENZ & W. H. HONISS.

PAPER BAG MACHINE.

No. 337,965. Patented Mar. 16, 1886.

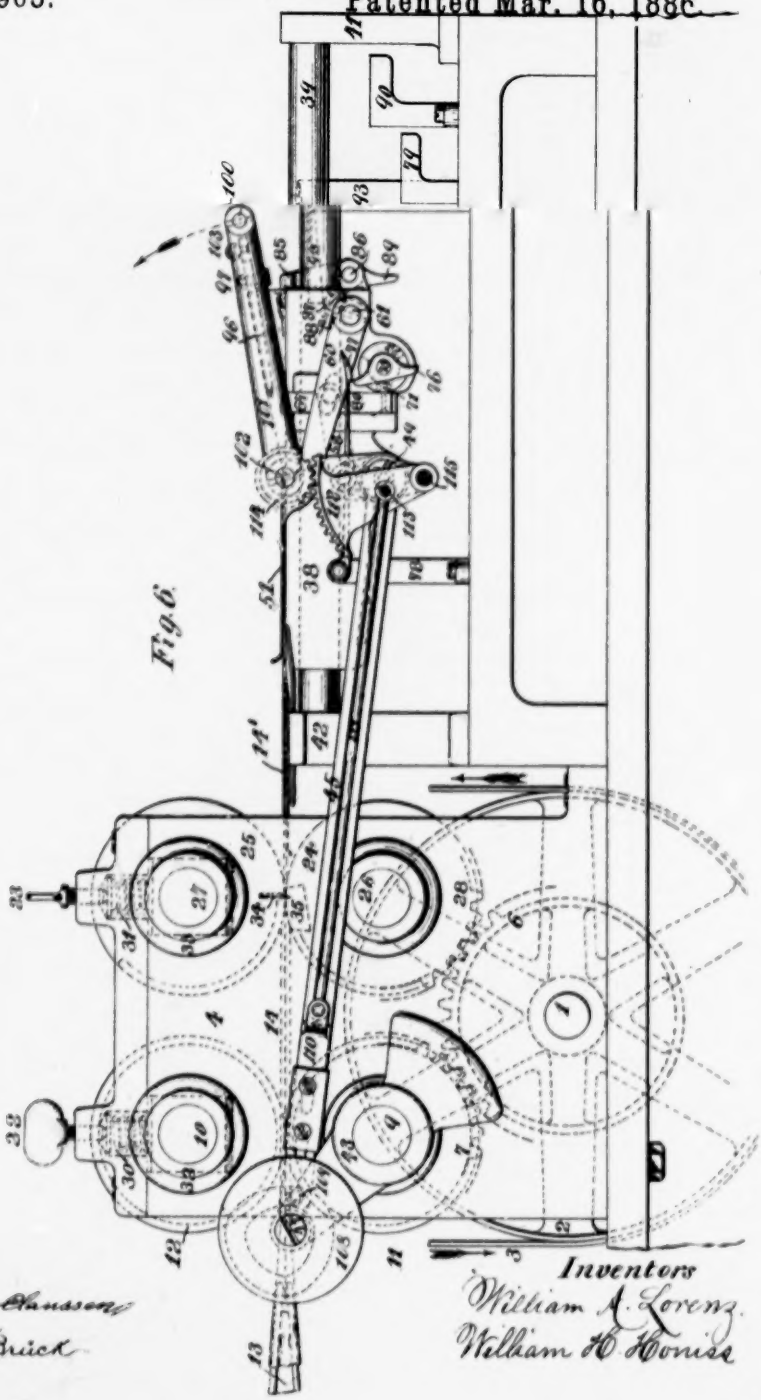

Fig. 6.

Witnesses
Edward F. Claussen
Henry F. Brick

Inventors
William A. Lorenz.
William H. Honiss

THE NORRIS PETERS CO., WASHINGTON, D. C.

(No Model.) 5 Sheets—Sheet 3.

W. A. LORENZ & W. H. HONISS.

PAPER BAG MACHINE.

No. 337,965. Patented Mar. 16, 1886.

Fig. 1

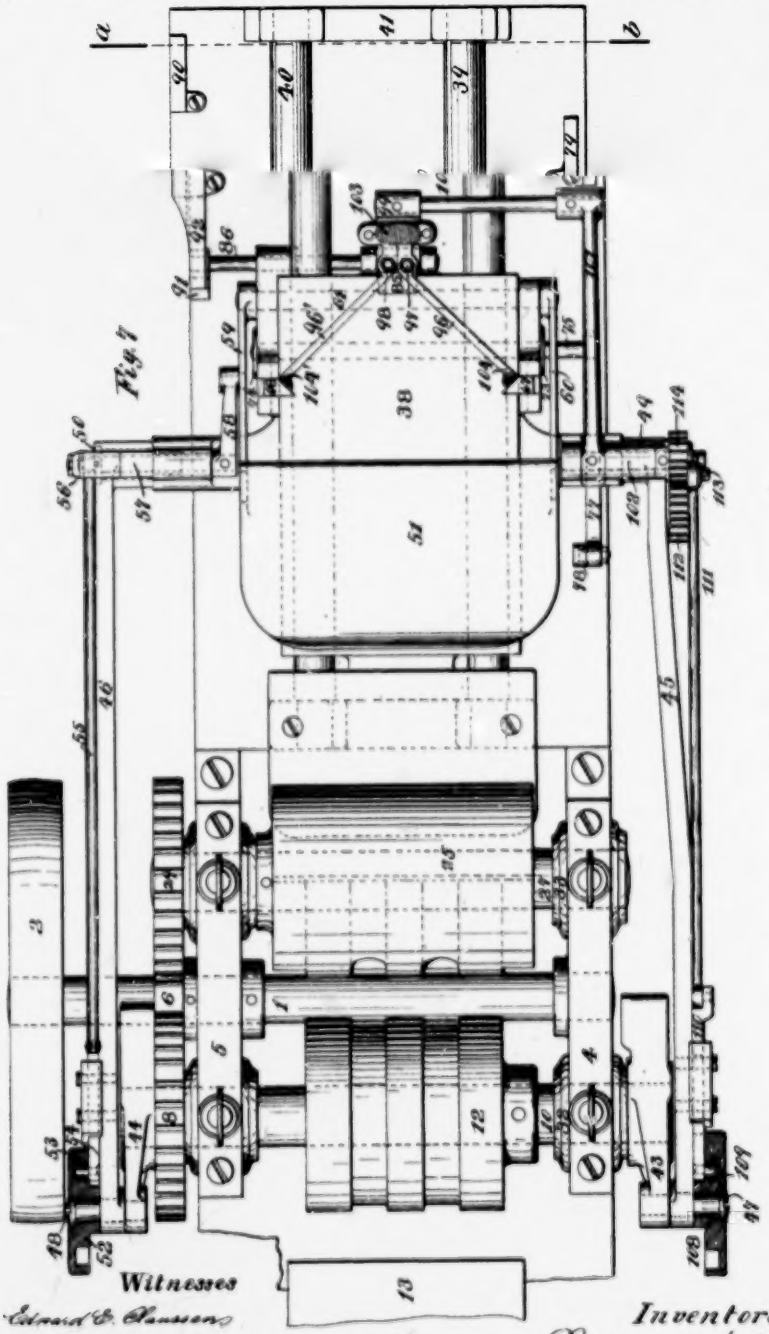

Witnesses

Edward C. Dawson

Henry P. Brück

Inventors

William A. Lorenz

William H. Honiss

(No Model.) 5 Sheets—Sheet 4.

W. A. LORENZ & W. H. HONISS.

PAPER BAG MACHINE.

No. 337,965. Patented Mar. 16, 1886.

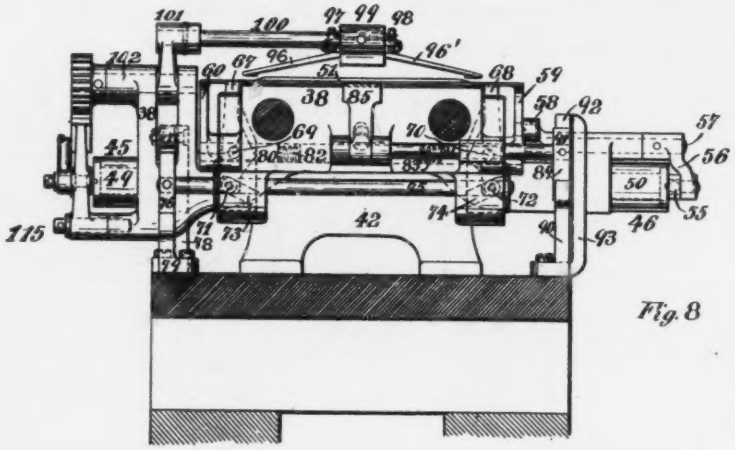

Fig. 8

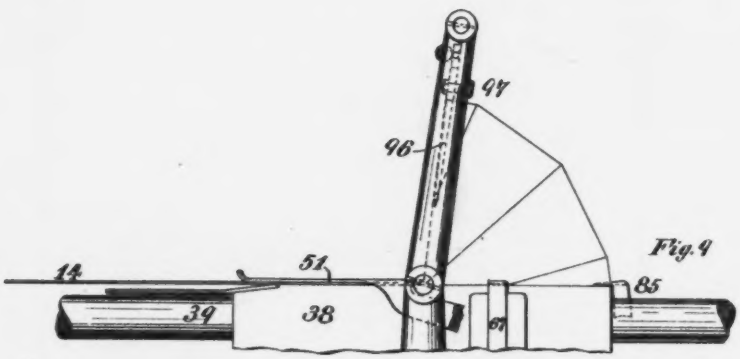

Fig. 9

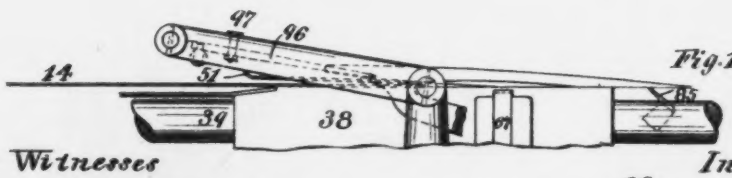

Fig. 10

Witnesses
Edward C. Claussen
Henry T. Brick

Inventors
William A. Lorenz
William H. Honiss

THE MORRIS PETERS CO., WASHINGTON, D. C.

(No Model.) 5 Sheets—Sheet 5.

W. A. LORENZ & W. H. HONISS.

PAPER BAG MACHINE.

No. 337,965. Patented Mar. 16, 1886.

Fig. 11

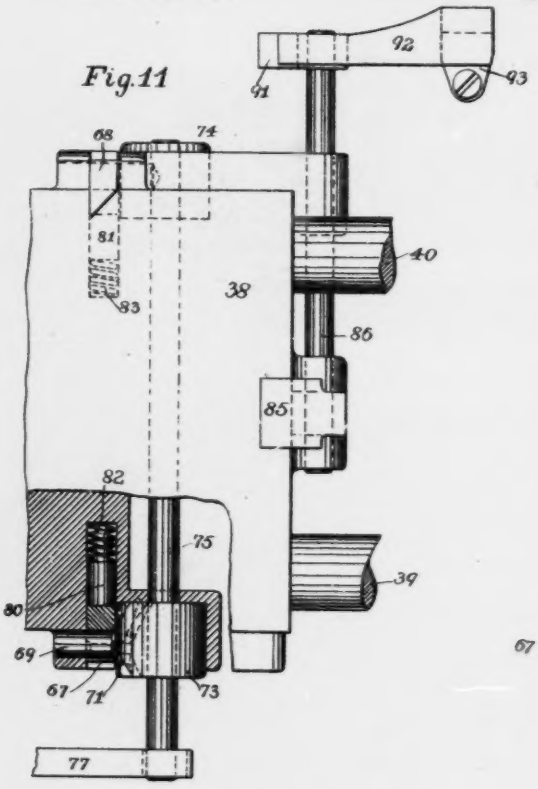

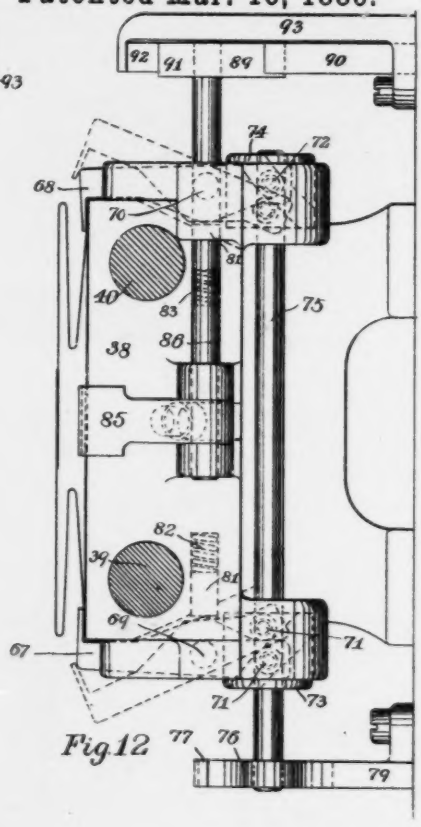

Fig. 12

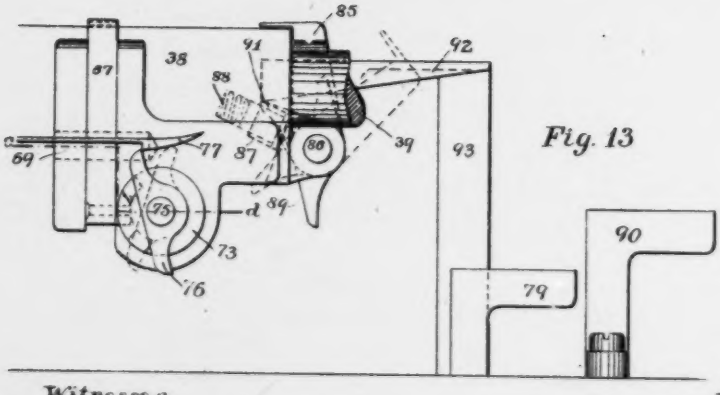

Fig. 13

Witnesses.

Edward E. Claussen

Henry T. Brück

Inventors.

William A. Lorenz

William H. Honiss

UNITED STATES PATENT OFFICE.

WILLIAM A. LORENZ AND WILLIAM H. HONISS, OF HARTFORD, CONNECTICUT, ASSIGNORS TO FELIX W. LEINBACH AND CLARENCE A. WOLLE, OF BETHLEHEM, PENNSYLVANIA.

PAPER-BAG MACHINE.

SPECIFICATION forming part of Letters Patent No. 337,965, dated March 16, 1886.

Application filed February 24, 1885. Serial No. 156,866. (No model.)

To all whom it may concern:

Be it known that we, WILLIAM A. LORENZ and WILLIAM H. HONISS, both of Hartford, Connecticut, have invented certain new and useful Improvements in Paper-Bag Machines, of which the following description and claims constitute the specification, and which are illustrated by the accompanying five sheets of drawings.

This machine manufactures continuous tucked paper tubing into paper-bag blanks, which have one end folded down into the diamond shape shown in Figure 5 of the drawings, and which may be manufactured into paper bags by means of machinery shown in our application of May 15, 1884, for Letters Patent of the United States. The diamond-folding mechanism of this machine differs materially from any other known to us.

Fig. 1 of the drawings is a plan view of a section of tucked paper tubing of suitable length for a bag-blank, and Fig. 2 is an end view of the same. Fig. 3 is a plan view of the tube of Figs. 1 and 2, and of parts of the diamond-folding mechanism of this machine in position to operate upon that tube. Fig. 4 is a plan view of what is shown in Fig. 3 after the diamond-folding mechanism has done its work. Fig. 5 is a plan view of the folded blank of Fig. 4, being withdrawn from the diamond-folding mechanism. Fig. 6 is a side view of our new paper-bag machine. Fig. 7 is a plan view of the same. Fig. 8 is a sectional view of the machine, looking to the left from the line *a b* of Fig. 7. Fig. 9 is a side view of parts of the diamond-folding mechanism when partly turned over in doing its work. Fig. 10 is a side view of the same when fully turned over and in the position relatively to the blank shown in Fig. 5. Fig. 11 is a fragmentary plan view of parts of the mechanism shown in complete plan view in Fig. 7. Fig. 12 is an enlarged detached view of parts of the mechanism shown in Fig. 8. Fig. 13 is a view of the left-hand end of what is shown in plan view in Fig. 11 and in elevation in Fig. 12.

The shaft 1 is driven by the pulley 2 in the direction indicated by the arrows adjacent to the belt in Fig. 6, and it runs in the uprights 4 and 5 and carries the intermediate gear, 6. That gear meshes with the gear 7 on the shaft 9, and the gear 7 meshes with the gear 8 on the shaft 10. The shafts 9 and 10 carry the drawing-rolls 11 and 12, which rolls draw the tucked paper tube into the machine from an adjacent machine adapted to manufacture the same, and the extremity of the tube-former of which is indicated in Figs. 6 and 7 by the numeral 13. The tucked paper tube 14 has the tucks 15 and 16, the lower folds, 17 and 18, the upper folds, 19 and 20, and the seam 21. The cutting-rolls 24 and 25 are keyed to the shafts 26 and 27, respectively, and receive motion from the gear 6, which meshes with the gear 28 on the shaft 26, while the gear 28 meshes with the gear 29 on the shaft 27. The upper drawing-roll, 12, and the upper cutting-roll, 25, are subject to the downward pressure of the springs 30 and 31, respectively, which springs bear downward upon the sliding boxes 32 and 33, respectively, and are adjustable by the thumb-screws 22 and 23, respectively. Similar springs, boxes, and thumb-screws are also used on the other side of the machine to press downward upon the other ends of the upper drawing-roll and cutting-roll. The knife 34 is fixed in the periphery of the cutting-roll 25, and lengthwise thereof, while the rubber pad 35 is fixed correspondingly in the periphery of the cutting-roll 24.

The drawing-rolls have annular recesses on their peripheries, and the cutting-rolls have corresponding recesses extending part way around their peripheries, as shown in Fig. 7, the object of which recesses is to give room for the passage of the six turns in the tucked paper tubing without flattening them down, and thus depriving them of their elasticity.

A reciprocating carriage, 38, slides on ways 39 and 40, supported by brackets 41 and 42. The carriage is driven by the cranks 43 and 44, keyed to the shaft 9, which cranks work the connecting-rods 45 and 46 through the crank-pins 47 and 48, respectively, and which connecting-rods work the carriage through the carriage-pins 49 and 50, respectively. The presser-plate 51 is placed upon the rear part of the carriage 38, and is operated by the cam

52, which cam is keyed to the crank-pin 48, and through the cam-roller 53 works the slide 54 and the connecting-rod 55. That rod is pivoted to the arm 56, which arm is keyed to the shaft 57, and which shaft carries on its inner end the arm 58. That arm has a pivot projecting at right angles therewith from its inner side near its end, and that pivot works in a longitudinal slot in the arm 59. The latter and a corresponding arm, 60, are both keyed to the shaft 61, which oscillates in bearings in the carriage 38. The extremities of the arms 59 and 60 are fastened to the forward corners, respectively, of the presser-plate 51. The bevel-pointed side grippers, 67 and 68, are pivoted to the carriage 38 on pins 69 and 70, respectively, so as to vibrate crosswise of the carriage. Those grippers are caused to vibrate by the rollers 71 and 72, respectively, running in cam-grooves on the peripheries of the cylindrical cams 73 and 74, respectively, which cams are keyed to the shaft 75. A dog, 76, is also keyed to the shaft 75, and operates to oscillate the same whenever by the forward motion of the carriage 38 the upper end of the dog is brought into contact with and caught by the spring-hook 77, which spring-hook is attached at its other end to the bracket 78. The presser-bolts 80 and 81 are pressed against the inner sides of the grippers 67 and 68, respectively, by the springs 82 and 83, respectively, in such a way as to hold the grippers down upon the top of the carriage whenever the adjacent angular projections of the grippers, respectively, are below the centers of the pins 69 and 70, respectively. The abutment 79 is fixed in a proper position to collide with the lower end of the dog 76 as the latter moves forward with the carriage. The front gripper, 85, is keyed to the shaft 86, and is provided with an angular projection adjacent to the head of the front presser-bolt, 87, which bolt is pressed against the gripper by the spring 88. The dog 89 is also keyed to the shaft 86, and it operates to open the gripper 85 by colliding with the abutment 90 whenever by the forward movement of the carriage it is brought in contact therewith. The upper end, 91, of the dog 89 operates to close the gripper 85 down upon the carriage 38 whenever at the first part of the forward stroke of the carriage that upper end is caught by the spring-hook 92, which hook is supported by the bracket 93. The fingers 96 and 96′ are pivoted at 97 and 98, respectively, to a swinging head, 99, which head is keyed to one end of the cross-arm 100. That cross-arm is keyed to the outer end of the swinging arm 101, and at right angles to the latter arm, which in turn is keyed to the shaft 102, and which shaft oscillates in bearings in upward projections of the carriage 38. A coiled spring, 103, connects the power ends of the fingers 96 and 96′ with a tension just sufficient to hold them closely together and the working ends apart, except when the latter are forced together by the withdrawal of the completed paper-bag blank from the carriage. The extremities of the working ends of the fingers 96 and 96′ are formed with right-angle corners 104 and 104′, respectively, which corners, when the working ends of the fingers are most widely separated, as in Figs. 3 and 4, are the same distance apart as are the inner corners of the upper folds of the tucked paper tubing. The cam 108 on the crank-pin 47 drives the roller 109 on the slide 110, which slide is connected by the rod 111 to the sector-gear 112 at the pivot 113. That sector-gear oscillates upon the pivot 115, and meshes with the pinion 104, which pinion is keyed to the shaft 102.

The mode of operation is as follows: The tucked paper tubing is continuously drawn into this machine by the drawing-rolls 11 and 12, and is projected by the rolls 24 and 25 under the uplifted presser-plate 51, and thence still farther forward upon the carriage 38, till the fingers 96 and 96′ enter the forward ends of the upper folds thereof, and the gripper 85 enters the forward end of the paper tubing at its longitudinal center and clasps it down upon the carriage 38, which at that moment has advanced through a portion of its forward stroke. Thereupon the knife 34 severs the bag-length 14′, which is in advance of it, at the same time that the presser-plate 51 presses that length firmly down upon the carriage 38, and at the same time that the side grippers, 67 and 68, enter the respective adjacent tucks of the bag-length, and press their lower folds down upon the carriage at the places indicated in Fig. 7. Then the arm 101 oscillates from the position shown in Fig. 6 to that shown in Fig. 9, and thence, without stopping, to that shown in Fig. 10. That movement carries with it the cross-arm 100, the swinging head 99, and the fingers 96 and 96′, and those fingers carry with them the upper ply of the forward end of the tucked-tube bag-length, and thus they turn it over upon itself against the forward edge of the presser-plate 51, while they also define the diagonal creases upon which the rear end of the diamond is folded down. The diagonal creases upon which the forward end of the diamond is folded down are defined by the lines of strain between the gripper 85 and the grippers 67 and 68, respectively, while the side creases of the diamond are defined by the lines of strain between the grippers 67 and 68, respectively, and the corners 104 and 104′, respectively, of the fingers 96 and 96′. While the above-described folding of the diamond is being done, the carriage travels to the forward limit of its stroke, and at that point the gripper 85 is removed from the bag-blank, and is thrown into the position shown in Fig. 10 by means of the abutment 90 colliding with the lower arm, 89, of that gripper, while the grippers 67 and 68 are removed sidewise and away from the bag-blank by means of the abutment 79 colliding with the lower end of the dog 76, and thus forcing the shaft 75 and the cams 73 and 74 to oscillate, and thus to force toward each

other the lower ends of the grippers, and while the presser-plate 51 is raised from the bag-blank by the action of the cam 52 through the roller 53, the slide 54, the rod 55, the arm 56, the shaft 57, the arm 58, and the arms 59 and 60. Thus released from the grippers and the presser-plate, the bag-blank may be withdrawn from the machine by any proper mechanism, which may also transfer it to other machinery for making the subsequent folds of the bottom of the bag. As the bag-blank is withdrawn, the diagonal folds of the rear end of the diamond force the working ends of the fingers 96 and 96′ together against the resistance of the spring 103; but when the fingers are released from the diamond that spring returns the fingers to their relative working positions. As the carriage makes its return-stroke, the fingers 96 and 96′ are swung back from the position shown in Fig. 10 to that shown in Fig. 6 by means of the cam 108 operating the roller 109, the slide 110, the rod 111, the sector-gear 112, the pinion 114, the shaft 102, the arm 101, the cross-arm 100, and the swinging head 99, which devices also caused the opposite swinging motion, heretofore described as operating to fold the diamond.

We do not herein claim the combination of the carriage 38, the gripper 67, the cam 73, the shaft 75, the dog 76, the hook-spring 77, and the abutment 79, because that combination is substantially covered by claim 2 of our application No. 156,865 for Letters Patent of the United States of America, executed on the same day and filed on the same day with this specification.

We claim as our invention—

1. The combination of the fingers 96 and 96′ with the spring 103, all constructed and operating together substantially as described.

2. The combination of the reciprocating carriage 38, the presser-plate 51, the side grippers, 67 and 68, and the front gripper, 85, all operating together substantially as described.

3. The combination of the reciprocating carriage 38, the presser-plate 51, the gripper 85, and the fingers 96 and 96′, substantially as described.

4. The combination of the reciprocating carriage 38, the fingers 96 and 96′, the gripper 85, and the grippers 67 and 68, all operating together to open out the end of the tucked paper tube, substantially as described.

5. The combination of the reciprocating carriage 38, the presser-plate 51, the gripper 85, the grippers 67 and 68, and the fingers 96 and 96′, all operating together to fold the forward end of the blank of Figs. 1 and 2 into the diamond shape of Fig. 5, all substantially as described.

WILLIAM A. LORENZ.
WILLIAM H. HONISS.

Witnesses:
ALBERT H. WALKER,
FRANK H. PIERPONT.

(No Model.) 4 Sheets—Sheet 1.

W. A. LORENZ & W. H. HONISS.

PAPER BAG MACHINE.

No. 337,966. Patented Mar. 16, 1886.

Fig. 3

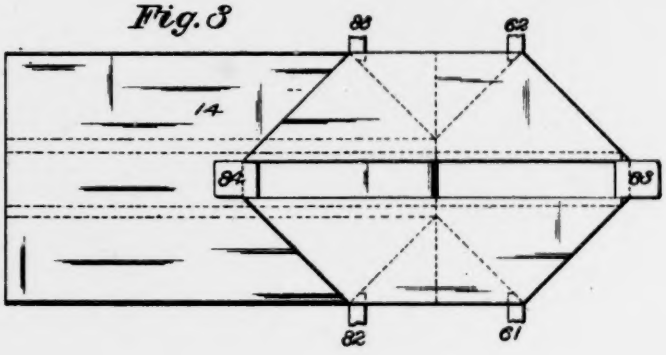

Fig. 1

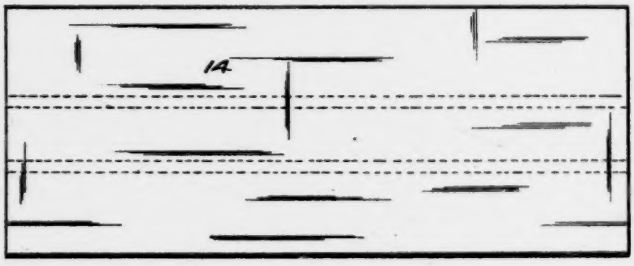

Fig 2

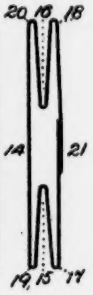

Fig. 4

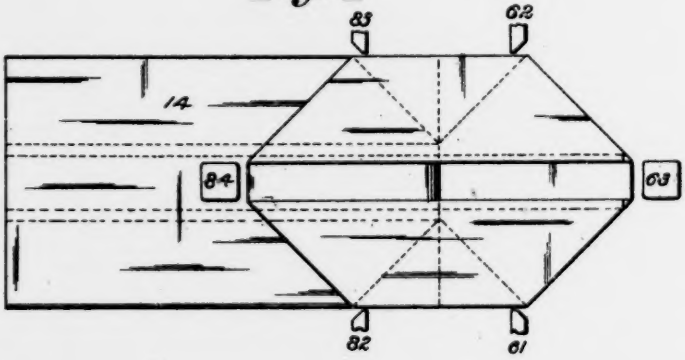

Witnesses:
Albert K. Walker
Willard Eddy

Inventors:
William A. Lorenz.
William H. Honiss.

(No Model.) 4 Sheets—Sheet 2.

W. A. LORENZ & W. H. HONISS.

PAPER BAG MACHINE.

No. 337,966. Patented Mar. 16, 1886.

Fig. 10

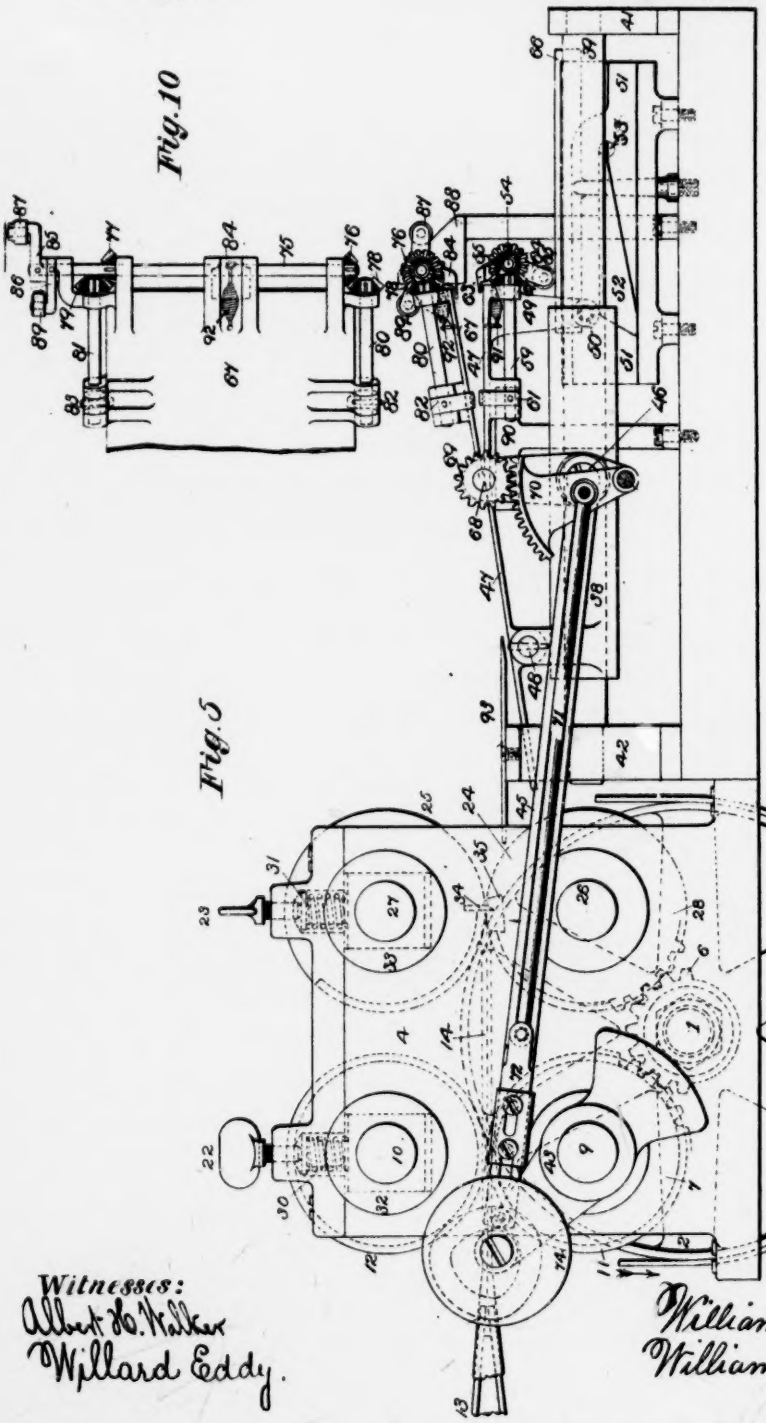

Fig. 5

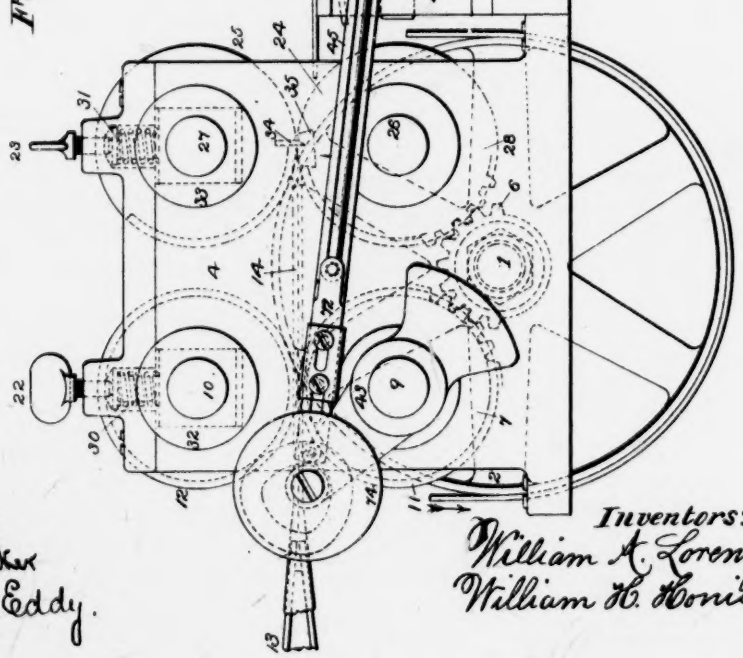

Witnesses:
Albert H. Walker
Willard Eddy.

Inventors:
William A. Lorenz
William H. Honiss.

(No Model.) 4 Sheets—Sheet 3.

W. A. LORENZ & W. H. HONISS.

PAPER BAG MACHINE.

No. 337,966. Patented Mar. 16, 1886.

Fig. 6

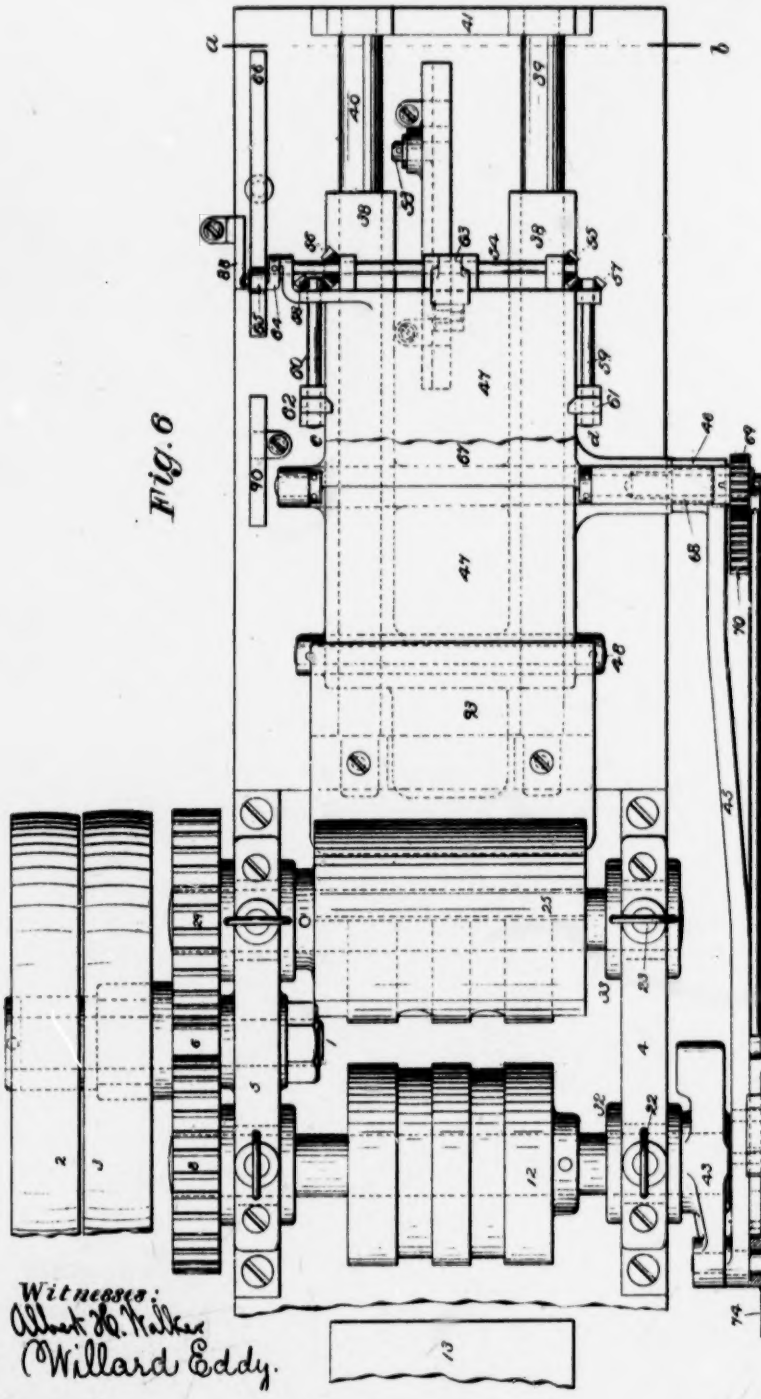

Witnesses:
Albert H. Walker
Willard Eddy.

Inventors:
William A. Lorenz
William H. Honiss

(No Model.) 4 Sheets—Sheet 4.

W. A. LORENZ & W. H. HONISS.

PAPER BAG MACHINE.

No. 337,966. Patented Mar. 16, 1886.

Fig. 7

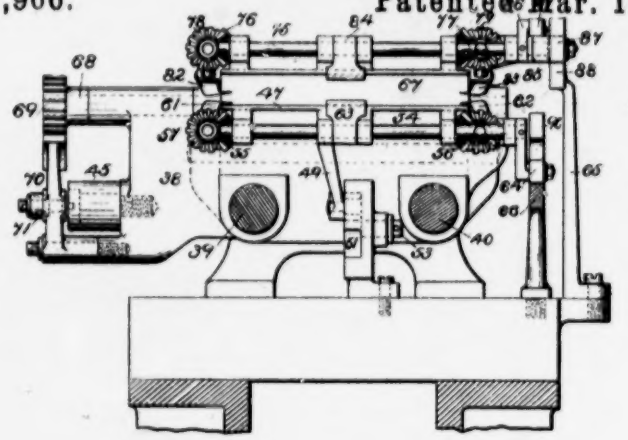

Fig. 8

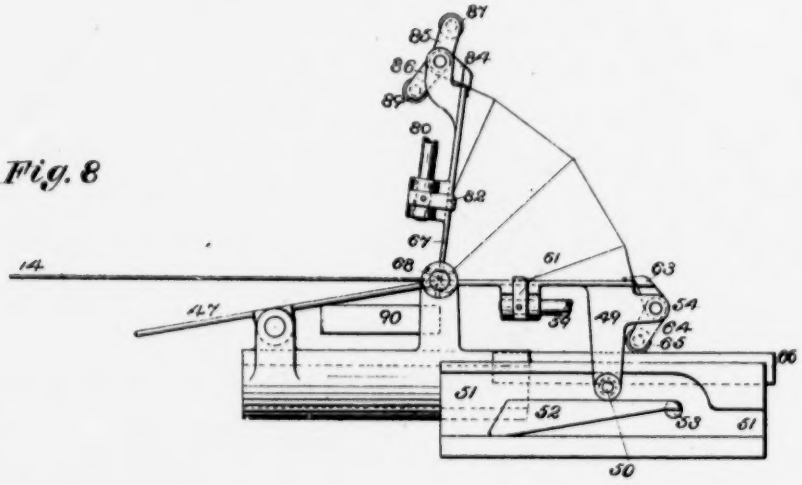

Fig. 9

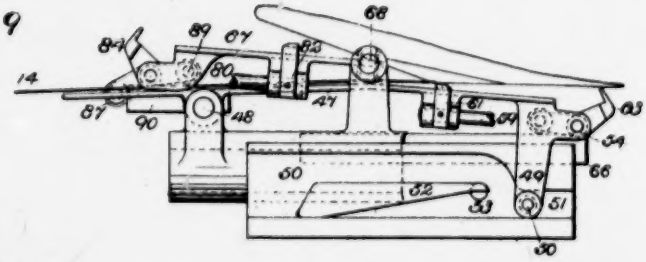

Witnesses:
Albert G. Walker
Willard Eddy.

Inventors:
William A. Lorenz.
William H. Honiss.

UNITED STATES PATENT OFFICE.

WILLIAM A. LORENZ AND WILLIAM H. HONISS, OF HARTFORD, CONNECTICUT, ASSIGNORS TO FELIX W. LEINBACH AND CLARENCE A. WOLLE, OF BETHLEHEM, PENNSYLVANIA.

PAPER-BAG MACHINE.

SPECIFICATION forming part of Letters Patent No. 337,966, dated March 16, 1886.

Application filed June 20, 1885. Serial No. 169,275. (No model.)

To all whom it may concern:

Be it known that we, WILLIAM A. LORENZ and WILLIAM H. HONISS, both of Hartford, Connecticut, have invented certain new and useful Improvements in Paper-Bag Machines, of which the following description and claims constitute the specification, and which are illustrated by the accompanying four sheets of drawings.

This machine manufactures continuous tucked paper tubing into paper-bag blanks, which have one end folded down into the diamond shape shown in Figure 4 of the drawings, and which may be manufactured into paper bags by means of machinery shown in our application of May 15, 1884, for Letters Patent of the United States. The diamond-folding mechanism of this machine is similar in many respects to that shown in our application of February 24, 1885, for Letters Patent of the United States for a machine to perform the same function, but in other respects it is substantially different from that and from every other mechanism known to us.

Fig. 1 of the drawings is a plan view of a section of tucked paper tubing of suitable length for a bag-blank, and Fig. 2 is an end view of the same. Fig. 3 is a plan view of the tube of Figs. 1 and 2 after one end thereof has been folded down into the desired diamond shape, but before the folding mechanism has been withdrawn therefrom. Fig. 4 is a plan view of the same after such withdrawal. Fig. 5 is a side view of this machine. Fig. 6 is a plan view of what is shown in Fig. 5, but with the oscillating presser-plate broken away on the line *c d* in order to show the parts below the same. Fig. 7 is a sectional view looking to the left from the line *a b* of Fig. 6. Fig. 8 is a side view of parts of the diamond-folding mechanism when partly turned over in doing its work. Fig. 9 is a side view of the same when fully turned over and in the position relative to the blank which is shown in Fig. 4. Fig. 10 is a plan view of the broken-away oscillating presser-plate and of its appurtenances.

The stud 1 has a bearing for the loose pulley 2 and another for the hub of the working-pulley 3. Both pulleys are driven in the direction indicated by the arrow adjacent to the belt shown in Fig. 5.

The numerals 4 and 5 indicate the upright sides of the frame of the machine. The gear 6 is fixed to the hub of the pulley 3 and meshes with the gear 7 on the shaft 9, while the gear 7 meshes with the gear 8 on the shaft 10. The shafts 9 and 10 carry the drawing-rolls 11 and 12, which rolls draw the tucked paper tubing into the machine from an adjacent machine adapted to manufacture the same. The extremity of the tube-former of such a machine is shown in Figs. 5 and 6, and is indicated by the numeral 13. The tucked paper tube 14 has the tucks 15 and 16, the lower folds, 17 and 18, the upper folds, 19 and 20, and the seam 21. The cutting-rolls 24 and 25 are keyed to the shafts 26 and 27, respectively, and receive motion from the gear 6, meshing with the gear 28 on the shaft 26, while the gear 28 meshes with the gear 29 on the shaft 27. The upper drawing-roll, 12, and the upper cutting-roll, 25, are subjected to the downward pressure of the springs 30 and 31, respectively, which springs bear downward upon the sliding boxes 32 and 33, respectively, and are adjustable by the thumb-screws 22 and 23, respectively. Similar springs, boxes, and thumb-screws are also used on the other side of the machine to press downward upon the other ends of the upper drawing-roll and cutting-roll. The knife 34 is fixed in the periphery of the cutting-roll 25, and lengthwise thereof, while the rubber pad 35 is fixed correspondingly in the periphery of the cutting-roll 24.

The drawing-rolls have annular recesses on their peripheries, and the cutting-rolls have corresponding recesses extending part way around their peripheries, as shown in Fig. 6. The object of these recesses is to give room for the passage of the six turns in the tucked paper tubing without flattening them down, and thus depriving them of their elasticity.

A reciprocating carriage, 38, slides on ways 39 and 40, supported by brackets 41 and 42. The carriage is driven by the crank 43 through the crank-pin 44, the connecting-rod 45, and the carriage-pin 46. The lower presser-plate, 47,

is attached to the carriage by the pivot 48, near its rear end, while its forward end is supported by the arm 49. The lower end of that arm is provided with the roller 50, and that roller runs forward and backward in the groove 51, passing over the trip-cam 52 in its forward movement and under that cam during its backward motion. The cam is hinged by the pivot 53 to the inner surface of the groove, so that it may oscillate on a vertical plane parallel with that surface. The shaft 54 oscillates in brackets which project forward and downward from the forward end of the lower presser-plate, 47. The bevel-gears 55 and 56 are keyed to that shaft, and mesh with the bevel-gears 57 and 58, respectively, which are respectively keyed to the shafts 59 and 60, and which shafts turn in brackets projecting downward from the lower side borders of the lower presser-plate, 47. The shafts 59 and 60 carry the lower side grippers, 61 and 62, respectively, while the shaft 54 carries the lower front grippers, 63. All these three shafts are oscillated in unison by the crank 64. That crank is provided with the roller 65, projecting horizontally from its outer end, and running upon the level rail 66. The upper and oscillating presser-plate, 67, is attached to the carriage by the pivot 68 at its rear edge, and is made to oscillate by the gear 69, the sector-gear 70, the connecting-rod 71, the slide 72, the roller 73, and the cam 74, which cam is fixed to the crank-pin 44. The range of oscillation of the upper presser-plate is from the position shown in Fig. 5 to that shown in Fig. 9. The shaft 75 oscillates in brackets projecting forward and upward from the forward edge of the upper and oscillating presser-plate, 67. The bevel-gears 76 and 77 are keyed to that shaft and mesh with the bevel-gears 78 and 79, respectively, which gears are respectively keyed to the shafts 80 and 81, and which shafts turn in brackets projecting upward from the upper side borders of the upper presser-plate, 67. The shafts 80 and 81 carry the upper side grippers, 82 and 83, respectively, while the shaft 75 carries the upper front gripper, 84. All three of these shafts are oscillated in unison by the arms 85 and 86, alternately. The arm 85 is provided with the roller 87, projecting horizontally from its outer end and striking upon the rail 88. The arm 86 is provided with the roller 89, striking upon the rail 90. The springs 91 and 92 act upon the grippers 63 and 84, respectively, and through them and the lower and upper shafts and bevel-gears, respectively, upon the lower and upper side grippers, in such a way as to keep all the grippers closed upon their respective presser-plates, except when such action is prevented by the roller 65 colliding with the rail 66, or by the roller 87 colliding with the rail 88, or by the roller 89 colliding with the rail 90, as the case may be. The platform 93 supports the paper tubing while it passes from the cutting-rolls to the presser-plates.

The mode of operation is as follows: The tucked paper tubing is continuously drawn into the machine by the drawing-rolls 11 and 12, and is projected into the space which is between the rear edge of the upper presser-plate, 67, and the upper side of the lower presser-plate, 47, when the roller 50 rests upon the lower side of the groove 51, and is projected still farther forward till its forward end reaches the forward borders of the two presser-plates. Shortly before that moment of time the carriage 38 begins its forward movement, and that movement forces the roller 50 to mount upward along the left-hand inclined end of the cam 52 to the position shown in Fig. 5, and also releases the roller 65 from downward pressure upon the rail 66. That forcing upward of the roller 50 raises the presser-plate 47 to the position indicated in Fig. 5, and thus clasps the paper tubing between its upper side and the rear edge of the upper presser-plate, and that releasing of the roller 65 allows the spring 91 to oscillate the shaft 54, and by so doing to force the gripper 63 to clasp the forward end of the lower ply of the paper tubing down upon the forward border of the lower presser-plate, and also to force the grippers 61 and 62 to clasp the lower folds of the paper tubing down upon the side borders of that presser-plate. When the forward end of the paper tubing reaches the forward borders of the two presser-plates, the sector 70 begins its forward movement, and thus raises the upper presser-plate upon its pivot, and also raises the roller 87 from the rail 88, and thus allows the spring 92 to oscillate the shaft 75, and by so doing to force the gripper 84 to clasp the forward end of the upper ply of the tucked paper tubing up against the forward border of the upper presser-plate, and to force the grippers 82 and 83 to clasp the upper folds, 19 and 20, respectively, up against the respective side borders of that presser-plate. Then the knife 34 severs a bag-length from the paper tubing, and as the carriage 38 and sector 70 proceed still farther on their forward movement the upper presser-plate continues to oscillate upon its pivot from the position shown in Fig. 5, through that shown in Fig. 8, nearly to that shown in Fig. 9. Thus the grippers 82, 83, and 84 act against the grippers 61, 62, and 63 to open out the end of the bag-length of Figs. 1 and 2 into the diamond form of Fig. 3. Then the roller 50 passes off from the right-hand end of the cam 52 to the bottom of the groove 51, and in so doing depresses the lower presser-plate, so that it no longer clasps the bag-blank between it and the pivoted edge of the upper presser-plate, and also forces the roller 65 hard down upon the rail 66, thus lifting the grippers 61, 62, and 63 against the action of the spring 91 from pressing down upon the bag-blank. At the same time the roller 89 collides with the rail 90, and thus lifts the grippers 82, 83, and 84 against the resistance of the spring 92 from pressing any

longer those places in the bag-blank which they have clasped upon the borders of the presser-plate 67. Thus released from all the grippers and from being clasped between the two presser-plates, the bag-blank may be withdrawn from the machine by any proper mechanism, which may also transfer it to other machinery for making the subsequent folds of the bottom of the bag. Then the carriage 38 and the sector 70 make their backward motions, the roller 50 passing under the cam 52, and thus holding the lower presser-plate away from the pivoted edge of the upper presser-plate, in order to give abundant entrance to the new end of the tucked paper tubing, and also holding all the lower grippers open by means of the collision of the roller 65 with the rail 66, and the roller 87 colliding at the end of the movement with the rail 88, and thus opening all the upper grippers for the reception of the upper ply and upper folds of the bag-blank next to be operated upon.

We do not herein claim the combination of the carriage 38, a presser-plate pressing downward upon the carriage, two grippers pressing downward upon the side borders of the upper surface of the carriage, and two pairs of grippers oscillating in an arc of a circle above the carriage, that combination being covered by claim 4 of our application No. 156,865 for Letters Patent of the United States of America, filed February 24, 1885.

We claim as our invention—

1. The combination of the side grippers, 61 and 62, the front gripper, 63, the shafts 54, 59, and 60, the bevel-gears 55, 56, 57, and 58, the arm 64, the rail 66, and the spring 91, all substantially as described.

2. The combination of the presser-plate 47, oscillating on the pivot 48, and the presser-plate 67, oscillating on the pivot 68, substantially as described.

3. The combination of the presser-plate 47, provided with the grippers 61, 62, and 63, with the presser-plate 67, provided with the grippers 82, 83, and 84, substantially as described.

4. The combination of a presser-plate, oscillating on a pivot, and two side grippers and one front gripper clasping a paper tube to that presser-plate, all substantially as described.

WILLIAM A. LORENZ.
WILLIAM H. HONISS.

Witnesses:
ALBERT H. WALKER,
WILLARD EDDY.

(No Model.) 14 Sheets—Sheet 1.

W. A. LORENZ & W. H. HONISS.

PAPER BAG MACHINE.

No. 361,951. Patented Apr. 26, 1887.

Fig. 1

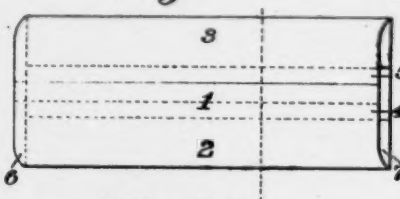

Fig. 3

Fig. 14

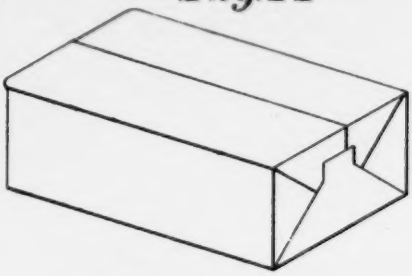

Fig. 2

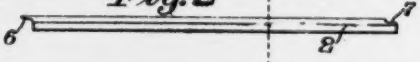

Fig. 4

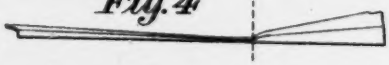

Fig. 6

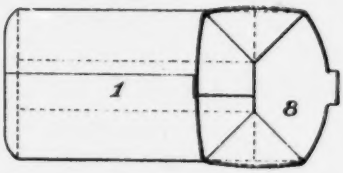

Fig. 5

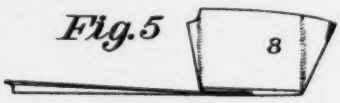

Fig. 8

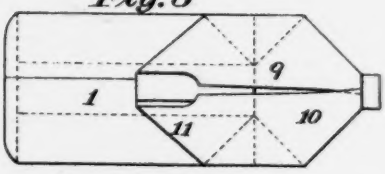

Fig. 7

Fig. 10

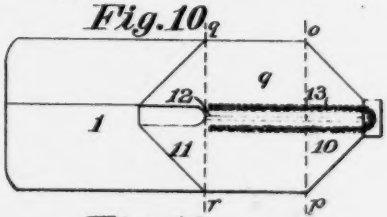

Fig. 9

Fig. 11

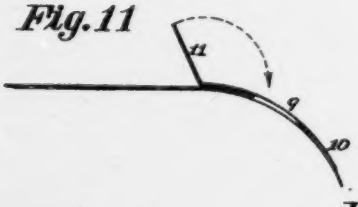

Fig. 12

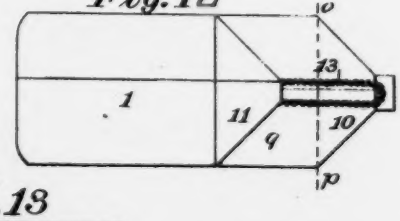

Fig. 13

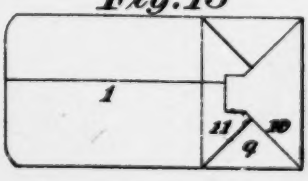

Witnesses:
Henry T. Brick
Edward E. Claussen

Inventors:
William A. Lorenz
William H. Honiss.

14 Sheets—Sheet 2.

W. A. LORENZ & W. H. HONISS.

PAPER BAG MACHINE.

No. 361,951. Patented Apr. 26, 1887.

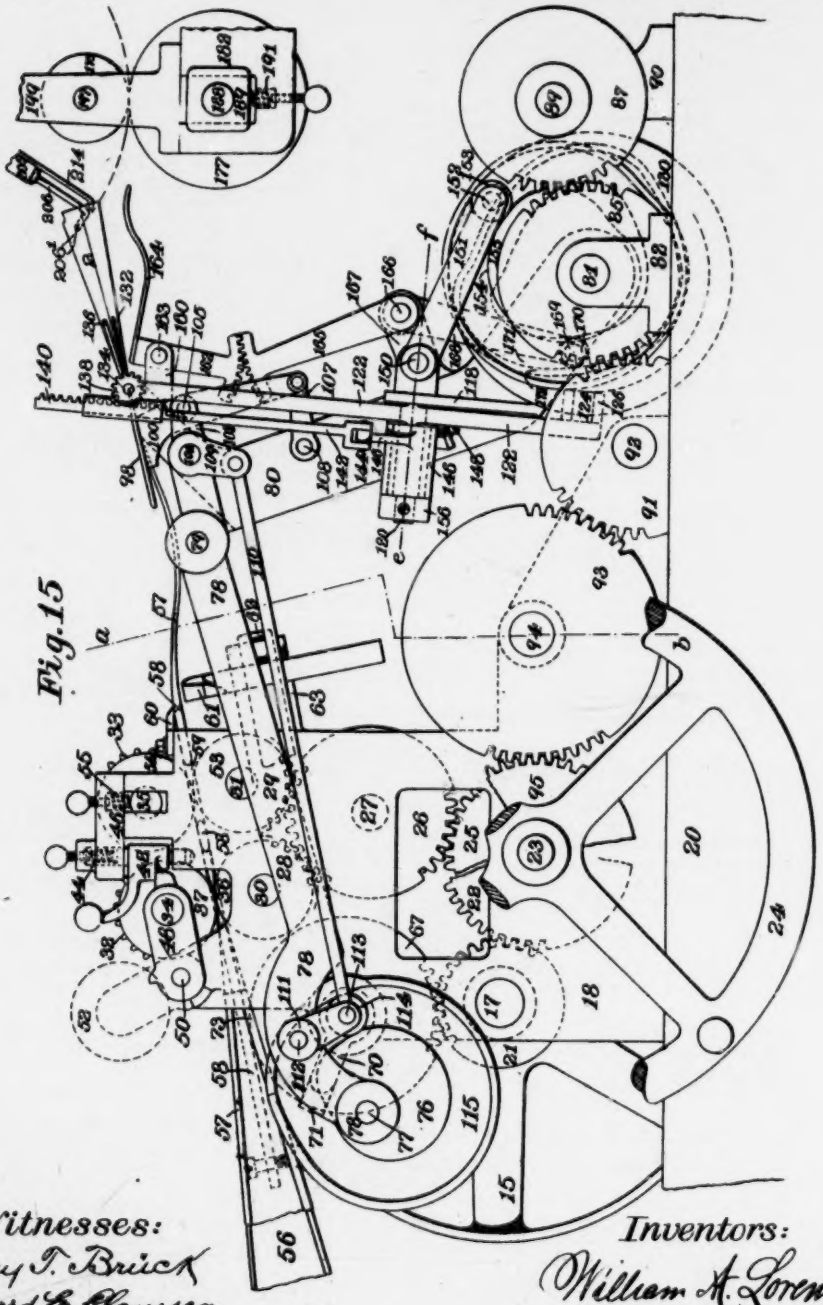

Fig. 15

Witnesses:
Henry T. Brick
Edward E. Clausen

Inventors:
William A. Lorenz
William H. Honiss

(No Model.)

14 Sheets—Sheet 3.

W. A. LORENZ & W. H. HONISS.

PAPER BAG MACHINE.

No. 361,951. Patented Apr. 26, 1887.

Fig. 16

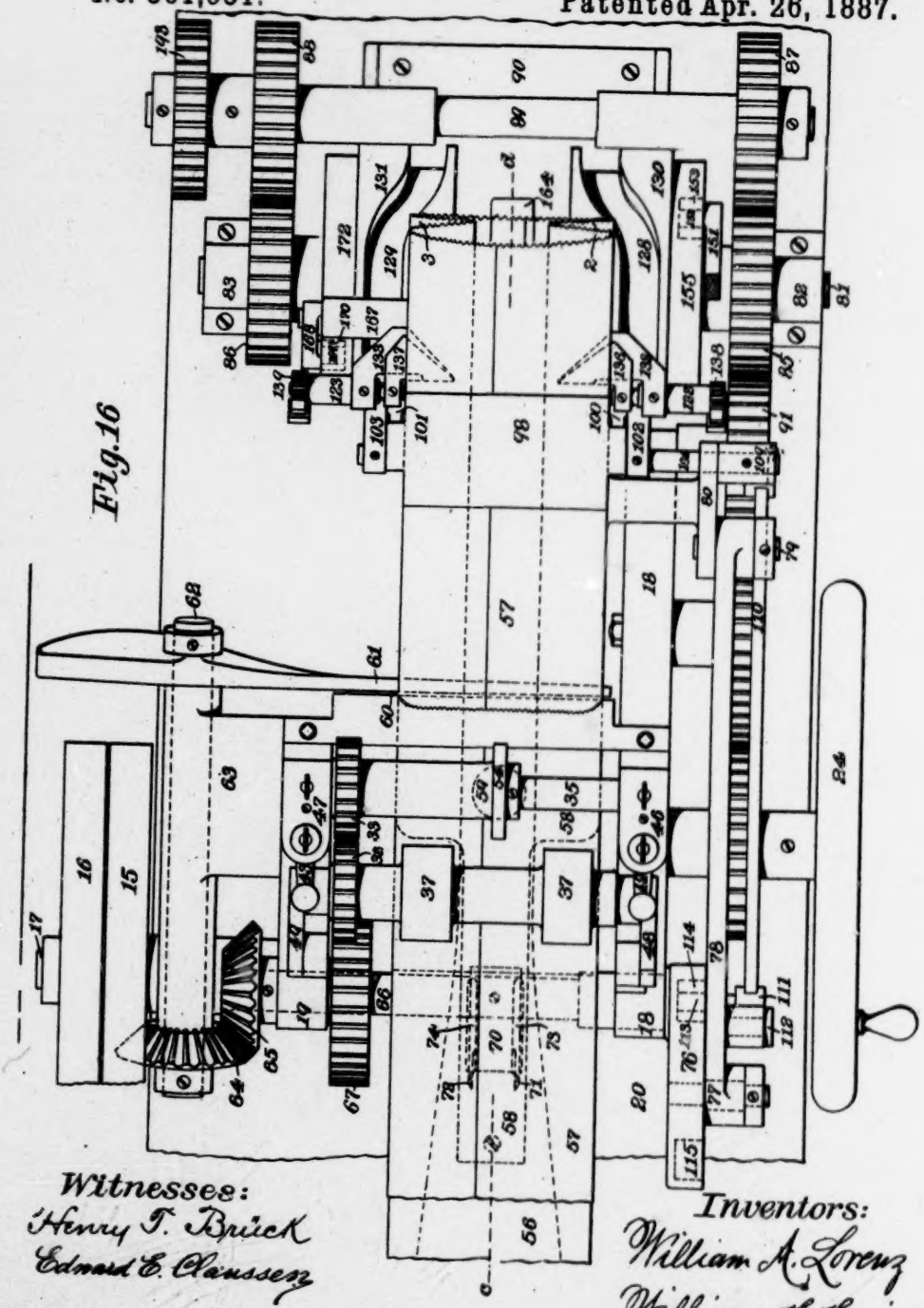

Witnesses:
Henry T. Brick
Edward E. Claussen

Inventors:
William A. Lorenz
William H. Honiss

(No Model.)

1. Sheets—Sheet 4.

W. A. LORENZ & W. H. HONISS.

PAPER BAG MACHINE.

No. 361,951. Patented Apr. 26, 1887.

Fig. 17

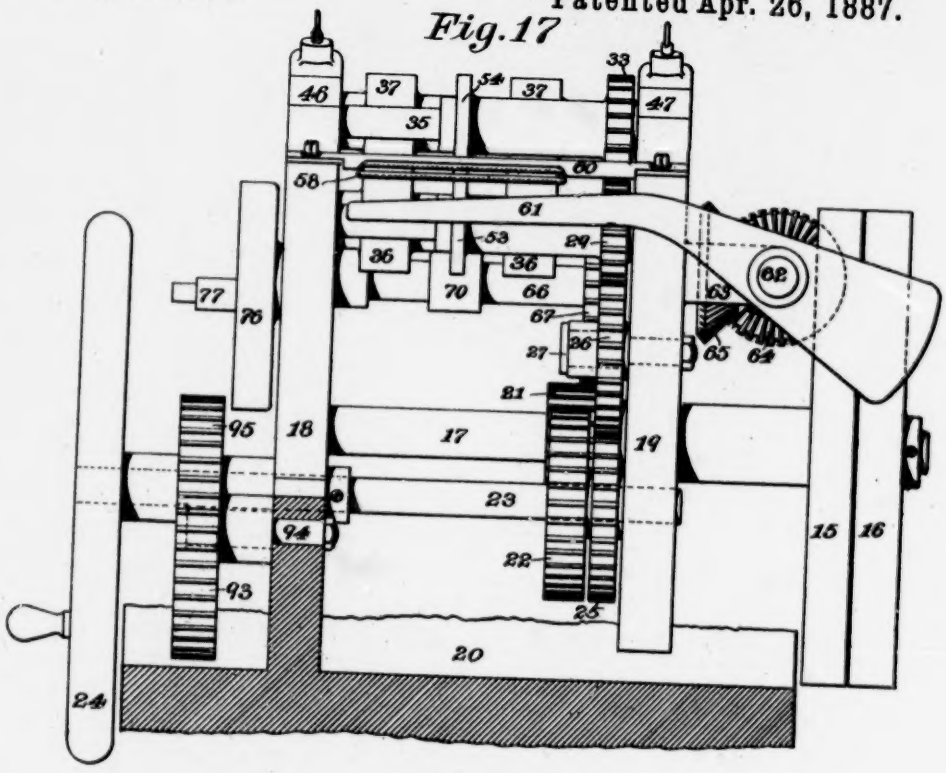

Fig. 18

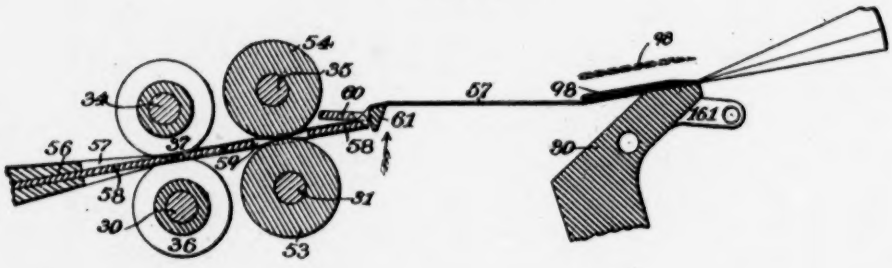

Witnesses:
Henry T. Brück
Edward E. Claussen

Inventors:
William A. Lorenz
William H. Honiss

(No Model.)

14 Sheets—Sheet 5.

W. A. LORENZ & W. H. HONISS.

PAPER BAG MACHINE.

No. 361,951. Patented Apr. 26, 1887.

Fig. 19

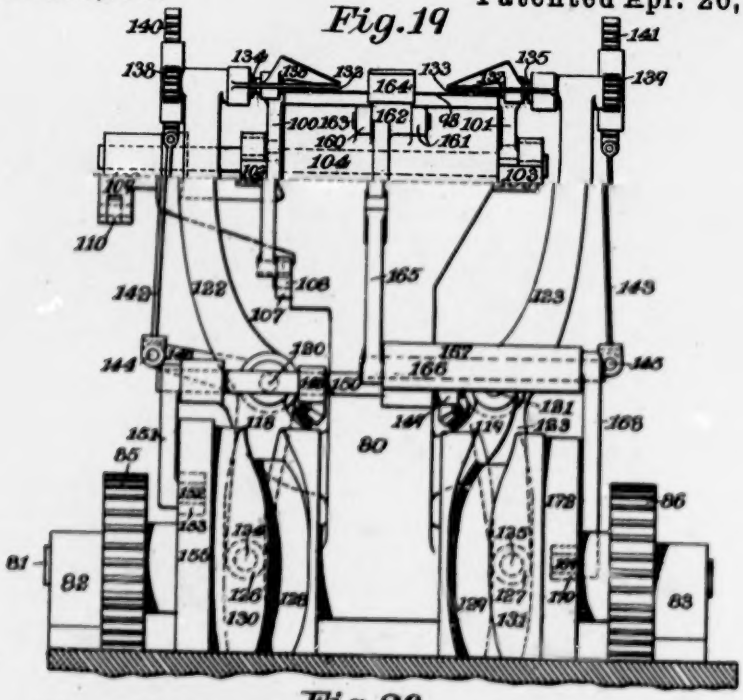

Fig. 20

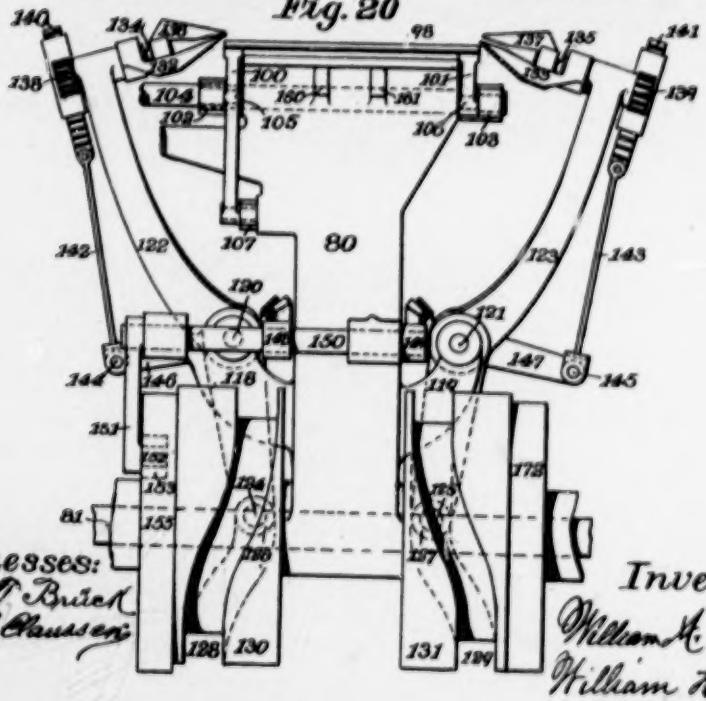

Witnesses:
Henry T. Brück
Edward E. Claussen

Inventors:
William A. Lorenz,
William H. Honiss

(No Model.)

14 Sheets—Sheet 6.

W. A. LORENZ & W. H. HONISS.

PAPER BAG MACHINE.

No. 361,951 Patented Apr. 26, 1887.

Fig. 21

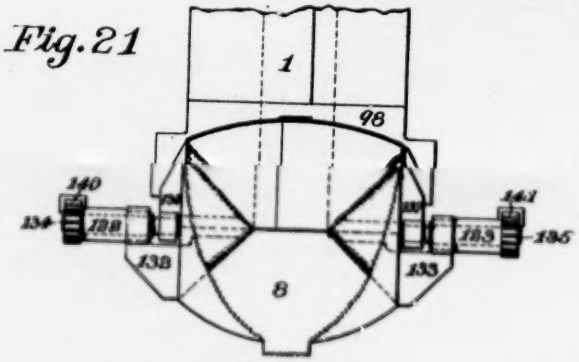

Fig. 22

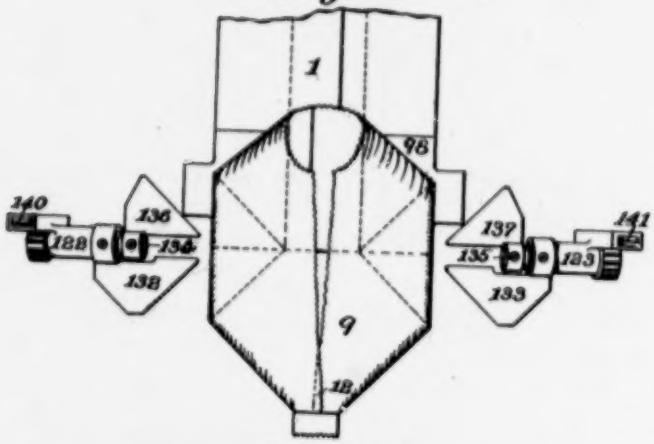

Fig. 23

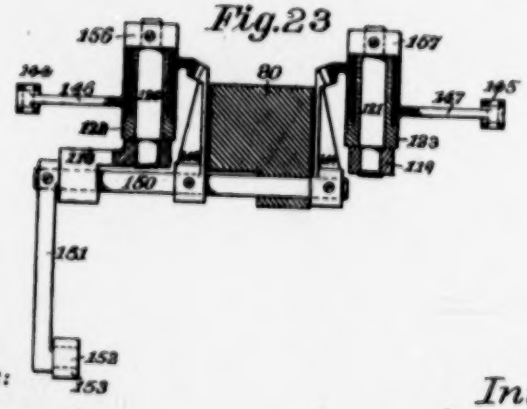

Witnesses:
Henry T. Brück
Edward S. Chaussey

Inventors:
William A. Lorenz
William H. Honiss

(No Model.)

14 Sheets—Sheet 7.

W. A. LORENZ & W. H. HONISS.

PAPER BAG MACHINE.

No. 361,951. Patented Apr. 26, 1887.

Fig. 24

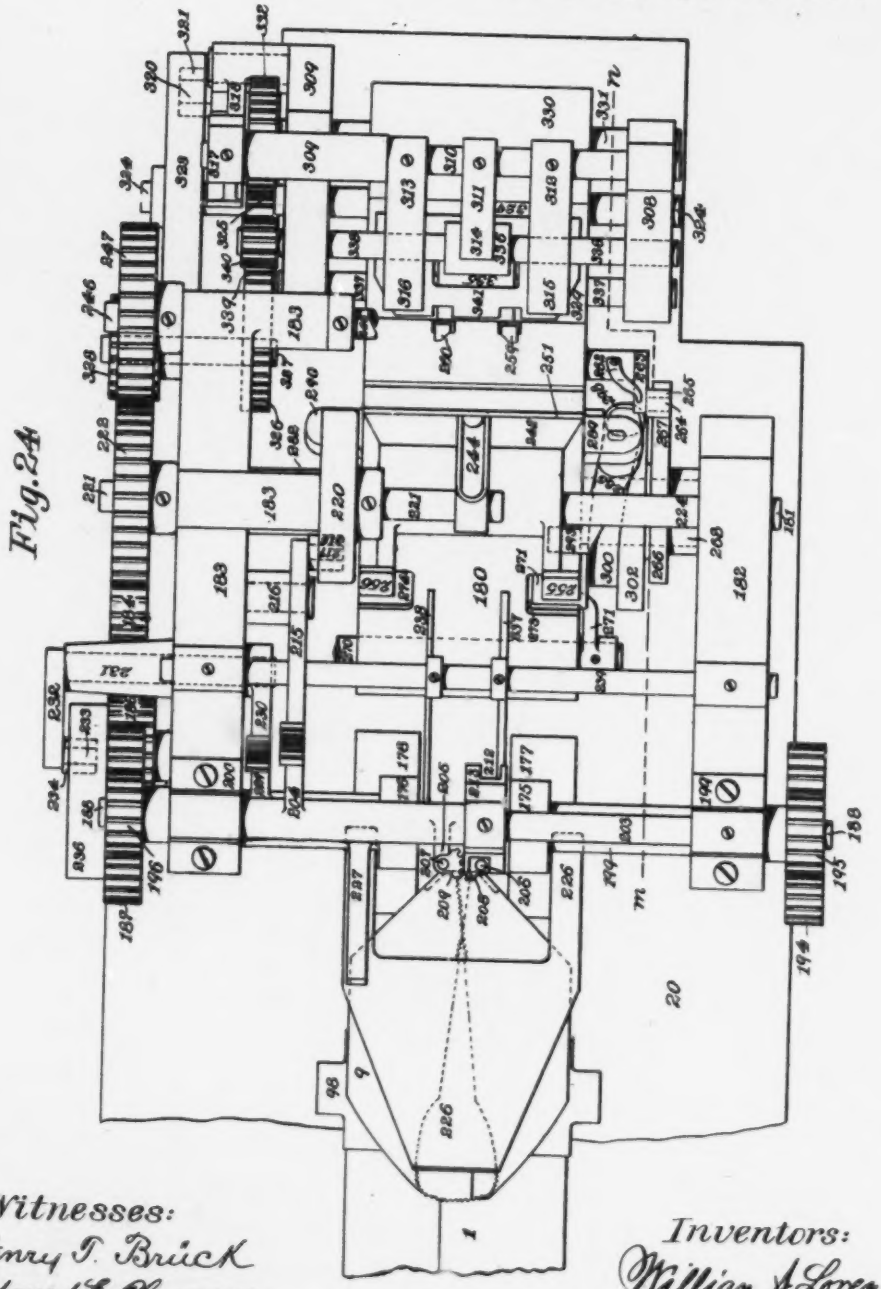

Witnesses:
Henry T. Brück
Edward E. Clanssey

Inventors:
William A. Lorenz
William H. Honiss

(No Model.)

14 Sheets—Sheet 8.

W. A. LORENZ & W. H. HONISS.

PAPER BAG MACHINE.

No. 361,951. Patented Apr. 26, 1887.

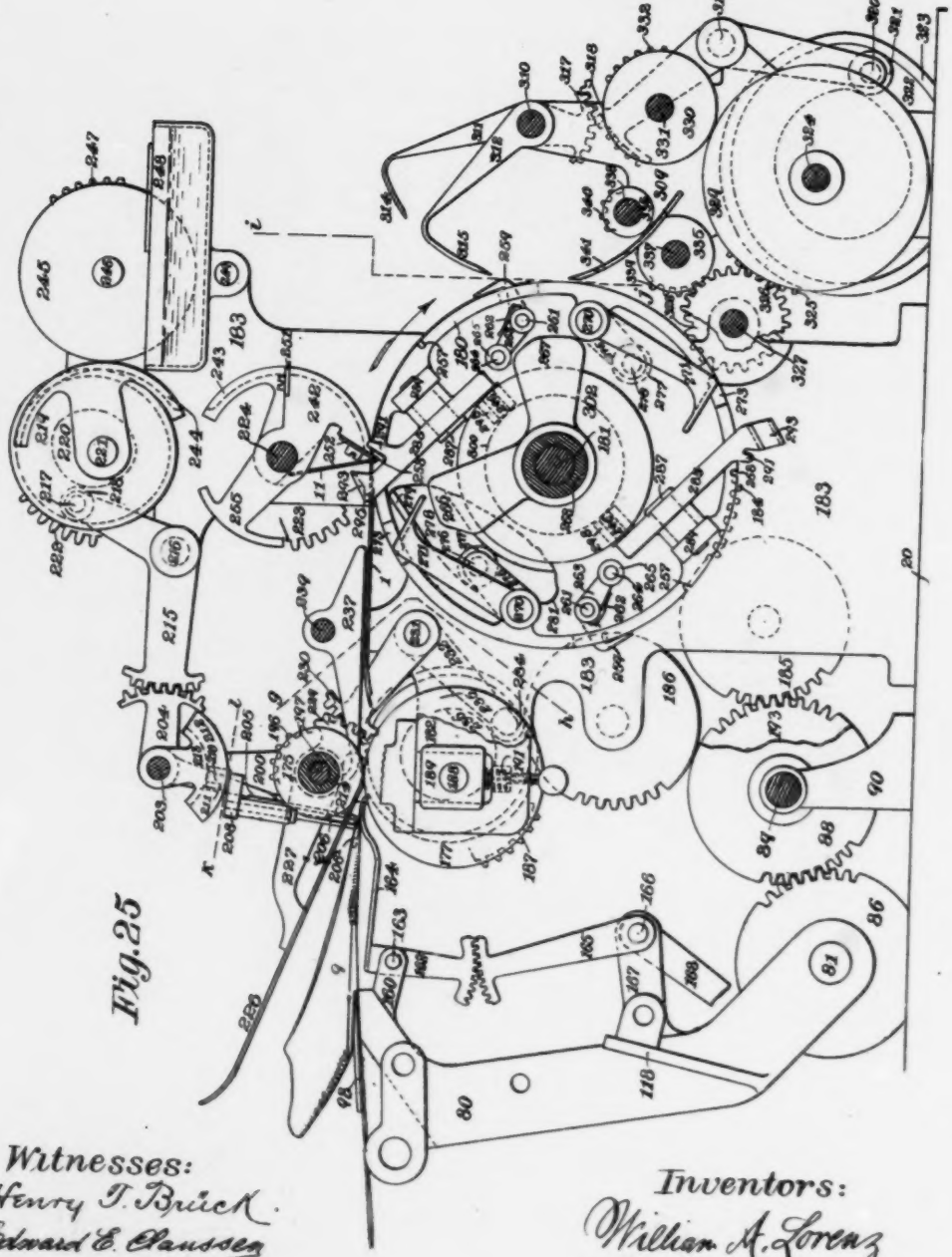

Fig. 25

Witnesses:
Henry T. Brück.
Edward E. Haussen

Inventors:
William A. Lorenz
William H. Honiss

(No Model.)

14 Sheets—Sheet 9

W. A. LORENZ & W. H. HONISS.

PAPER BAG MACHINE.

No. 361,951. Patented Apr. 26, 1887.

Fig. 26

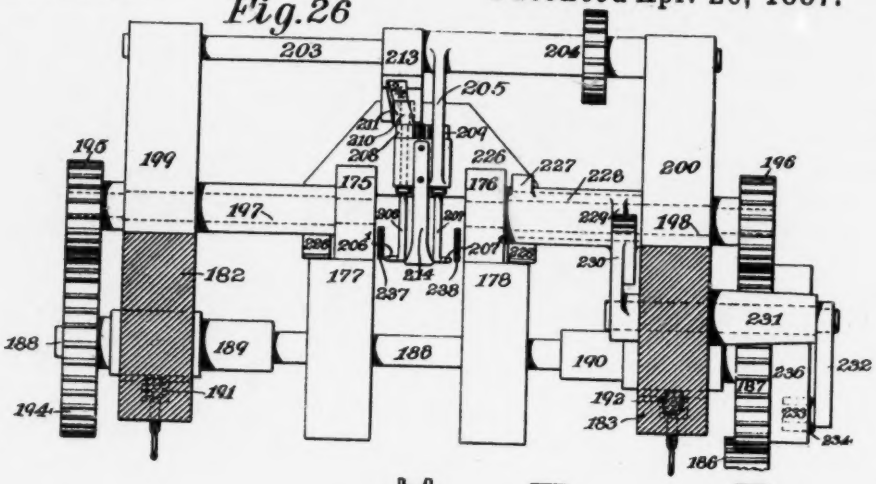

Fig. 27

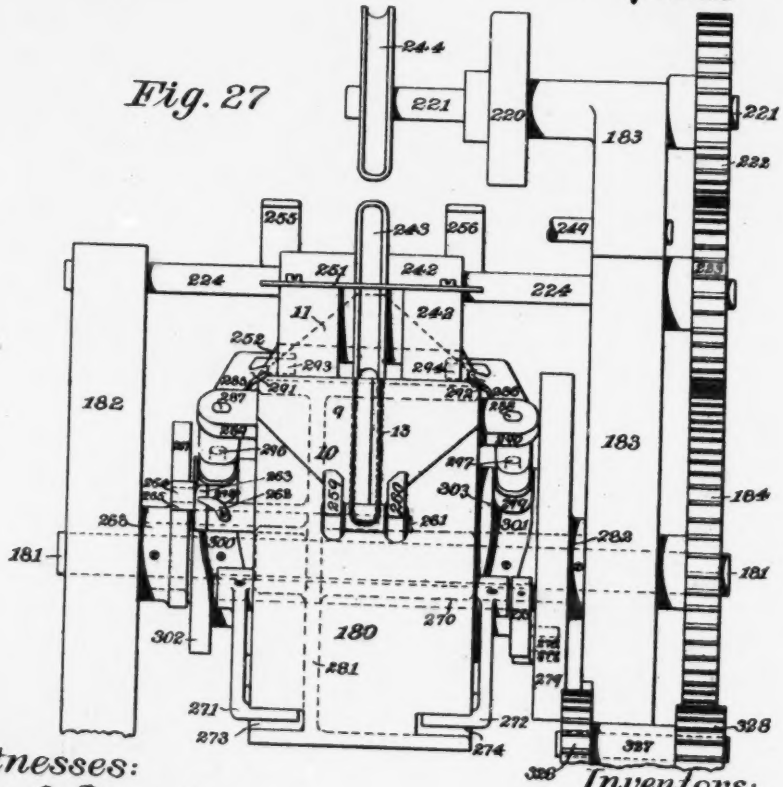

Witnesses:
Henry P. Brück
Edward E. Clausen

Inventors:
William A. Lorenz
William H. Honiss

(No Model.)

14 Sheets—Sheet 10

W. A. LORENZ & W. H. HONISS.

PAPER BAG MACHINE.

No. 361,951. Patented Apr. 26, 1887.

Fig. 28

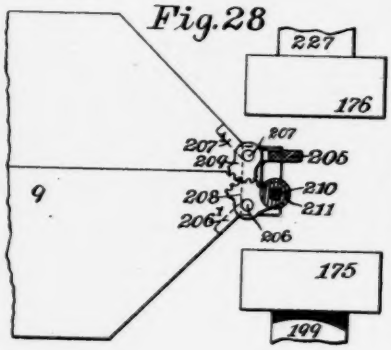

Fig. 29

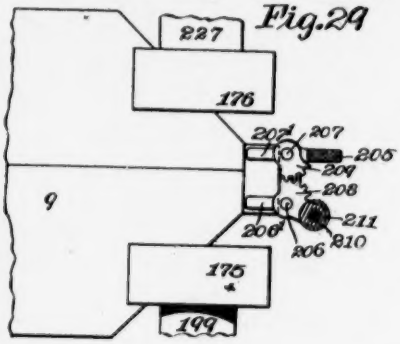

Fig. 30

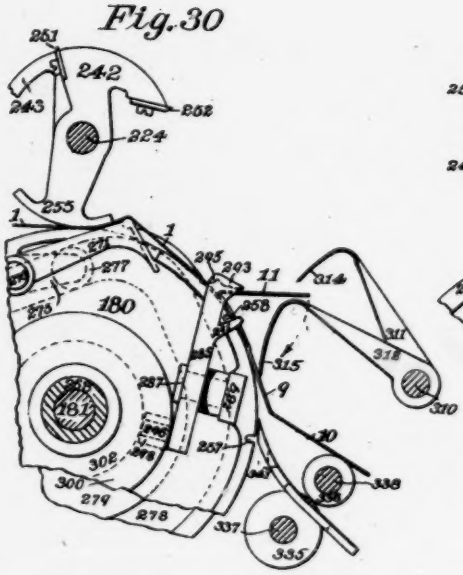

Fig. 31

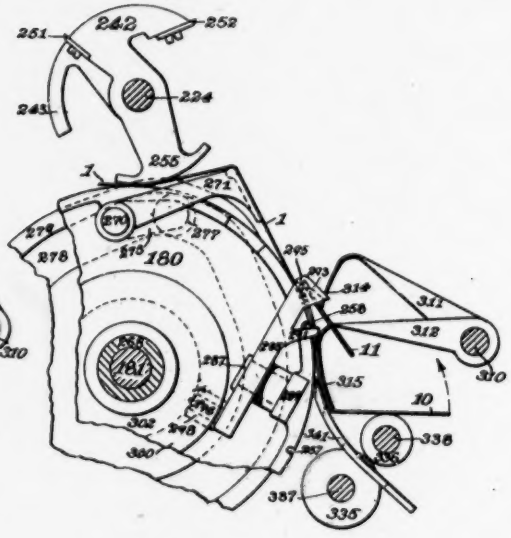

Witnesses:
Henry T. Brück
Edward E. Claussen

Inventors:
William A. Lorenz
William H. Honiss

(No Model.)

14 Sheets—Sheet 11.

W. A. LORENZ & W. H. HONISS.

PAPER BAG MACHINE.

No. 361,951. Patented Apr. 26, 1887.

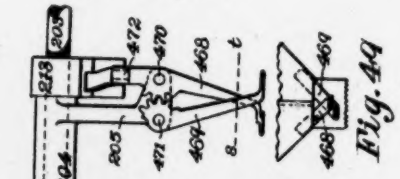

Fig. 44

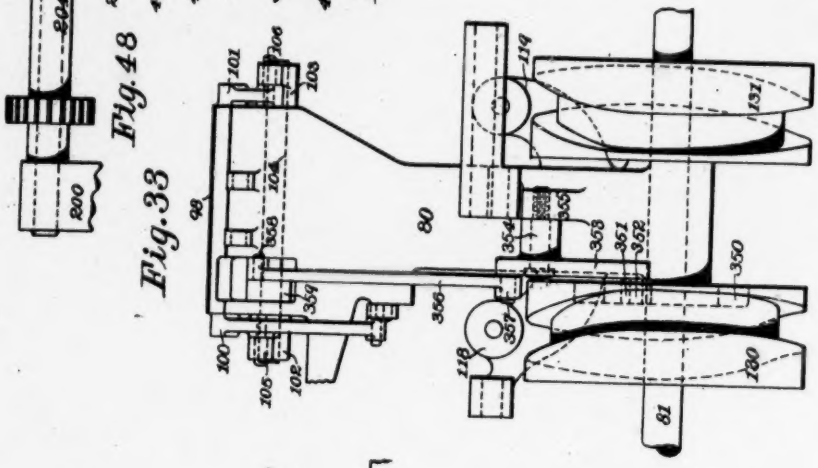

Fig. 48

Fig. 33

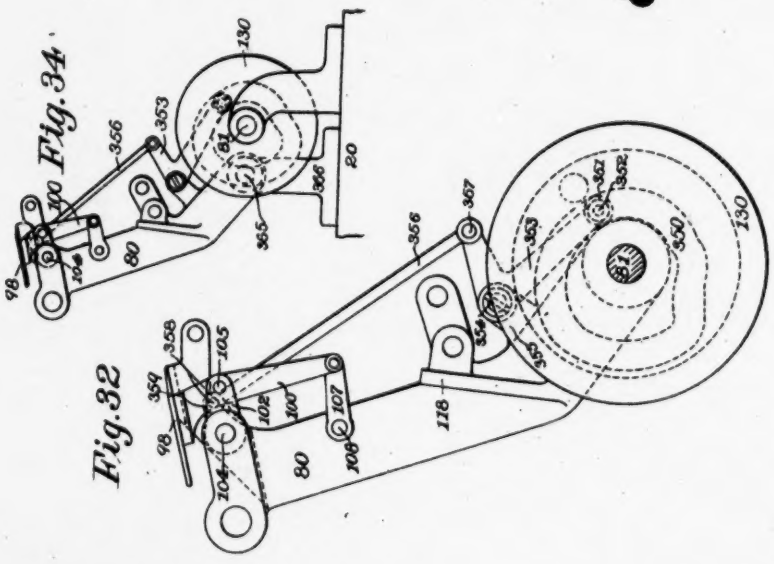

Fig. 34

Fig. 32

Witnesses:
Henry T. Brick
Edward E. Claussen

Inventors:
William A. Lorenz
William H. Honiss

(No Model.)

14 Sheets—Sheet 12.

W. A. LORENZ & W. H. HONISS.

PAPER BAG MACHINE.

No. 361,951. Patented Apr. 26, 1887.

Fig. 35

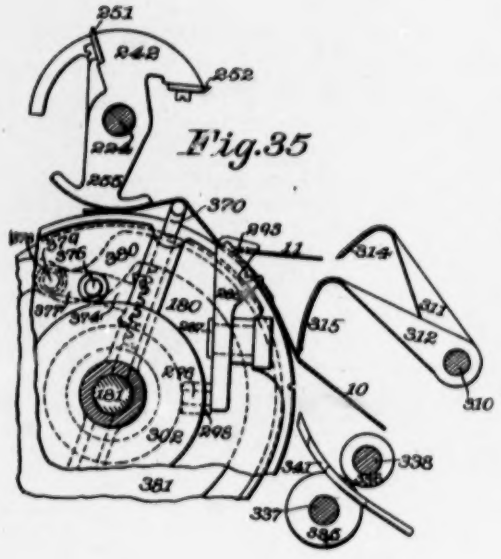

Fig. 36

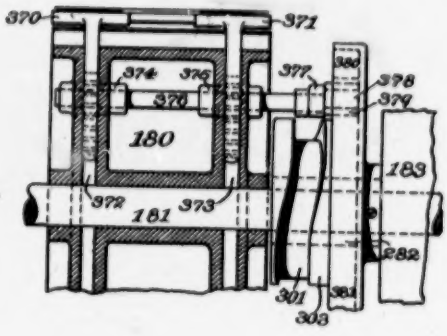

Fig. 37

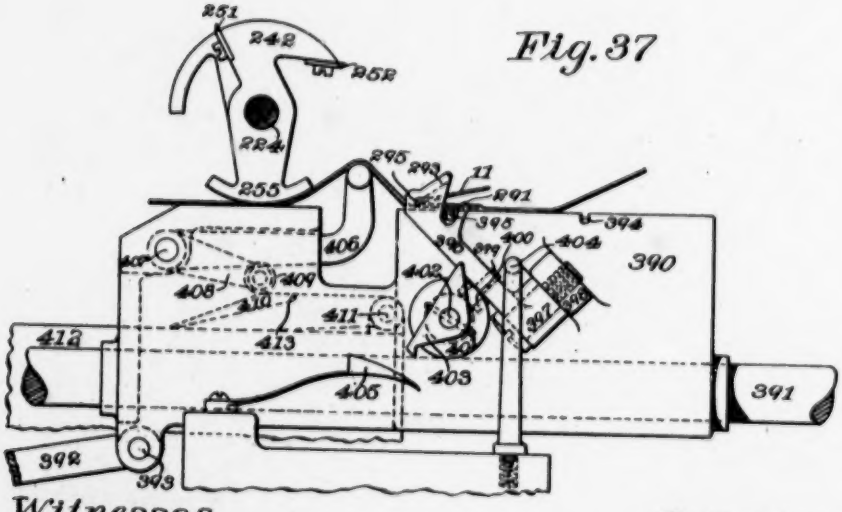

Witnesses

Henry T. Brick

Edward E. Haussey

Inventors:

William A. Lorenz

William H. Honiss

(No Model.)

14 Sheets—Sheet 13.

W. A. LORENZ & W. H. HONISS.

PAPER BAG MACHINE.

No. 361,951. Patented Apr. 26, 1887.

Fig. 38

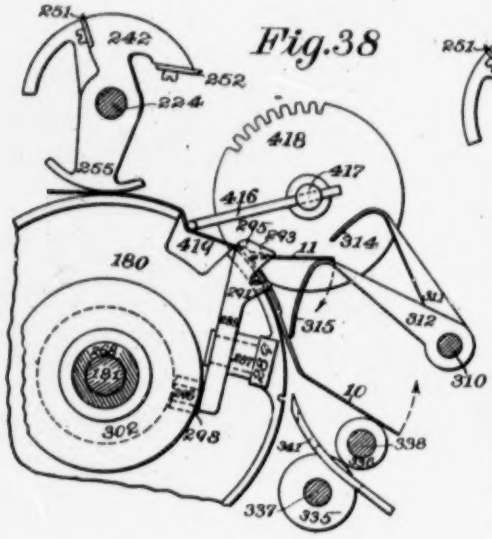

Fig. 39

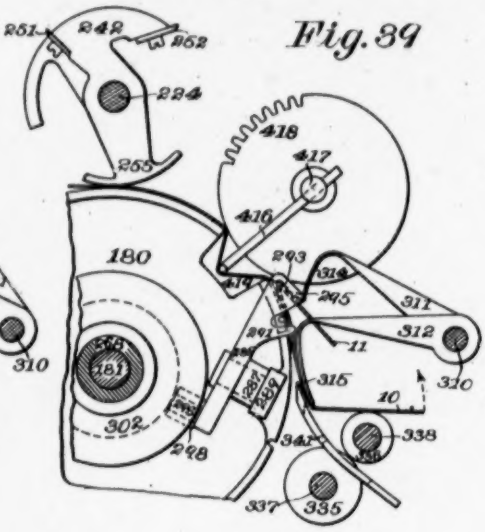

Fig. 41

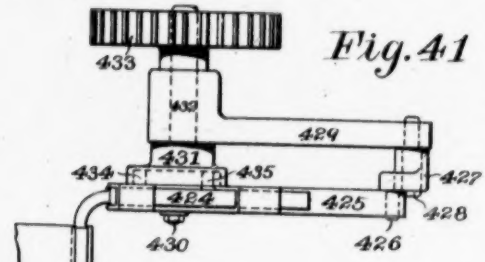

Fig. 40

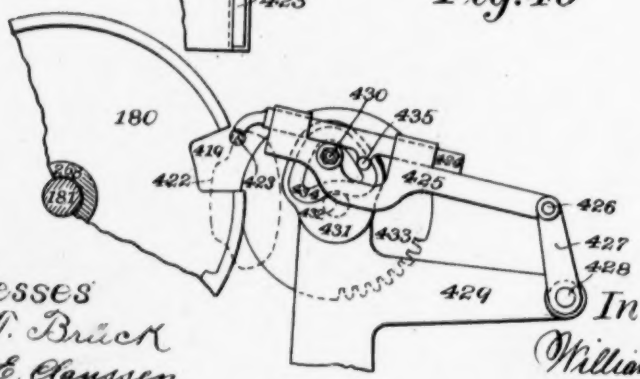

Witnesses
Henry T. Brück
Edward E. Haussen

Inventors:
William A. Lorenz
William H. Honiss

(No Model.)

14 Sheets—Sheet 14.

W. A. LORENZ & W. H. HONISS.

PAPER BAG MACHINE.

No. 361,951. Patented Apr. 26, 1887.

Fig. 43

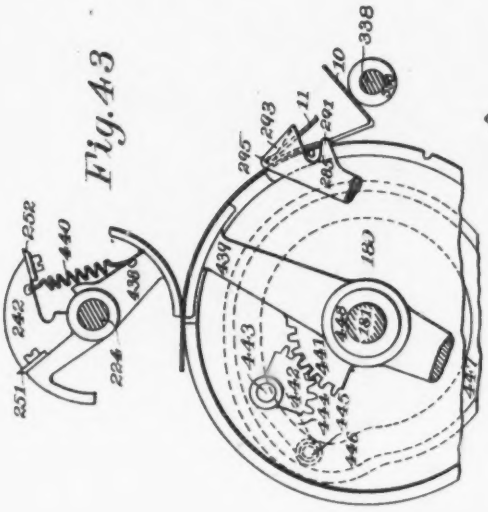

Fig. 45

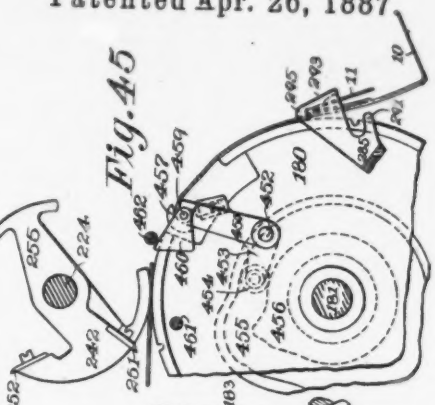

Fig. 46

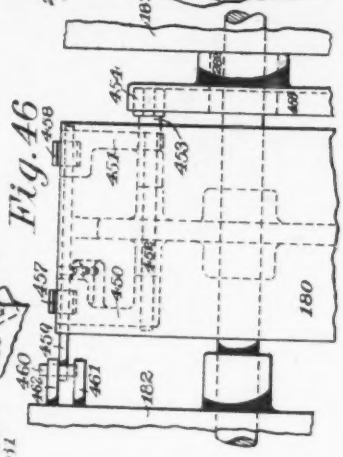

Fig. 47

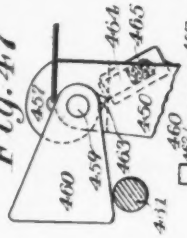

Fig. 42

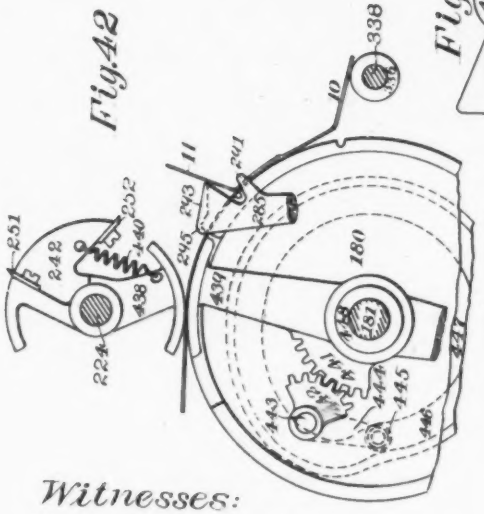

Fig. 44

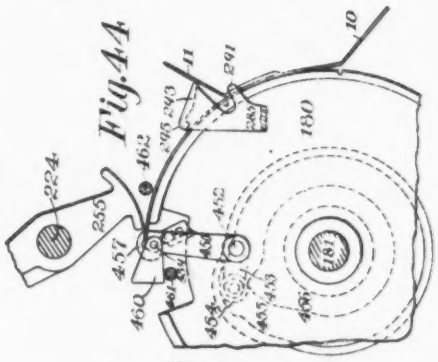

Witnesses:
Henry T. Brück
Edward E. Haussey

Inventors:
William A. Lorenz
William H. Honiss.

UNITED STATES PATENT OFFICE.

WILLIAM A. LORENZ AND WILLIAM H. HONISS, OF HARTFORD, CONNECTICUT, ASSIGNORS TO FELIX W. LEINBACH AND CLARENCE A. WOLLE, BOTH OF BETHLEHEM, PENNSYLVANIA.

PAPER-BAG MACHINE.

SPECIFICATION forming part of Letters Patent No. 361,951, dated April 26, 1887.

Application filed October 18, 1886. Serial No. 216,804. (No model.)

To all whom it may concern:

Be it known that we, WILLIAM A. LORENZ and WILLIAM H. HONISS, of Hartford, Connecticut, have jointly invented a certain new and useful Paper-Bag Machine, of which the following description and claims constitute the specification, and which is illustrated by the accompanying fourteen sheets of drawings.

This machine automatically manufactures square-bottom paper bags from continuous tucked paper tubing.

Figures 1, 2, and 3 of the drawings show plan, side, and end views, respectively, of a portion of a tucked paper tube which is called by us a "blank." Fig. 4 is a side view of this blank pressed together near its center. Figs. 5 and 6 are side and plan views of the blank, showing one end opened up into a box-like form. Figs. 7 and 8 are side and plan views of the blank, showing the box-like form partially folded down into a shape which we term the "diamond." Figs. 9 and 10 show side and plan views of the same fully folded down and lines of paste applied to the diamond. Fig. 11 is a side view of the blank, the diamond being shaped to a curve, and the rear flap being partially folded over. Fig. 12 is a plan of the blank, showing the second flap fully folded over on the diamond. Fig. 13 is a plan view, showing the first flap folded over onto the second flap, thus completing the bag. Fig. 14 is a perspective view of the bag fully opened up. Fig. 15 is a side view of a portion of the machine which draws forward the tucked paper tubing and folds the blanks as far as the shape shown in Fig. 6. Fig. 16 is a plan thereof. Fig. 17 is a section on the line *a b* of Fig. 15, looking to the left. Fig. 18 is a section of a portion of Fig. 16, and is taken on the longitudinal center *c d* of the machine. Fig. 19 is an end view of the right-hand part of Figs. 15 and 16. Fig. 20 shows portions of Fig. 19, but in another position. Figs. 21 and 22 show plan views of the upper parts of Figs. 19 and 20, together with the blank at two different stages in the folding. Fig. 23 is a section of Fig. 15 on the line *e f*. Fig. 24 is a plan view of the remainder of the machine, which folds the bag-blank from Fig. 6 to completion. Fig. 25 is a section on line *m n* of Fig. 24. Fig. 26 is a section of Fig. 25 on the line *g h*. Fig. 27 is an end view of a portion of Fig. 25, looking to the left on the line *i j*. Fig. 28 is an enlarged section of Fig. 25 on the line *k l*, showing a portion of the machine and folded blank. Fig. 29 shows the same parts as in Fig. 28, but in a more advanced position. Figs. 30 and 31 are side views of a portion of Fig. 25, showing the operation of flap-folding. Figs. 32 and 33 represent a modification of the blank-folding portion of Figs. 15 and 19, and are side and end views, respectively. Fig. 34 is another modification of the same. Figs. 35 and 36 represent a modification of the flap-folding devices. Fig. 37 represents a side view of another modification of the same upon a reciprocating carriage. Figs. 38 and 39 represent side views in two positions of another modification of the same. Figs. 40 and 41 represent side and plan views of another modification of the same. Figs. 42 and 43 represent side views in two positions of another modification of the same. Figs. 44, 45, and 46 represent side views in two positions and an end view of another modification of the same. Fig. 47 is an enlarged view of a portion of Fig. 44. Figs. 48 and 49 are front and sectional plan views, respectively, of a modification of the sweeper apparatus, the latter being taken on the line *s t* of Fig. 48.

For greater clearness the following gears are not shown in full in side view, but have parts broken away or teeth omitted, namely: 21, 22, 25, 26, 28, 29, 32, 33, 67, 85, 86, 87, 88, 91, 93, 95, 184, 185, 186, 187, 193, 196, 222, 223, 247, 325, 326, 328, 332, 339, 340, 418, and 433.

The numeral 1 indicates a bag-blank severed from a continuous tucked paper tube, and having two inwardly-projecting tucks, 2 and 3, and two longitudinal slits, 4 and 5, a lip, 6, and a recess portion, 7, the tucks extending the entire length of the blank, and the slits extending only a short distance into one end thereof, as shown in Figs. 1 to 3. The form which we call the "box" is that shown in Figs. 5 and 6, and is marked with the numeral 8. The form which we call the "diamond" is that shown in Figs. 7 to 10, and is marked

with the numeral 9. The ends of the diamond are called "flaps" by us, that marked with the numeral 10 being called the "first flap," and that marked with the numeral 11 the "second flap."

The numeral 12 indicates the place where one side of the diamond laps over the other side, in order to prevent paste from entering the bag and to make the bag smooth on the inside of its bottom. Lines of paste 13 are placed on both sides of the lap 12, as shown in Fig. 10 The second flap, 11, is folded over on the middle rectangular portion of the diamond in Fig. 12, and the first flap, 10, is folded over upon the second flap, as shown in Fig. 13, and the bag is thus completed.

In this machine tucked paper tubing is drawn from a former and is delivered to and gripped upon a traversing folding-bed, and is separated into blanks at each stroke of this bed. This bed, as we construct it, is a rocking one, and is provided with suitable folding apparatus for making the primary bottom folds upon the bag. From this folding-bed the partially-folded bag is delivered by suitable mechanism to gripping-rolls, which pass it to a second traveling folding-bed, upon which the pasting and flap-folding are accomplished. This second bed is an endless one as we prefer to construct it, and is provided with clamping and folding apparatus, as herein set forth. The combinations of mechanism with these folding-beds form the most important parts of our present improvements, and they may be greatly modified in form and arrangement, and very much in their details, without departing from our invention.

In the principal figures the first traveling folding-bed is represented as supported upon a central cam-carrying pivot, as shown in Fig. 15.

The second traveling bed is shown as supported upon a central shaft, with which it revolves, as shown in Fig. 25, and this bed is represented as carrying two pairs of retracting-fingers, being arranged to act in succession from the inside to the outside of the endless folding-bed. Beyond this bed are shown flap-folding blades and rolls for flattening folded bags.

We will first describe that section of this paper-bag machine which draws the tucked paper tubing from the former and delivers it to the traveling folding-bed, together with the mechanism for severing the tubes into bag-blanks.

In Figs. 15, 16, and 17, Sheets 2 to 4, the numeral 15 represents the driving-pulley by which power is communicated to this machine, and 16 is a loose pulley adjacent thereto. The pulley 15 is fastened to a shaft, 17, which has bearings in two uprights, 18 and 19, these latter being fixed to the bed 20 of the machine. A driving-gear, 21, is fixed to the shaft 17 and meshes into a gear, 22, upon the shaft 23, upon which a hand-wheel, 24, is fixed. Upon the shaft 23 is fixed a gear, 25, meshing into an intermediate gear, 26, turning upon a stud, 27. This gear 26 meshes into two gears, 28 and 29, which turn upon shafts 30 and 31, respectively. The gears 28 and 29 mesh into gears 32 and 33, respectively, which turn upon shafts 34 and 35. To the gears 28 and 32 are secured the drawing-rolls 36 and 37, respectively, which also run upon the shafts 30 and 34, respectively. These rolls are narrower than the tucked tube, and are also reduced in diameter in the middle, forming two annular projections, which press upon the tube between its edges and the bottoms of the inwardly-projecting tucks, permitting these to preserve their roundness and elasticity. Pressure is exerted upon the upper drawing-roll, 37, through the cam-handles 42 and 43, by means of springs 44 in the caps 46 and 47, attached to the uprights 18 and 19. The cam-handles 42 and 43 extend into the caps 46 and 47 and into the uprights 18 and 19 and press upon arms 48 and 49, in which is supported the shaft 34, and which arms are pivoted, at 50, to the uprights 18 and 19. The cam-handles 42 and 43 may be swung away from over the arms 48 and 49, permitting the roll 37 to be swung back into the dotted position 52, so that the tube 57 may be "threaded" or drawn over the knife 58 with ease. Pressing-rolls 53 and 54 are attached to the gears 29 and 33 and revolve upon the shafts 31 and 35, respectively. Pressure is exerted upon the upper shaft by means of springs 55 in the caps 46 and 47.

To the left of the drawing-rolls 36 and 37 is shown a portion of the former 56, with the tucked paper tube 57 upon it. The former 56 has projecting from the forward end thereof (within the tucked paper tubing 57) a former-knife, 58, which extends centrally between the rolls 36 and 37 and 53 and 54. This knife is T-shaped, being of the width of the tube between the pressing-rolls, and being narrow where it passes between the rolls 36 and 37. A hole, 59, is made in said knife 58, to allow the rolls 53 and 54 to press the tube. The knife 58 extends beyond the rolls 53 and 54, and its front is suitably serrated, as shown, for instance, in Fig. 17.

Above the former-knife 58 and the tube which envelops the same there is placed a lip-knife, 60, (fastened to the uprights 18 and 19,) whose serrated front edge is preferably curved at the sides, and should be placed a little to the rear of the front of the former-knife 58. In front of the two knives 58 and 60 is shown a striker, 61, which is revolved by means of a shaft, 62, running in a bracket, 63, fixed to the upright 19. The shaft 62 is driven by means of a bevel-gear, 64, fixed thereto, which gear meshes into a bevel-gear, 65, upon the shaft 66. This shaft is driven by a gear, 67, meshing into the driving-gear 21. Upon the shaft 66 is secured an arm, 70, carrying two slitting-knives, 71 and 72. The former 56 is provided with two slots, 73 and 74, to allow the slitting-knives to pass into it.

The mechanism for imparting an oscillating

motion to the traveling folding bed will now be described, together with the preferred form of mechanism for driving the gripping or pressing plate upon this bed.

Upon the shaft 66 is fixed the crank-disk 76, carrying a crank-pin, 77, which holds one end of the connecting-rod 78, the other end of which rod is pivoted upon the stud 79, attached to a rocking or reciprocating carriage, 80. This forwardly and backwardly moving carriage vibrates upon the shaft 81 in brackets 82 and 83. Upon this shaft revolve two gears, 85 and 86, meshing into two gears, 87 and 88, fixed to the shaft 89 in the bracket 90. Meshing into the gear 85 the gear 91 is shown upon the stud 92, the latter gear meshing into the intermediate gear, 93, upon the stud 94, this gear meshing into the gear 95 upon the shaft 23.

Upon the upper part of the carriage 80 there is a bag-blank-clamping apparatus, consisting of a presser-plate, 98, which will be seen by referring to Figs. 15, 16, 19 to 23, Sheets 2 to 6, and which has a vertical motion to the dotted position shown in Fig. 18. This presser-plate is secured to two brackets, 100 and 101, which receive vertical motion by means of two presser-arms, 102 and 103, which are fixed to a rocking shaft, 104, which arms carry pins 105 and 106, which enter the brackets 100 and 101. To the lower end of the bracket 100 a link, 107, is attached, pivoted at 108 to the carriage 80, which gives the presser-plate a parallel motion. To the shaft 104, at the outer end of the carriage 80, there is attached an arm, 109, to which is pivoted a connecting-rod, 110, connected at its other end to a swinging arm, 111, which arm rocks upon a stud, 112, fastened to the connecting-rod 78. On the swinging arm 111 a stud, 113, is fixed, which holds the connecting-rod 110, and upon its inner end holds the roller 114, which runs in a cam-groove, 115, in the crank-disk 76, giving a vibrating motion to the arm 111 as the crank-disk revolves, and, through the arm 111 and intermediate parts, imparts a vertical motion at suitable intervals to the presser-plate 98.

The various mechanisms attached to the traveling folding-bed, as we prefer to construct them, will now be described. They comprise a tuck-entering motion, a blade-folding motion for making the primary folds upon the bottom of the bag, together with a lifting-motion for holding a part of the bag-bottom.

Carriage 80 has two ears, 118 and 119, carrying fixed studs 120 and 121, upon which are placed the two rocking tuck-levers 122 and 123. These levers are provided with studs 124 and 125, carrying cam-rolls 126 and 127, which run in the cam-grooves 128 and 129 of cams 130 and 131, which cams are attached to the gears 85 and 86, running upon the shaft 81 at both sides of the carriage 80. To the upper ends of these tuck-levers 122 and 123 are secured tuck-blades 132 and 133, which have triangular ends projecting inwardly toward the center of the machine, and these blades receive a reciprocating motion in and out from the carriage 80 as the cams 130 and 131 revolve. In the upper ends of the tuck-levers 122 and 123 are placed two shafts, 134 and 135, to which are secured box-blades 136 and 137, which also have triangular-shaped ends. These blades 136 and 137 are operatively connected with a cam on shaft 81, and receive therefrom a rotary reciprocating motion of about one hundred and eighty degrees, as shown in Figs. 16 and 21, respectively. This movement is attained by means of connecting devices, as follows: Pinions 138 and 139, fixed on the box-blade shafts 134 and 135, are driven by means of racks 140 and 141, which slide in casings attached to the upper ends of the tuck-levers. Those racks are operated by means of connecting-rods 142 and 143, which are connected at the pivots 144 and 145 to oscillating levers 146 and 147. These oscillating levers swing upon the hubs of the tuck-levers 122 and 123, which oscillate upon studs 120 and 121. (Seen best in section in Fig. 23, Sheet 6.) The opposite ends of the oscillating levers 146 and 147 are bevel-sectors, which mesh into bevel-sector arms 148 and 149, fastened to the shaft 150, which oscillates in ears in the carriage 80. To the outer end of the shaft 150 is secured the arm 151, carrying a pin, 152, upon which a roller, 153, revolves, engaging in a cam-groove, 154, in the cam 155, which cam is fixed to the other cam, 130, and revolves with it, thus transmitting an oscillating motion simultaneously to the arms 146 and 147 and through them giving the oscillating motion to the box-blades 136 and 137. The tuck-levers 122 and 123 and the levers 146 and 147 are all held upon the studs 120 and 121 by means of collars 156 and 157.

The tuck-levers 122 and 123 receive the proper oscillating motion from the cams 130 and 131 at suitable intervals, thus driving the blades attached to their upper ends to and from the carriage. The levers 146 and 147 also receive a proper oscillating motion from the cam 155 at suitable intervals, transmitting an oscillating motion to the box-blades 136 and 137, all of which motions occur during the rocking motion of the carriage 80.

From the front of carriage 80 two ears, 160 and 161, project, between which a sector, 162, is pivoted upon a stud, 163. To the upper end of the sector 162 there is attached a lifter-plate, 164, which is curved at its forward end and which receives oscillating motion by means of the sector 162, meshing with and driven by the sector 165. This latter sector is fastened to a shaft, 166, swinging in a projecting bracket, 167, on the carriage 80. To the other end of the shaft 166 is attached an arm, 168, which carries a pin, 169, and a roller, 170, which roller engages in a cam-groove, 171, in the cam 172, which cam is attached to the cam 131, and revolves with it and transmits an oscillating motion to said lifter-plate 164,

proper to hold up and guide the bag blank into the gripper-rolls described below.

The mechanism for drawing down the partially-folded bag into the diamond shape and delivering it from the first traveling bed to the second traveling bed will now be taken up. This apparatus includes besides a roll or rolls for pressing along the partially-folded blank a sweeper having reciprocating (by which term we include "rotary reciprocating") fingers operated simultaneously in opposite directions during the stroke of the sweeper. Said sweeper may be greatly modified as to its structure within the scope of our invention, and it is shown in two forms, of which the preferred form is incorporated in the principal views of the machine. Instead of the two gripper-rolls one roll having thereon gripper-fingers may be employed to pass along the bag-blank to the second folding-bed, or the said blank may be delivered directly to this latter bed, as shown in our United States Patent No. 331,722, dated December 1, 1885.

Arranged in front of the rocking carriage 80 are shown two upper gripping-rolls, 175 and 176, (see Figs. 24 to 26,) placed above two lower gripping-rolls, 177 and 178, and in front of these gripping-rolls is shown the cylinder 180, above which are represented pasting devices, and in front of which are shown flap-folding devices, all to be hereinafter explained.

The cylinder 180 is fixed to a shaft, 181, which revolves in uprights 182 and 183, attached to the bed 20 of the machine. To this shaft 181 a gear, 184, is attached, which is driven from the intermediate gear, 185, which meshes into the gear 193, fastened to the shaft 89 in the bracket 90. The gear 184 also meshes into an intermediate gear, 186, which drives a gear, 187, upon the shaft 188, upon which the lower gripper-rolls, 177 and 178, are attached. The shaft 188 runs in adjustable boxes 189 and 190, placed in grooves in the uprights 182 and 183. These boxes are supported by spiral springs 191 and 192 in the uprights 182 and 183. To the other end of the shaft 188 is attached another gear, 194, and meshing into the two gears 194 and 187 are shown two small gears, 195 and 196, fastened to shafts 197 and 198, which run in brackets 199 and 200, and carry the two upper gripper-rolls, 175 and 176, the brackets 199 and 200 being fastened to the uprights 182 and 183. By this arrangement of the shaft 188 in boxes 189 and 190, together with the spiral springs 191 and 192, the lower gripper-rolls, 177 and 178, are pressed upward against the upper gripper-rolls, 175 and 176. Attached to the upper ends of the brackets 199 and 200 is shown a rod, 203, upon which a sector-lever, 204, oscillates, one of whose ends terminates in an arm, 205, carrying two sweeper-shafts, 206 and 207, whose lower ends are bent at about right angles to form the sweeper-fingers 206′ and 207′, and to whose upper ends are fastened sector-pinions 208 and 209, respectively. The sector-pinion 208 has an arm upon which a stud, 210, is fixed, upon which a roll, 211, is shown, engaging in a cam-groove, 212, of the cam 213, fixed on rod 203. As the arm 205 is oscillated the sweeper-shafts 206 and 207 receive a rotary reciprocating motion, being vibrated by means of the roller 211, working in the cam 213. The arm 205 also carries a plate, 214, (see Fig. 26,) whose functions will be hereinafter described. The arm 205 derives its oscillating motion from the sector 204, meshing into a sector-lever, 215, carried on the stud 216, fastened to the upright 183. The other end of the lever 215 carries a stud, 217, and a roll, 218, engaging in the cam-groove 219 of a cam, 220, on shaft 221, which shaft runs in the upright 183, and is driven by a gear, 222, meshing into the gear 223 on shaft 224, the latter gear meshing into the gear 184, as before described.

A plate, 226, is shown in Figs. 24 to 26, fastened to an arm, 227, and having a vibratory motion with it upon a hub, 228, of the bracket 200. At the other end of the arm 227 is shown a sector-gear, 229, meshing into a sector-arm, 230, fastened to a shaft, 231, in the upright 183. To the other end of the shaft 231 is fastened the arm 232, carrying the stud 233, and the roller 234, engaging in the cam-groove 235 of a cam, 236, and fastened to the shaft 188. This cam 236 communicates the proper vibrating motion to the plate 226. The plate 226 has two extensions reaching to both sides of the upper gripper-rolls, 175 and 176, and over the lower gripper-rolls, 177 and 178. Between these upper two rolls, and extending beyond them, are shown two guides or fingers, 237 and 238, which are secured to a rod, 239, fixed in the uprights 182 and 183.

We will now describe the operation of the various mechanisms connected with the second traveling folding-bed as we prefer to construct them. They comprise paste-applying devices, creasing and gripping apparatus, and flap-folding devices operating to retract the bag upon the traveling folding-bed, which devices form an important feature in our invention.

Above the cylinder 180, and upon the shaft 224, the paster-roll 242 is so placed as just to clear the cylinder 180. The roll 242 has an extension, 243, forming two paste-applying surfaces, which lengthen the central paste applying surfaces of the roll 242. Paste is applied to these surfaces by a paste-sector, 244, fastened to the shaft 221, which receives paste from a distributing-roll, 245, upon the shaft 246, which runs in the upright 183, and is driven by a gear, 247, meshing into the gear 222. Paste is taken from a paste dish, 248, supported by a rod, 249, fastened to the upright 183. The paster-roll 242 carries two creasing-blades, 251 and 252, which are as wide as the cylinder 180. The paster-roll 242 also carries two pressers or sector-rolls, 255 and 256, the diameter of which is a little larger than that of the roll 242, being just half the diameter (or other aliquot part) of the cyl-

inder 180, and when over this cylinder just touching it.

The cylinder 180, owing to its double size, as stated, is provided with duplicate sets of gripping, creasing, and folding devices, which devices are arranged diametrically opposite one another. For simplicity and greater clearness, we will describe one set of each device, it being understood that the description of the parts and operation of one set will apply equally to those of the other.

The grooves 257 and 258 match the creasing-blades 251 and 252 upon the roll 242, which blades enter the grooves a short distance as the cylinder revolves. A little beyond the first creaser-groove in the cylinder 180 is arranged a pair of yieldingly-held grippers, 259 and 260, which are secured to a shaft, 261, that oscillates in bearings in the cylinder 180. Said grippers 259 and 260 project through holes in the rim of the cylinder 180, and are bent so as to reach over and press upon the outer circumference of this cylinder. This pressing is effected by a small spring, 262, which rests upon the arm 263, attached to the shaft 261 at its outer end. The grippers 259 and 260 are raised and lowered at suitable intervals by means of the roller 265 upon the arm 263 coming in contact with the cams 266 and 267. These cams are secured to a hub, 268, which is an extension of the upright 182, and through whose center the shaft 181 revolves.

In the cylinder 180, and to the rear of the second creaser-groove, 258, there is placed in the cylinder a shaft, 270, extending through the cylinder and carrying on both sides thereof a pair of take-up arms or retracting-fingers, 271 and 272, whose outer ends are bent at right angles and extend into recesses 273 and 274 in the cylinder 180. In Fig. 24 one of these arms, 272, is omitted for greater clearness, the shaft 270 being broken off a little beyond the edge of the cylinder. These ends of the arms 271 and 272 are represented inside the circumference of the cylinder 180, and are moved outward beyond its circumference at proper intervals by means of an arm, 275, fastened to the shaft 270. This arm carries a stud, 276, and a roll, 277, running in a cam-groove, 278, of a cam, 279, shown clearly in Fig. 25, where the web 281 of the cylinder 180 is shown broken away. The cam 279 is omitted in Fig. 24 for greater clearness, but is shown in Figs. 25, 27, 30, and 31, being secured to a hub, 282, which forms an extension of the upright 183. As the cylinder 180 revolves the cam 279 transmits motion to the take-up arms 271 and 272, giving them a vibratory motion at proper intervals.

The cylinder 180 also carries at its sides a pair of side clips, 285 and 286, which are shown in Figs. 25, 27, 30, and 31, and only on one side of the cylinder in Fig. 24, being omitted on the other side for greater clearness. These side clips, 285 and 286, are placed at an angle on the sides of the cylinder and oscillate upon studs 287 and 288, which are secured to ears 289 and 290, attached to the cylinder 180. The outer ends of the side clips, 285 and 286, are bent inward toward the cylinder, and each of the clips has two projections, the shorter ones being represented by the numbers 291 and 292, which projections extend a little in advance of the second creaser-groove, 258, and when closed over the cylinder 180 reach over its edge a short distance. The longer projections, 293 and 294, extend farther inward and form guiding-fingers, which, when swung over upon the cylinder 180, reach a little to the rear of the second creaser-groove, 258, and considerably inward from the edge of the cylinder. These projections 293 and 294 are beveled backward, being open at the front, and being closed at the back by corner-pieces 295, reaching to within a short distance of the surface of the cylinder, as shown clearly in Figs. 30 and 31. These clips 285 and 286 receive an oscillating motion at their inner end by means of studs 296 and 297 and rollers 298 and 299, which engage in cam-grooves 300 and 301 in cams 302 and 303, which cams are fixed to the hubs 268 and 282 of the uprights 182 and 183. Cam 303 is omitted in Fig. 24 for greater clearness of illustration. These cams 302 and 303 are constructed to communicate the required oscillating motion to the side clips, 285 and 286, at proper intervals during the revolution of the cylinder 180.

Operating in connection with the second traveling folding-bed are shown flap folding and delivering apparatus, which operate to do the final flap-folding and to deliver the bags from the machine.

Arranged in front of the cylinder 180 upon the shaft 310, which shaft rests in bearings in the two uprights 308 and 309 on the bed 20 of the machine, are shown three folder-arms, an inner one, 311, and two outer ones, 312 and 313, all of whose ends are bent and terminate in blades 314, 315, and 316, respectively. These blades receive an oscillating motion by means of a sector, 317, fastened to the shaft 310, which meshes into a sector-ended lever, 318, which oscillates upon a stud, 319, fixed to the upright 309. At the other end of the lever 318 is shown a stud, 320, and a roller, 321, which engages in the cam-groove 322 of a cam, 323. This cam 323 is fixed to a shaft, 324, which turns in the uprights 308 and 309, and is driven by a gear, 325, meshing into a pinion, 326, which is driven by a shaft, 327, running in the upright 183, by means of a gear, 328, meshing in the gear 184, before described. The shaft 324 carries a roll, 329, above which is shown another roll, 330, upon a shaft, 331, running in the uprights 308 and 309. The shaft 331 is driven by a gear, 332, meshing into the gear 325, before described. The rolls 329 and 330 are arranged so as just to clear one another. Between the cylinder 180 and the rolls 329 and 330 are shown two other rolls, 335 and 336, which are narrow, and which are secured to shafts 337 and 338, which run in the uprights 308 and 309. These shafts are driven by gears 339 and 340, respect-

ively, the former meshing into the gear 326 and driven by it.

In front of the cylinder 180 is shown a curved plate, 341, which extends at both sides of the rolls 335. This plate 341 extends a little beyond the sweep of the blades 315 and 316, which blades in their motion downward pass at both sides of the roller 336 and a little beyond it. The roller 336 is placed just to clear the roller 335.

The operation of the machine is as follows: Continuous tucked paper tubing 57, while being manufactured upon a former, 56, by apparatus substantially as shown in our Patent No. 331,722, dated December 1, 1885, is drawn forward into the machine by the drawing-rolls 36 and 37, and passes between the pressing-rolls 53 and 54 and under the lip-knife 60. In its progress forward from the former through these rolls, the tube 57 envelops the former-knife 58, the upper ply, 14, Fig. 3, of the tube passing over the knife 58, while the lower ply of the bag and the two plies of the tucks pass below it. At the same time the slitter-knives rotate and cut slits 4 and 5 into the tube, doing this once for each bag-length required. The tube is fed forward from the knife 58 onto the upper portion of the first traveling folding bed or carriage, 80, during its backward stroke, while the presser-plate 98 is elevated to its upper position, as shown in Fig. 18. The presser-plate 98 descends upon the tube and clamps it to the carriage 80 at approximately the time when the latter commences its forward stroke, a sufficient amount of this tube being fed beyond the forward end of this presser-plate to form a bag-bottom. The forward motion of the carriage being at this point slower than that of the tube 57, the tube is bent downward, as shown in Fig. 15, forming a slackness therein, until the striker 61 passes in front of the knives 58 and 60 and takes up this slack and breaks or tears off a bag-length, all of which is done once for every revolution of the crank and every stroke of the carriage. The taking up of the slack by the striker 61 in this manner causes the paper to stand at an angle approaching ninety degrees to the cutting-edges of the two knives, so that as the striker passes them it tears off the tube with great ease and produces a clean break. The position of the parts at the beginning of the breaking is shown in Fig. 18. The shape of the cut produced is shown in Figs. 1 and 2 by the lip 6 in the end of the bag and the recess 7 in the oncoming tube. The breaking off is so timed as to bring the slits 4 and 5 at the forward end of the broken-off tube 57.

During the backward stroke of the carriage 80, and while the tube passes under the presser-plate 98, the tuck-blades 132 and 133 and the box-blades 136 and 137 are rocked forward into the tucks 2 and 3 of the paper tube, as shown in Figs. 15, 16, and 19. These blades are enabled to enter the tucks of the tube on the backward stroke of the carriage 80, because the upper and lower plies of the tucks of the blank spring apart. This springing apart occurs because the drawing rolls 36 and 37, before described, have not flattened the bottoms of the inwardly-projecting tucks 2 and 3, nor the edges of the blank, thus leaving the tucks elastic and self-opening. The entering of the blades on the backward stroke of the carriage has the important advantage of gaining time for making the primary fold, which is thereby readily completed before the carriage finishes its forward stroke. By this means the machine has a much greater capacity with less velocity of movement in many of its parts. After these blades have entered, and after the presser-plate 98 has gripped the tube, and during the forward motion of the carriage, the box-blades 136 and 137 are turned over backward, thus folding the forward part of the bag, as shown in Fig. 21. During the forward motion of the carriage the sweeper-shafts 206 and 207 and the plate 214 enter the forward end of the box 8, and after the box has been folded, as shown in Fig. 21, they swing forward and draw the box 8 down into the diamond shape 9, as shown in Figs. 22, 24, and 25, the bent feet of the sweeper-shafts being turned outward, as shown in Figs. 24 and 28. During this operation of forming the diamond the lifter-plate 164 is brought upward, pressing the forward end of the diamond 9 against the plate 214, thus holding it securely. At the same time the plate 226 descends upon the flattened diamond and prevents it from springing upward as the bag passes forward. The sweeper-shafts 206 and 207 then draw the diamond forward into the bite of the gripping-rolls 175 and 177 and 176 and 178. The presser-plate 98 is then elevated a little, the lifter-plate is dropped a little, and the tuck-levers 122 and 123, carrying the four blades withdraw from the bag, taking the position shown in Fig. 20, after which the box-blades revolve back to the position shown in Figs. 15 and 19. The sweeper-shafts 206 and 207 are then driven forward with greater speed than that of the bag, and the bent ends 206′ and 207′ thereof are turned inward and withdrawn from the bag, as shown in Fig. 29. As the bag passes forward it is flattened by passing under the rolls 175 and 176 and plate 226 and over the rolls 177 and 178, the rearward half of the diamond being fully flattened between the plate 226 and the plate 98. It then passes forward under the fingers 237 and 238 and upon the cylinder 180, the forward end of the diamond being gripped by one of the pairs of grippers 259 and 260, which draws the bag forward under the paster-roll 242, which applies the paste to the diamond. The creaser-blade 251 enters the recess 257 in the cylinder 180 and creases the bag across the line *o p*, Figs. 10 and 12, to facilitate subsequent folding operations. The creaser-blade 252 then enters the groove 258 in the cylinder 180 and creases the bag across the line *q r*, Fig. 10. This causes the second flap, 11, to rise into the position shown in Figs. 11, 25, and 27. While

in this position, one of the two pairs of side clips, 285 and 286, is rocked upon the cylinder and over the edge of the bag, the projections 291 and 292 taking a position over the edges of the bag and preventing the bag from rising from the cylinder. This motion of the side clips also projects the ends 293 and 294 over the bag and behind the flap 11, which has been raised, as before described. As the cylinder revolves forward the flap 11 is supported by the projections 293 and 294, which prevent it from dropping down to its former position. After the flap 11 has passed beyond the roll 242 the presser-sectors 255 and 256 arrive upon the rear end, 1, of the bag and firmly press it to the cylinder 180 as this revolves, as shown in Figs. 30 and 31. By this time the grippers 259 and 260 will have released the forward end of the diamond, which will spring outward under the folding-blades 315 and 316 and over the plate 341 and over the roll 336, as shown in Fig. 30. While the presser-sectors 255 and 256 pinch the rear end of the bag the forward ends or fingers of the take-up arms 271 and 272 move outward beyond the circumference of the cylinder to the position shown in Fig. 30, and from that to that shown in Fig. 31. This draws the forward end of the bag backward upon the cylinder, the projections on the side clips, 285 and 286, allowing the bag to do so. The object of pulling the bag backward is to fold forward the second flap, 11, as shown in Figs. 30 and 31. This is accomplished by the upper ends of the projections 293 and 294 of the side clips coming in contact with the flap 11 above *q r*. The bag is drawn backward until it comes in contact with the corner-pieces 295, after which the take-up arms 271 and 272 are gradually returned. The flap 11, having been folded forward, is now assisted by the folding-blade 314, as shown in Fig. 31, which moves downward with the folder-blades 315 and 316, the first one serving to keep the flap 11 close to the bag-bottom, while the last two double over the first flap, 10, at the folding-line *o p*, folding it upon the flap 11 and delivering the bag between the rolls 335 and 336. The side clips, 285 and 286, are meanwhile rocked outward from the cylinder, thus freeing the folded bag, which then passes between the rolls 329 and 330, which flatten and deliver it completed. The bag then passes to suitable drying apparatus. (Not shown.)

In order to pass the bag between the gripping-rolls 175 and 176 and 177 and 178, the bearings supporting the latter rolls are made elastic, as represented. This same arrangement of elastic bearings may be applied to the rolls 242, 336, and 330, in order to avoid crushing the bag to too great an extent; but such bearings are not shown in the drawings.

The drawings represent double sets of grippers, 259 and 260, and of side clips, 285 and 286, and of take-up arms 271 and 272, each of which sets acts in succession upon the partially-folded bags as they are delivered to the cylinder. This duplication of parts, though not essential, is believed to be preferable on account of the enlargement of the cylinder thereby obtained, which allows the use of larger cams at the side of the cylinder, and also does not require the bag to be bent around too small a circumference.

We will now describe some modifications of mechanisms that may be applied to the first traveling folding-bed without departing from the spirit and scope of our invention. The first of these is shown in Figs. 32 and 33, and represents a modified form of mechanism for imparting motion to the presser-plate 98. The traveling folding-bed is shown, as before, at 80, pivoted on the shaft 81, between the two cams 130 and 131, in which the presser-plate shaft 104 is also shown, and upon which shaft the presser-arms 102 and 103 are fixed, at whose extremities are swung brackets 100 and 101 on the pivots 105 and 106, the lower end of the bracket 100 being steadied by the link 107, swinging upon the pivot 108, projecting from the carriage 80, and to which brackets the presser-plate 98 is fastened, all in the same manner as before described. The proper motion is imparted to this presser-plate 98 by mechanism driven from a cam upon the shaft 81. The cam-groove is shown at 350, cut in the side of the cam 130. A roller, 351, upon the stud 352 engages in the groove, the stud being secured to the lower end of a lever, 353, which swings upon a stud, 354, fastened to an ear, 355, upon the carriage 80. To the other end of the lever 353 a connecting-rod, 356, is jointed upon a stud, 357. This connecting-rod at its other end is jointed upon a stud, 358, to the arm 359, which arm is fastened to the shaft 104, before described. Motion is imparted to the presser-plate 98 by means of the shaft 104, being driven by the arm 359, the connecting-rod 356, the lever 353, and the cam-groove 350, which groove is cut to impart this motion at proper intervals.

A second modification is applied to the first traveling folding-bed, and is shown in side view in Fig. 34 upon a reduced scale. Here the carriage 80 is not swung upon the central shaft, 81, but is swung upon a pivot, 365, adjacent thereto, which pivot is fastened to a bracket, 366, upon the bed 20 of the machine. The shaft 81 carries the cam 130. The carriage 80 carries mechanisms similar to that described in Fig. 32.

It is obvious that all motions communicated by cams upon the shaft 81 to mechanisms upon the carriage 80 will have to be so far modified as to allow for the different position of the pivot 365; but these differences of motion do not effect the results obtained in the folding operations performed upon the bag-blank.

We will next proceed to describe various modifications that may be applied to the second traveling folding bed and refer to the mechanism for retracting the bag upon the bed, as well as to the bed itself. In the principal fig-

ures this bag-retracting apparatus is shown as constructed in Figs. 24, 25, 26, 27, 30, and 31, and here the retracting-fingers are arranged to act from the inside toward the outside of the endless folding-bed 180.

A modified form of retracting-fingers, operating from the inside to the outside of the folding-bed, is shown in Figs. 35 and 36. Here in place of the swinging take-up arms there are shown two radially-sliding retracting-fingers, 370 and 371. These fingers slide in grooves 372 and 373 in the cylinder 180, and receive a reciprocating motion by means of sectors 374 and 375, meshing into racks cut upon the fingers 370 and 371. The sectors 374 and 375 are pivoted upon the shaft 376, to whose outer end an arm, 377, is fastened, which carries upon its extremity a stud, 378, and roller 379. This roller engages in a cam-groove, 380, in a cam, 381, which is fixed to the hub 282 of the bracket 183. The remaining parts shown in Fig. 35—that is, the paster-roll 242, the creasing-blades 251 and 252, and the presser sector-roll 255 on the shaft 224—are similar to the parts before described, as are also the side clip, 285, the stud 287, roller 298, and the cam 302.

The operation of the retracting-fingers 370 and 371 is similar in all respects as to time of movements to the retracting-fingers 271 and 272, and they perform the same functions.

We will now describe a modified form of a traveling folding-bed, which carries a bag-retracting mechanism operating outwardly to retract the bag. This is shown in side view in Fig. 37, wherein the traveling folding-bed is represented as a carriage, 390, upon a slide-way, 391, upon which it may receive a reciprocating motion from a connecting-rod, 392, connected to a pin, 393. This carriage 390 moves backward and forward once to each revolution of the paster-roll 242 and presser sector-roll 255 upon the shaft 224. The roll 242 carries the creasing-blades 251 and 252, which enter the creasing-grooves 394 and 395 in the carriage 390 in succession as the carriage passes beneath the roll 242, and so creases the bag-blank at the folding-lines *o p* and *q r*, Fig. 10. The carriage 390 carries at its sides a pair of side clips, 396, one of which only is shown in the drawings. This clip 396 is pivoted to the stud 397, fastened to an ear, 398, of the carriage 390. The pair of clips 396 are provided with a pair of studs, 399, upon which rollers 400 revolve, which engage in right and left hand spiral cam-grooves in a pair of cams, 401, fastened to a shaft, 402. As the shaft is oscillated the pair of cams 401, by means of their spiral grooves, impart a swinging motion to the pair of side clips, 396, precisely in the same manner as described in our United States Patent No. 331,722, dated December 1, 1885, and clearly shown in Figs. 28 and 29. The pair of clips 396 have projections 291 and 293 and corner-pieces 295, similar to those before described. The oscillating motion is imparted to the shaft 402 by means of a lever, 403, whose upper end comes in contact with a rod, 404, and whose lower end comes in contact with a spring-pawl, 405, as it reciprocates. The carriage 390 also carries a pair of retracting-fingers, 406, fastened to a shaft, 407, to which shaft an arm, 408, is secured, carrying a roller, 409, which is vibrated as the carriage reciprocates by means of a switch-cam, 410, which is hinged to a stud, 411, upon a track, 412. The roller 409, coming in contact with the switch-cam 410 in the forward motion of the carriage 390, moves the retracting-fingers 406 outwardly, as shown in the drawings, and after the roller 409 has passed the end 413 of the switch-cam 410 it drops down upon the track 412, and passes, on the backward stroke of the carriage, beneath the switch-cam 410, elevating it until it has passed beyond its length. The successive operations of bag-retracting and flap-folding are similar in this traveling folding-bed to the endless one described—that is, after the bag has been creased and the pair of side clips, 396, have been swung over the bag and the presser sector-roll 255 has gripped the tail of the bag upon the carriage 390 the retracting-fingers 406 are operated outwardly as the carriage 390 advances, thus drawing the forward part of the bag back, drawing the flap 11 underneath the projections 293 of the clips 396, after which the retracting-fingers drop, and the next folding operations may be performed.

The next two modifications of retracting-fingers operating in connection with an endless traveling folding-bed are shown in Figs. 38 to 41. In these modifications the retracting-finger operates from the outside of the bed, pressing the bag inwardly into it. The first of these modifications is shown in two positions in Figs. 38 and 39 in side view, and resembles in all parts Figs. 30 and 31, except that the retracting-fingers and their connecting mechanism are entirely omitted from the cylinder 180. In the place thereof a revolving retracting-finger, 416, is introduced into the combination. This finger 416 is attached to a shaft, 417, which shaft revolves in bearings in the uprights of the machine, and which is driven by a gear, 418, meshing into a gear (not shown) which drives the cylinder 180 and the shaft 181. The outer end of the finger 416 projects in its revolution into a recess, 419, of the cylinder 180, and operates to draw the bag back in the following manner: The partially-folded bag having been gripped upon the cylinder 180, properly creased, as before described, and moved along sufficiently far to enable the presser sector-rolls 255 to grip the bag upon the cylinder, the outer end of the revolving retracting-finger 416 presses upon the bag-blank, forcing it into the recess 419 of the cylinder 180, as shown first in Fig. 38 and then in Fig. 39, drawing the forward end of the bag backward and folding the flap 11 over in a manner similar to that described in the principal figures. During the further revolution of the finger 416 it moves out and away from

the cylinder, operating at its next revolution upon the next bag-blank.

The second modification of the retracting-finger, operating inwardly toward the traveling bed, is shown in Figs. 40 and 41, where, in the place of a revolving retracting-finger, 416, a retracting-finger having a variable motion is shown, traveling in the path shown by the dotted line 422. This finger 423 extends across the cylinder 180 and is attached to a slide, 424, which moves in grooves in a yoke, 425, which is pivoted at 426 to a rocking arm, 427, rocking upon a pivot, 428, attached to the upright 429. At the other extremity of the yoke 425 is shown a crank-pin, 430, fastened to the cam-disk 431, which communicates a rocking motion to the yoke 425. The cam-disk 431 is attached to a shaft, 432, and receives motion through a gear, 433, which meshes into a driving-gear (not shown) upon the shaft 181. Around the crank-pin 430 a cam-groove, 434, is cut, in which a pin, 435, attached to the slide 424, engages. As the cam-disk 431 revolves, imparting a rocking motion to the yoke 425, the slide 424 also receives a reciprocating motion at proper intervals, giving to the finger 423 a motion substantially as that shown by the dotted line 422. The cylinder 180 is provided with the recess 419, to allow of the passage of the finger, enabling this finger to retract bag-blanks substantially in the same manner as shown in Figs. 38 and 39.

The next two methods for retracting a bag-blank upon an endless traveling bed are shown in Figs. 42 to 46. The first of these is shown in two positions in Figs. 42 and 43. In these views the points of similarity to the methods described in the principal figures consist of the cylinder 180, the side clips, 285, (which are here only partially shown,) the paster-roll 242, and the creasing-blades 251 and 252. Instead of retracting the bag by means of fingers, previously described, it is pulled back bodily sufficiently to fold forward the flap 11 by means of gripping-fingers 438 and 439, which grip the bag and hold it long enough to effect the desired retraction. The fingers 439 are pivoted on the hub 448 of the cylinder, and the fingers 438 are pivoted on the shaft 224. During the forward motion of the cylinder 180 a retarded motion is communicated to the fingers 439, which communicate a retarded motion to the fingers 438, opening the spring 440, as shown in Fig. 43. The retarding motion communicated to the fingers 439 is effected in the following manner: To the fingers 439 are attached sectors 441, meshing into sectors 442 upon a shaft, 443, in the cylinder 180. To this shaft is fixed an arm, 444, carrying a roller, 445, engaging in a cam-groove, 446, in the cam 447. As the cylinder 180 revolves the roller 445 is moved outwardly by the cam-groove 446, imparting, through the lever 444, shaft 443, and sectors 442 and 441, a retarding motion to the fingers 439. The same object may be attained by stopping the motion of the fingers 449, as may be desired. After the bag has been retracted the grippers 438 and 439 both move forward into their positions of rest, as shown in Fig. 42.

The second method shown in Figs. 44 to 46 performs precisely the same bodily retraction of the bag as that just described, the only point of difference being in the method of gripping the bag itself. Here the retracting-fingers 450 and 451, carried by the cylinder, are pivoted on a shaft, 452, in the cylinder 180, and receive a retracting motion by means of an arm, 453, carrying a roller, 454, engaging in a cam-groove, 455, of the cam 456, fastened to the hub 282 of the bracket 184. The upper ends of the retracting-fingers 450 and 451 are provided with upper retracting-fingers, 457 and 458, fastened to a shaft, 459, which shaft oscillates in these fingers 450 and 451, being vibrated by an arm, 460. (Shown in an enlarged view in Fig. 47.) This arm 460 is rocked in and out by posts 461 and 462, (shown in section in the drawings,) they being fixed to the main bracket of the machine. To the shaft 459 is secured a small cam, 463, against which a bolt, 464, is pressed by means of a spring, 465, which bolt and spring are held by a projection upon the finger 450. This construction of a pressing-bolt operating in connection with fingers is similar to that shown in Figs. 28 and 29 of our United States Patent No. 331,722, dated December 1, 1885. In this combination of parts the end of the bag-blank is gripped between the retracting-fingers 450 and 451 and the upper fingers, 457 and 458, as shown in Fig. 44. A retarding motion is then given to these fingers, drawing the bag-blank into the position shown in Fig. 45.

We will next proceed to describe a modification of the mechanism for operating the fingers upon the sweeper for drawing down the partially-folded bag into the diamond shape. This is shown in Figs. 48 and 49. Here the rod 203 supports the cam 213 and sector-lever 204, with its arm 205, all similar to those shown in the principal figures. In Figs. 48 and 49 the fingers are constructed at their lower ends substantially as shown in the principal figures, and are arranged and operated as follows: Two fingers, 468 and 469, are pivoted at 470 and 471 on the arm 205 of the lever 204, and are provided with sectors at their upper ends, which mesh into one another. The finger 468 is made in the shape of a lever, whose upper end carries a roller, 472, engaging in the cam-groove of the cam 213. As the arm 205 vibrates, as described in the principal figures, the lever-finger 468 communicating motion to the finger 469 at proper intervals through the cam 213, the fingers are swung together and may be drawn from the forward end of the diamond.

These various alternate devices will form the subject-matter of future applications for patents, and therefore have only been broadly described in order to point out similarity in the object accomplished.

We disclaim the specific form of retracting apparatus shown in Figs. 35 and 36 and that shown in Fig. 37, because those forms were invented by Edward E. Claussen; and we disclaim the specific form of retracting apparatus shown in Figs. 42 and 43, because it was invented by William H. Honiss alone; and we disclaim herein the specific form of retracting apparatus shown in Figs. 38 and 39 and that shown in Figs. 40 and 41 and that shown in Figs. 44, 45, 46, and 47, because we will claim those in separate applications for Letters Patent of the United States: nor do we herein claim the mechanical motions which we describe as working the blades 132 and 136 upon the top of the rocking carriage 80, for those motions are applicable to the performance of a variety of functions upon rocking carriages in a variety of machinery, and will be made the subject of a separate application by us for a patent of the United States.

Having thus described our invention, we claim—

1. The combination of drawing-rolls to bring the tubing into the machine, a carriage provided with a clamping apparatus to seize and hold that tubing, and two knives and a striker between those rolls and that carriage operating to sever the tubing when the rolls and the carriage have clamped it and have made a slack therein, all substantially as described.

2. The combination, in a bag-machine, of the folding-bed thereof, two oppositely-disposed levers, each carrying a pair of blades, substantially as described, the cams 130 and 131, working those levers, and the cam 155 and connecting mechanism, substantially as described, working one member of each pair of those blades, all substantially as described.

3. The combination of the rocking carriage 80, the levers 122 and 123, pivoted to that carriage and provided with the blades 136 and 137, respectively, the cams 130 and 131, working those levers, and the cam 155 and connecting mechanism, substantially as described, working those blades, all substantially as described.

4. The combination of the rocking carriage 80, the presser-plate 98, rising and lowering upon that carriage, the cam 130, and mechanism, substantially as described, between that cam and that presser-plate and operating to work the latter, all substantially as shown in Figs. 32, 33, and 34 of the accompanying drawings, and described in the foregoing specification.

5. The combination of the rocking carriage 80, the lifter-plate 164, pivoted to that carriage and projecting forward therefrom, the cam 172, and mechanism, substantially as described, between that cam and that lifter-plate and operating to work the latter, all substantially as described.

6. The combination of a reciprocating carriage carrying a clamping apparatus, the plate 214, oscillating forward on the arc of a circle, and the lifting-plate 164, the working end of which moves forward on a curved line corresponding with that arc, so as to clasp the forward end of the diamond between those two plates and to deliver the same to mechanism adapted to receive it, all substantially as described.

7. The combination of two mated bent sweeper-fingers reciprocating toward and from each other crosswise of the bag-blank, and reciprocating side by side lengthwise of the bag blank, all substantially as described.

8. The combination of the two axially-oscillating sweeper-shafts 206 and 207, provided with the terminal sweeper-fingers 206′ and 207′, respectively, and worked together by means of the sector-pinions 208 and 209 while oscillating side by side, all substantially as described.

9. The combination of a reciprocating sweeper-arm carrying oppositely-disposed reciprocating sweeper-fingers and a cam operatively connected with those fingers for working them during the stroke of the sweeper-arm, all substantially as described.

10. The combination of the oscillating arm 205, the shafts 206 and 207, carried on that arm and having bent sweeper-fingers at the ends thereof, and a cam operatively connected with those shafts and imparting thereto simultaneous movements in opposite directions, all substantially as described.

11. The combination of lower and upper gripper-rolls, the latter being divided by a clear space in the middle, and a reciprocating sweeper having its stroke extending into that space and operating to draw the forward end of the diamond into the bite of the upper and lower rolls, all substantially as described.

12. The combination of lower and upper gripper-rolls, the latter being divided by a clear space in the middle, the plate 164 under the diamond, and the plate 214 over the diamond, both plates operating to clasp the forward extremity of the diamond and to carry it into that clear space, so as to deliver the diamond to the bite of the lower and upper gripper-rolls, all substantially as described.

13. The combination, in a bag-machine, and with the folding-bed thereof, of side clips rearward of the second flap, a presser or pressers operating on the bed rearward of the side clips to clamp to the bed the rearward end of the bag-blank, and a retracting finger or fingers operating laterally against the bag-blank between said presser and clips, whereby the forward end of said blank is drawn back under said clips for the folding over of the second flap, substantially as described.

14. The combination, in a bag-machine, and with the traveling folding-bed thereof, of side clips carried with said bed rearward of the second flap, a presser or pressers operating on the bed rearward of the side clips to clamp to the bed the rearward end of the bag-blank, and a retracting finger or fingers carried on the bed and operating laterally against the bag-blank between said presser and clips,

whereby the forward end of said blank is drawn back under said clips for the folding over of the second flap, substantially as described.

15. The combination, in a bag-machine, and with the cylindrical traveling folding-bed thereof, of the side clips rearward of the second flap of the bag-blank, a presser operating to clamp said blank rearward of said clips, and a retracting finger or fingers operating outwardly against the blank between said clips and said presser, whereby said blank is drawn back under the clips for the folding of the second flap thereof, substantially as described.

16. The combination, with the revolving cylinder 180 and with the presser acting against said cylinder, of the side clips, 285 286, the retractor pivoted to the cylinder, and cams and connections actuating said clips and retractor, all constructed and operating substantially as described.

17. The combination of cylinder 180, having groove 258, creasing-blade operating in said groove, and clips 285 286, carried on the cylinder and each having one finger forward and one rearward of said groove, all constructed and operating substantially as described.

18. The combination, in a bag-machine, of the traveling folding-bed having grooves crosswise to the motion thereof, mechanism holding the bag-blank on said bed over said grooves, creasers operating in connection with the grooves to crease the blank, rolls for receiving the creased blank from said bed, and the blades operating to deliver the blank folded at said creases from said bed to said rolls, all substantially as described.

19. The combination, in a bag-machine, of the traveling folding-bed carrying the partially folded and creased bag-blank, rolls 335 336, the lower blades, 315 and 316, and blade 314 above and between said lower blades, all arranged and operating substantially as described.

WILLIAM A. LORENZ.
WILLIAM H. HONISS.

Witnesses to Wm. A. Lorenz:
ALBERT H. WALKER,
CHAS. T. HUGHES.
Witnesses to Wm. H. Honiss:
JAMES MCKAY,
GEO. HILDEBRAND.

(No Model.)

7 Sheets—Sheet 1.

D. APPEL.

BAG MACHINE.

No. 387,573.

Patented Aug. 7, 1888.

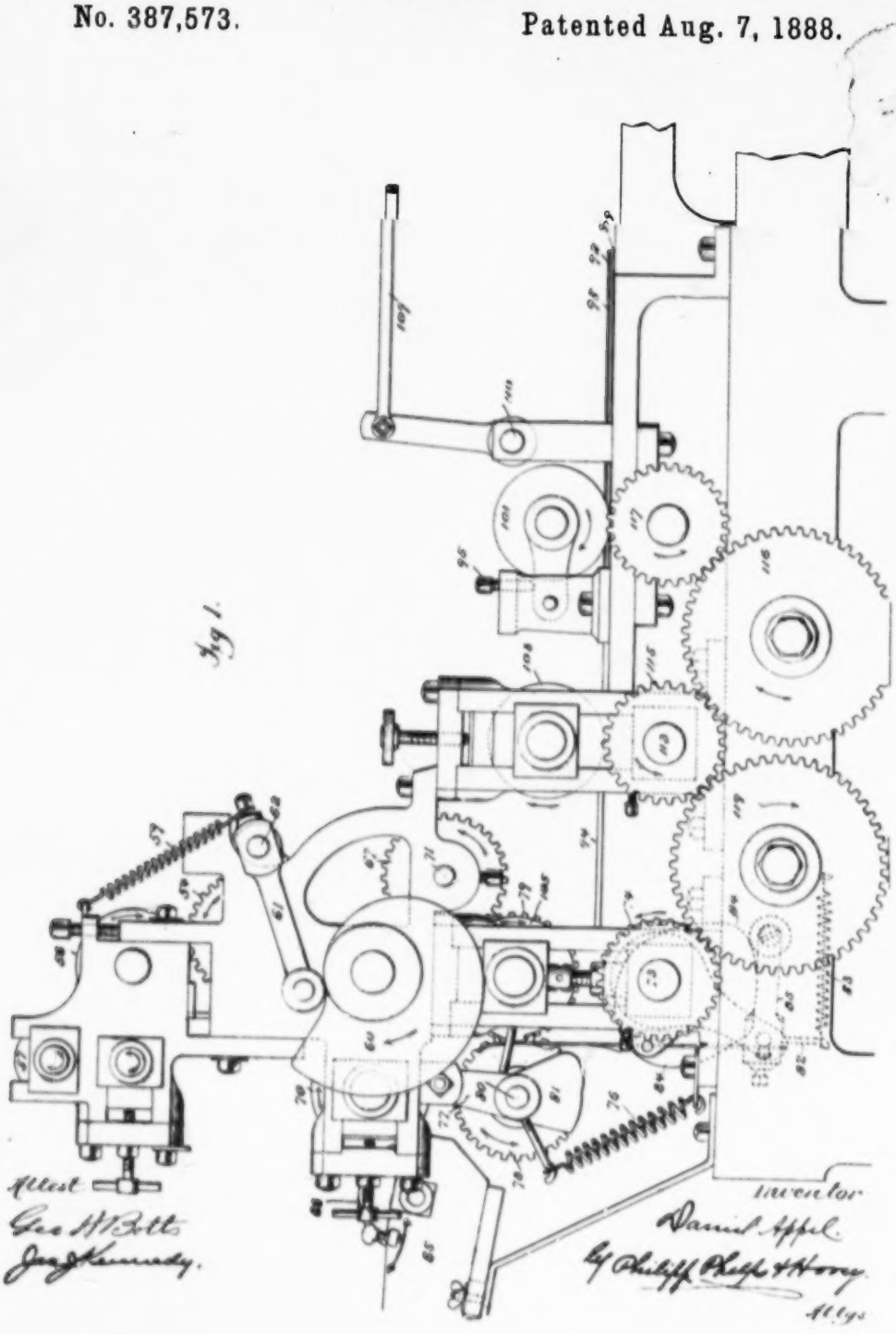

(No Model.)

7 Sheets—Sheet 2.

D. APPEL.

BAG MACHINE.

No. 387,573. Patented Aug. 7, 1888.

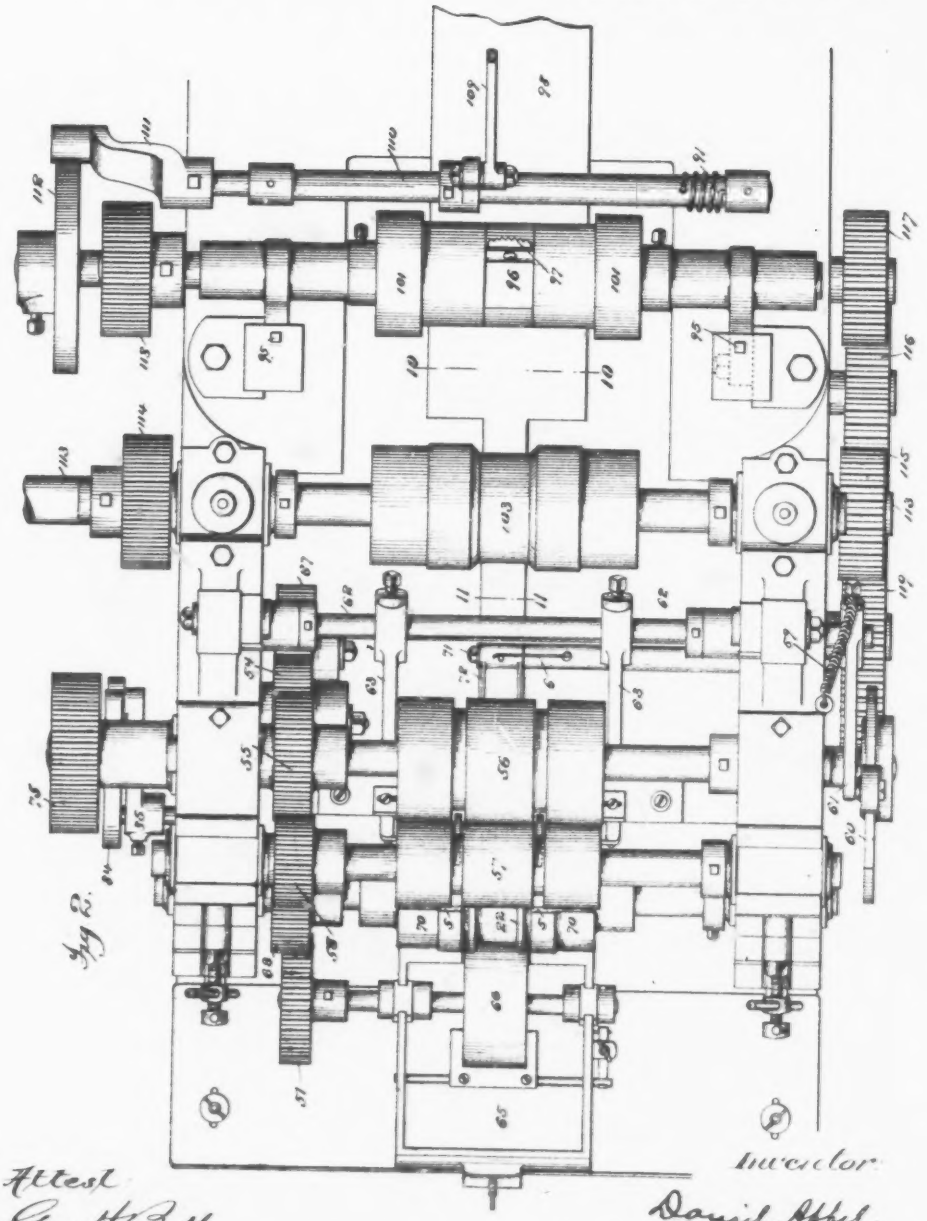

Fig 2.

Attest
Geo. H. Fitch
Jas. J. Kennedy.

Inventor
Daniel Appel.
by Philipp Philipp & Hovey
Attys

(No Model.)

7 Sheets—Sheet 3.

D. APPEL.

BAG MACHINE.

No. 387,573. Patented Aug. 7, 1888.

Fig 3.

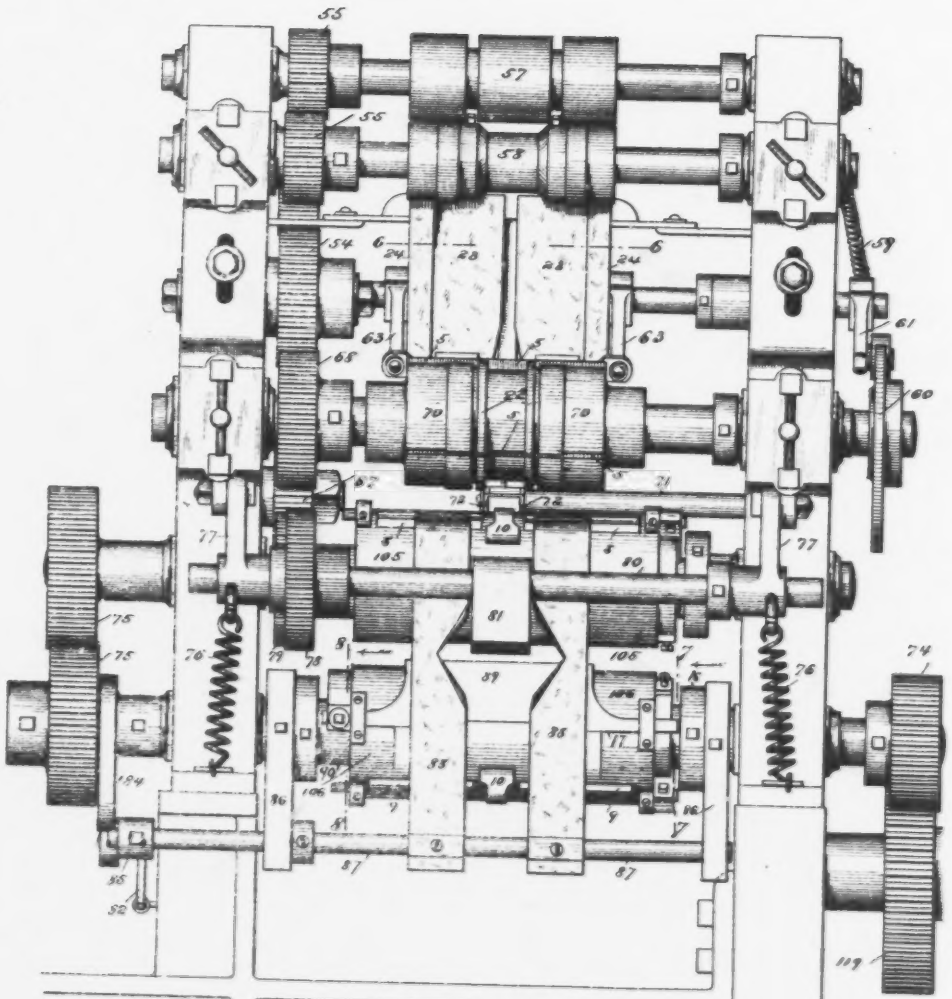

Attest:
Geo. H. Bell.
Jas. J. Kennedy.

Inventor.
David Appel.
by Philipp Philipp & Thorp.
Attys.

(No Model.)

7 Sheets—Sheet 4.

D. APPEL.

BAG MACHINE.

No. 387,573. Patented Aug. 7, 1888.

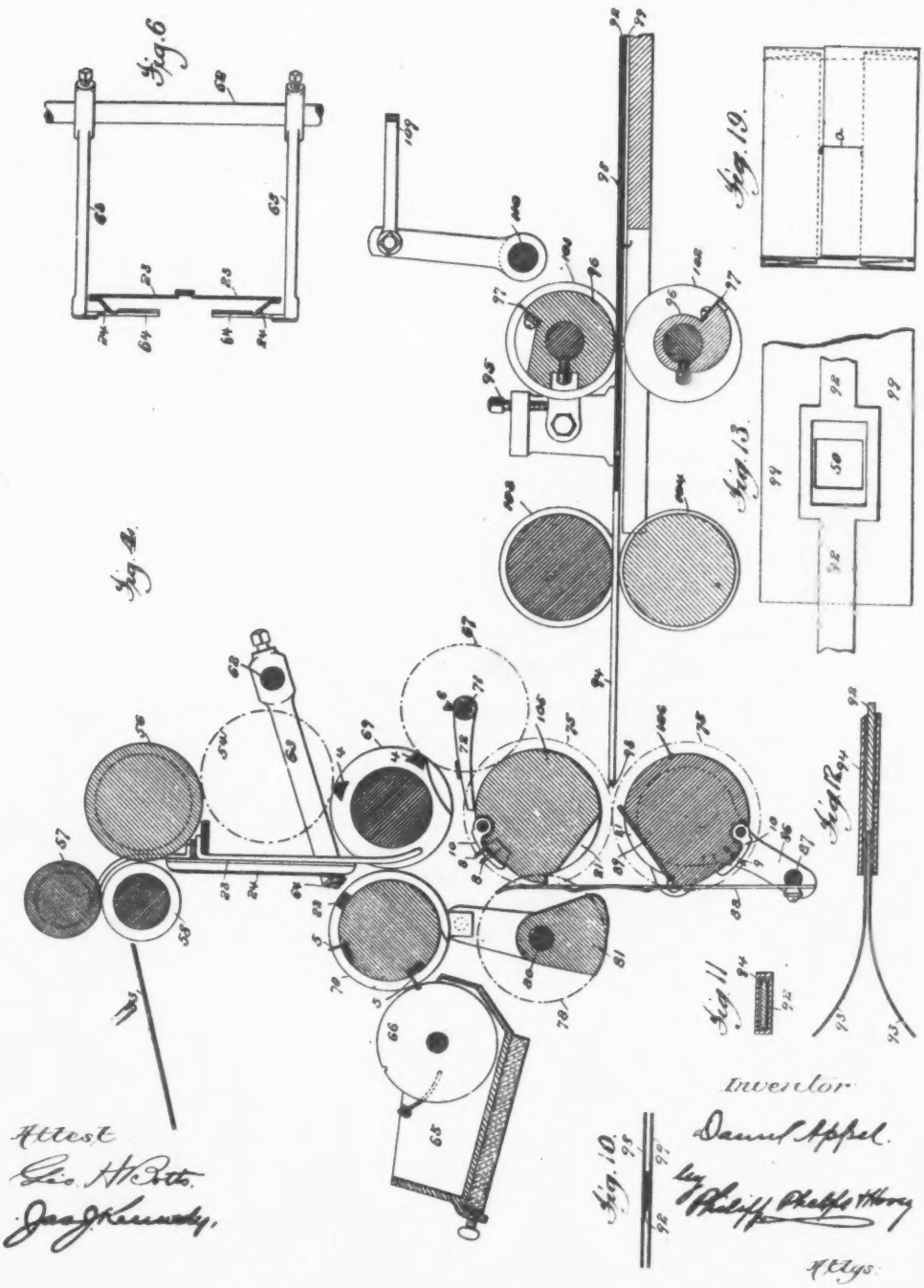

(No Model.)

7 Sheets—Sheet 5.

D. APPEL.

BAG MACHINE.

No. 387,573. Patented Aug. 7, 1888.

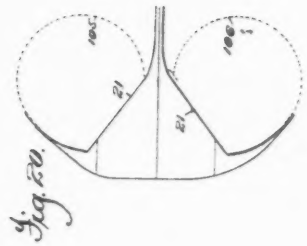

Fig. 20.

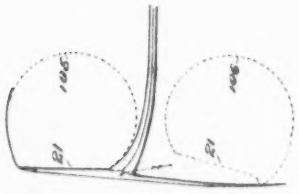

Fig. 22.

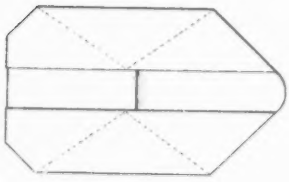

Fig. 23.

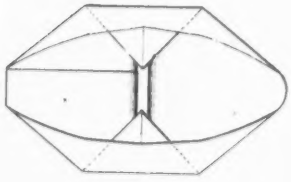

Fig. 21.

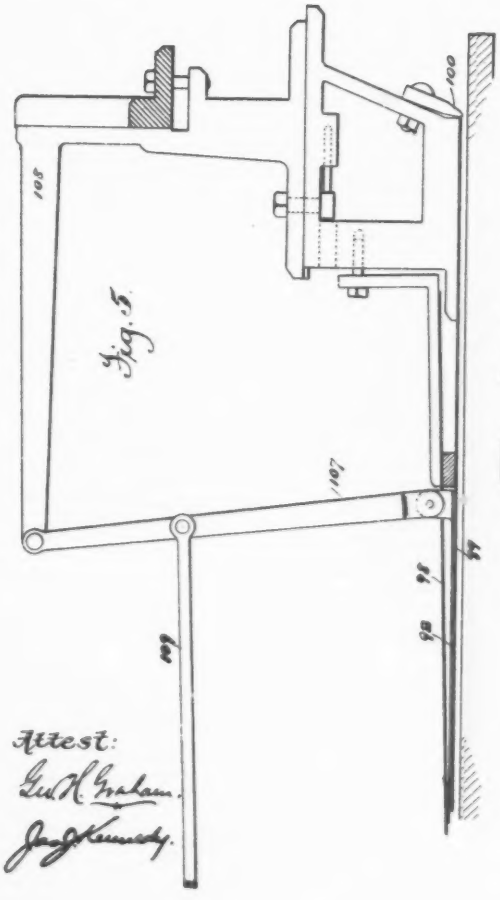

Fig. 5.

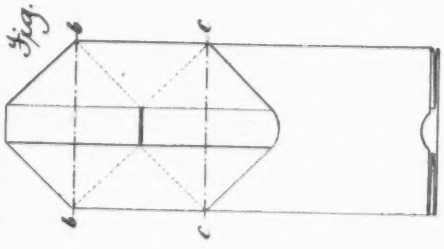

Fig. 24.

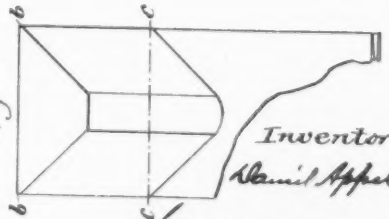

Fig. 25.

Attest:
Geo. H. Graham.
Jno. J. Kennedy.

Inventor:
Daniel Appel.
by Philipp, Philipp & Thomas
Attys

(No Model.)

7 Sheets—Sheet 6.

D. APPEL.

BAG MACHINE.

No. 387,573

Patented Aug. 7, 1888.

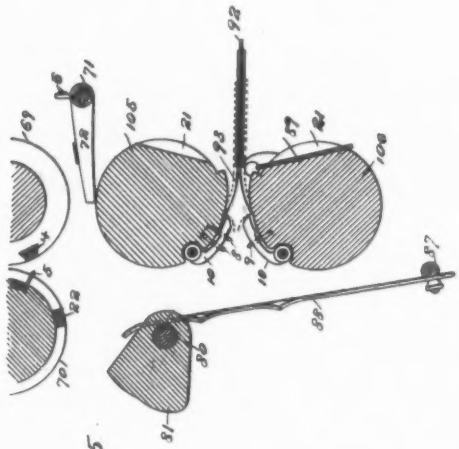

Fig. 15

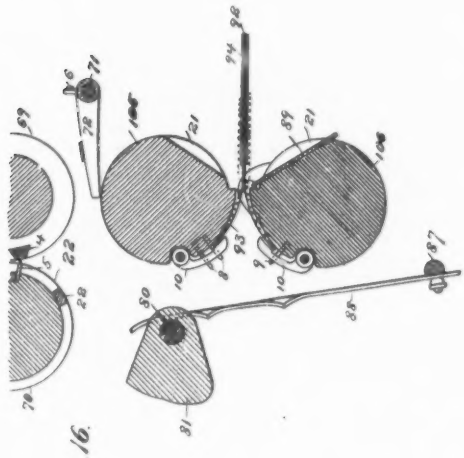

Fig. 16

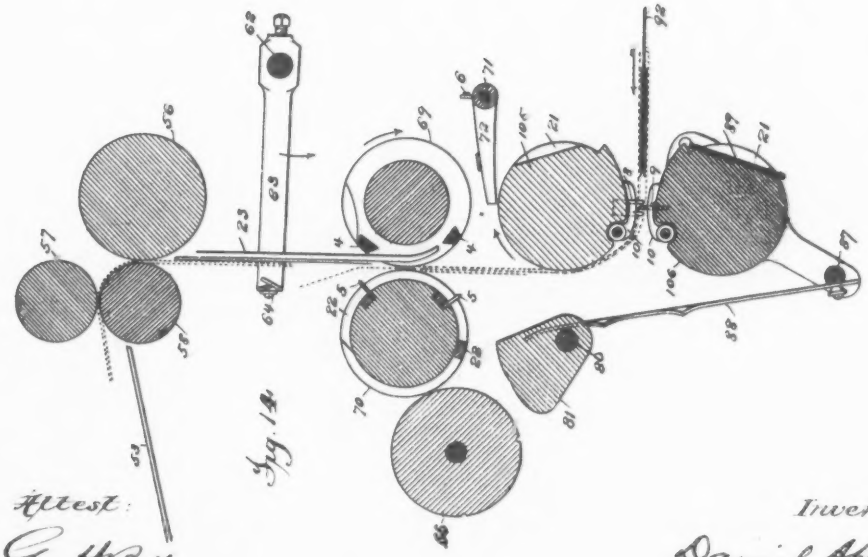

Fig. 14

Attest:

Geo. H. Bott.

Jas. J. Kennedy

Inventor

Daniel Appel.

by Philipp Phelps & Hovey

Attys.

(No Model.)

7 Sheets—Sheet 7.

D. APPEL.

BAG MACHINE.

No. 387,573

Patented Aug. 7, 1888.

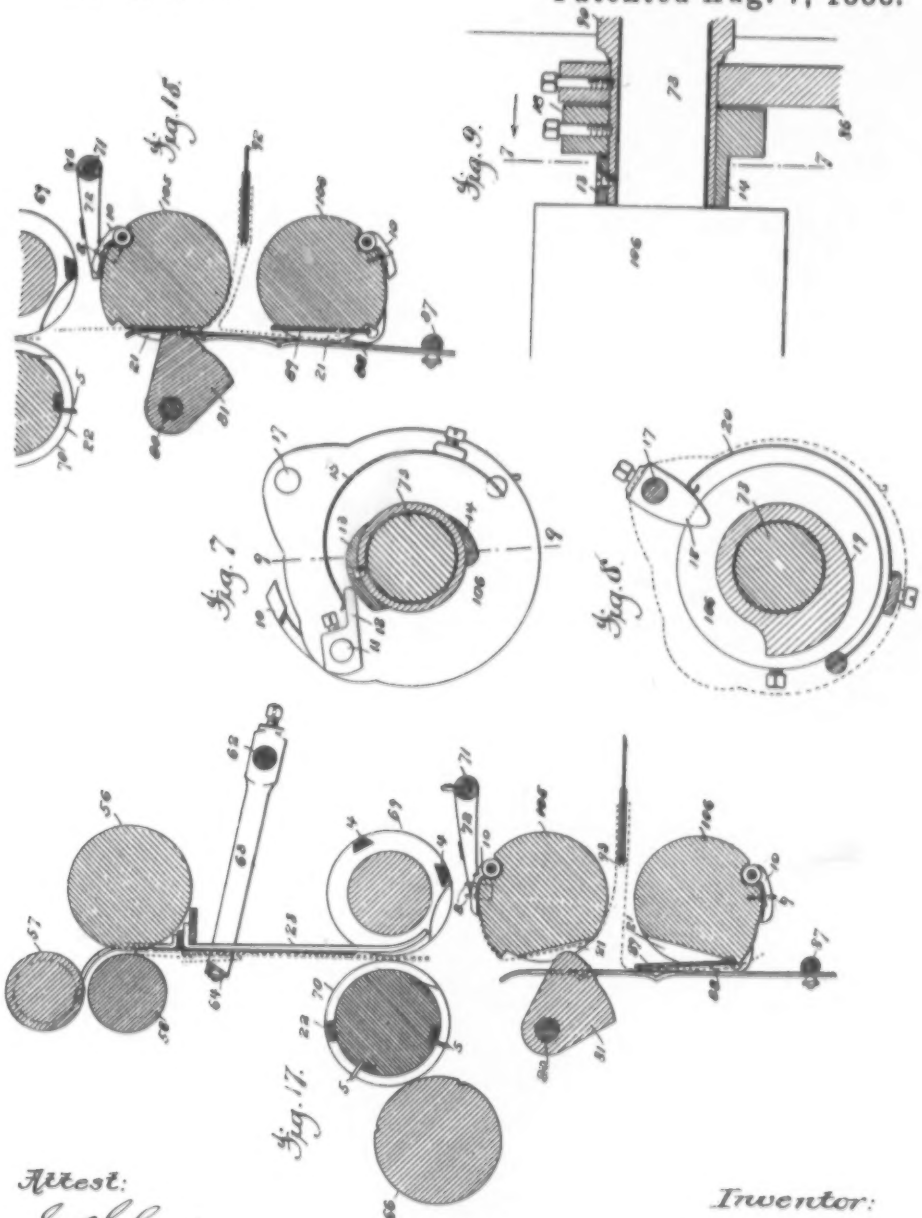

Attest:

Geo. H. Graham.

Jas. J. Kennedy.

Inventor:

Daniel Appel.

by Philipp Phelps & Hoop

Attys.

UNITED STATES PATENT OFFICE.

DANIEL APPEL, OF CLEVELAND, OHIO, ASSIGNOR TO THE UNION PAPER BAG MACHINE COMPANY, OF PHILADELPHIA, PENNSYLVANIA.

BAG-MACHINE.

SPECIFICATION forming part of Letters Patent No. 387,573, dated August 7, 1888.

Application filed October 15, 1887. Serial No. 252,421. (No model.)

To all whom it may concern:

Be it known that I, DANIEL APPEL, a citizen of the United States, residing at Cleveland, county of Cuyahoga, and State of Ohio, have invented certain new and useful Improvements in Bag-Machines, fully described and represented in the following specification and the accompanying drawings, forming a part of the same.

This invention relates to a mechanism for the manufacture of paper bags of that class known as "bellows-sided satchel-bottom bags," and particularly to a mechanism for the manufacture of a bag such as that shown and described in United States Reissued Letters Patent No. 10,083, it being the object of the invention to provide a mechanism which, operating upon a continuous web or sheet, will perform all the operations necessary to produce and deliver completed bags of the character stated.

As a full understanding of the various improvements constituting the invention can only be given by an illustration and a detailed description of an organized mechanism embodying said improvements, all preliminary description of the invention will be omitted and a detailed description given, reference being had to the accompanying drawings, in which—

Figure 1 is a side elevation of the principal parts of an organized bag-machine embodying the present invention. In this view the mechanism for converting the web of paper into a bellows-sided tube is omitted, as the mechanism for this purpose is of substantially the common and well-known form. Fig. 2 is a plan view of the parts shown in Fig. 1. Fig. 3 is an end elevation of the machine, looking from the left of Figs. 1 and 2, the apparatus for applying the necessary lines of paste to the bottom of the bag being omitted. Fig. 4 is a longitudinal sectional elevation of the principal parts of the mechanism shown in Figs. 1, 2, and 3. Fig. 5 is a similar view of the tubing mechanism. Fig. 6 is a horizontal section taken on the line 6 of Fig. 3. Fig. 7 is a section taken on the line 7 of Figs. 3 and 9, looking toward the left or inward from the frame of the machine. Fig. 8 is a similar view taken on the line 8 of Fig. 3, also looking toward the left. Fig. 9 is a section taken on the line 9 of Fig. 7. Fig. 10 is a cross-section of the former, taken on the line 10 of Fig. 2. Fig. 11 is a cross section taken on the line 11 of the same figure. Fig. 12 is an enlarged sectional view of the spreader and its guide. Fig. 13 shows a detail which will be hereinafter referred to. Fig. 14 is a view similar to Fig. 4, illustrating the first step in the formation of the bag-bottom. Figs. 15 and 16 are similar views illustrating the next succeeding steps in the formation of the bag-bottom. Figs. 17 and 18 are similar views illustrating subsequent steps. Fig. 19 is a view of a portion of the tube. Figs. 20 to 25 are views showing particularly the positions which the material takes during the different stages of the formation of the bag-bottom.

Referring to said drawings, it is to be understood that the mechanism for forming the web of paper into a bellows sided tube is or may be of substantially the ordinary form, and therefore will require but a very brief mention herein. This mechanism is partly illustrated in Fig. 5, and as therein shown consists of a breaking or guiding edge, 100, arranged to extend transversely across the central portion of the web, and around which the web, being led from a roll mounted in a higher plane, is deflected, so that its side portions, which are to be folded over to form the tube, will stand up sufficiently and be sufficiently slack to permit them to be acted upon by the turning-fingers (not shown) and be turned over above the central portion of the web in the usual manner. The former is of substantially the usual construction, consisting of two plates, 98 99, supported a short distance apart, and between which the sides of the web are forced by suitable side guides or fingers, (also not shown,) so as to be folded inward and produce the ordinary and well-known bellows-sided tube. The pasting mechanism for uniting the edges of the web to form the longitudinal seam of the tube is not herein shown, as it may be of any of the well-known forms. After being thus formed, the tube passes between a pair of cutting-rolls, 101 102, and thence between a pair of feeding-rolls, 103 104. The plates

98 99, composing the former, extend forward and pass between the cutting-rolls 101 102, the rolls being cut away to permit the passage of the former. The rolls 101 102 are provided with blades 97, which are secured to sections 96 of the rolls, which sections are adjustable upon the shafts of the rolls to permit of the easy and accurate adjustment of the blade. These rolls are made of a circumference equal to the length of the bag to be produced, so that at each revolution the blades 97, coming together through openings 50, (see Fig. 13,) provided at that point in the plates 98 99, operate to form short transverse cuts *a* (see Fig. 19) through both plies of the tube at its center. The cutting-roll 101 is mounted in vertically-movable bearings, which are operated upon by adjusting screws 95, so as to regulate the nipping-contact of the two rolls. The plates 98 99, constituting the former, terminate a short distance in advance of the cutting-rolls 101 102, but are provided with a tubular extension, 94, which passes forward between the feeding-rolls 103 104, the rolls being cut away at their centers to permit the passage of the tube 94, and terminates a short distance in the rear of a pair of opening-rolls 105 106, which will be presently referred to.

Located in and guided by the tube 94 is a reciprocating forked spreader, 93, the arms of which are made of light spring metal, and are arranged to open apart when protruded from the end of the guide 94 and to be closed together as they are retracted within the guide. The spreader 93 is provided with a rearward extension, 92, which extends rearward between the plates 98 99, it being provided with an opening (see Fig. 13) for the passage of the blades 97, and is pivotally connected to a lever, 107, (see Fig. 5,) which is fulcrumed upon a bracket, 108, and is connected by a rod, 109, with an arm extending from a rock-shaft, 110, having an arm, 111, which is acted on by a cam, 112, mounted upon the shaft of the cutting-roll 102. These parts are so arranged that at each revolution of the cutting-rolls the cam 112 will operate, through the connections which have been described, to move the spreader 93 forward and permit its spring-fingers to protrude from the end of the guide 94 and pass between the opening-rolls 105 106, and these parts are so timed and adjusted that as the spreader is thus advanced its spring-fingers will come into contact with the sides of the tube just in the rear of the slits *a*, made by the blades 97. The return movement of the spreader is effected by means of a spring, 91, with which the shaft 110 is provided. The feeding-rolls 103 104 are connected by gears 114, and are positively driven by power applied to the shaft 113 of the roll 104. The cutting-rolls 101 102 are also geared together by gears 118, and are positively driven from the shaft 113 by means of gears 115 116 117.

The opening-rolls 105 106 are mounted and equipped as follows: The rolls are arranged a short distance apart, as will be observed, and are journaled in boxes 90, (see Fig. 9,) which are provided with inward tubular extensions which surround the shafts of the rolls. Each of the rolls is provided with a gripper, 10, which is located at the middle of the roll and in such position that as the rolls revolve the grippers of the two rolls will come together at each revolution. These grippers are mounted upon shafts 11, which are journaled in bearings formed on the ends of the rolls. The shafts 11 extend slightly beyond the rolls, and are provided with arms 12, (see Fig. 7,) which are acted upon by stationary cams 13 14, (see Fig. 7,) so as to open the grippers slightly twice at each revolution of the rolls. The closing movement of the grippers is effected by means of springs 15, which act upon the arms 12. The cams 13 are secured directly to the inward tubular extensions of the boxes 90, while the cams 14 project from adjustable collars 16, mounted upon said tubular extensions. By this means the cams are adjustable with relation to each other, so as to secure the opening of the grippers at the proper times. The cams for operating only one of the grippers are illustrated in detail in the drawings; but as the cams for the two grippers are exactly the same this single illustration applies to both.

The roll 106 is provided with two cutting-blades, 9, which extend from the sides of the grippers 10 to the end of the roll, and the roll 105 is provided with parallel blades 8, which are arranged in a similar position with relation to the gripper 10 of that roll and coact with the blades 9 to complete the severance of the tube.

A short distance in the rear of the grippers 10 these rolls are flattened, as indicated at 21, for a considerable distance, the purpose of which will hereinafter appear. Resting upon this flattened portion of the roll 106 is a creasing-blade, 89, the shaft 17 of which is journaled in the ends of the roll, and is provided at one end with an arm, 18, (see Fig. 8,) which is engaged by a cam, 19, mounted upon or made integral with the tubular extension of the box 90 in such manner as to periodically rock the creasing-blade 89 outward away from the roll. The return movement of the blade is effected by means of a spring, 20, which acts upon the arm 18.

Coacting with the opening-rolls 105 106 are a pair of presser-plates, 88, which extend upward in front of the rolls, and are mounted upon a shaft, 87, which is supported in arms 86, extending from the tubular extensions of the boxes 90. The shaft 87 is provided with an arm, 85, which is acted upon by a cam, 84, mounted upon the shaft of the roll 106 in such manner as to periodically rock the plates 88 inward against the rolls. The movement of the plates in the opposite direction is effected by means of a spring, 83, which acts upon an

arm, 82, of the shaft 87. Coacting also with the opening-rolls 105 106 is a rotating pressing-head, 81, which is mounted upon a shaft, 80, and is driven through gears 78 79 from the shaft of the roll 105, these gears being so proportioned that the head makes turn for turn with the opening-rolls. The shaft 80, which carries the head 81, is mounted in swinging arms 77, which are acted upon by springs 76, so as to hold the gears 78 79 in engagement and yet allow the head to yield slightly as it comes in contact with the roll 105. The opening-rolls are connected by gears 75, and are positively driven from the gear 115, through an intermediate, 119, which engages with a gear, 74, upon the shaft 73 of the roll 106.

The function of the part of the mechanism which has just been described is to open out the end of the tube to what is commonly known as the "diamond form," preparatory to folding over the points of the diamond to form the satchel-bottom.

The operation of the various devices in performing this function is as follows: The bellows-sided tube, having been formed and provided with the short central transverse cuts, *a*, as before explained, passes between the feeding-rolls 103 104, and is advanced beyond the end of the guide 94 and passes between the opening-rolls 105 106. As the portion of the tube containing the transverse cuts *a* arrives between the opening-rolls, the blades 8 9, coming together, (see Fig. 14,) complete the severance of the tube, and immediately after this the arms 12 engage with the cams 13 and open the grippers 10, as shown in Fig. 15. As soon as this takes place the spreader 93 is advanced, as hereinbefore described, and as it is protruded from the end of the guide 94 its spring-fingers separate and engage with the sides of the tube just in the rear of its severed end, and as the spreader continues to advance it spreads the sides of the tube and enters them beneath the grippers 10, as shown in Fig. 16. As soon as this is accomplished the spreader is quickly retracted, and the arms 12 passing off the cams 13, the grippers are closed, so as to grasp and retain the sides of the tube. As the opening-rolls continue their revolution, the sides of the tube are drawn apart, so as to open out the end of the tube and strain its sides across the flattened portions 21, as shown in Figs. 4, 20, and 21. As this takes place, the cam 84 commences to swing the presser-plates 88 inward toward the opening-rolls, and at the same time the cam 19, acting on the arm 18, swings the creasing-blade 89 outward against the advancing presser-plates, so as to grasp the under side of the tube between the two and crease the line of the central transverse fold of the diamond, and directly after this takes place the pressing-head 81 passes between the presser-plates 88 and presses and holds the upper side of the tube against the flattened portion 21 of the upper roll, 105, as shown in Figs. 17, 22, and 23. Directly after this takes place the arms 12 come into engagement with the cams 14, so as to again open the grippers 10 and release the sides of the tube from the grippers, and at or about the same time the cam 19 passes out of engagement with the arm 18, so as to allow the creasing-blade 89 to be restored to its normal position, and the presser-plate 88, continuing to advance, presses the opened end of the tube against the flat bearings 21 of the opening-rolls, and thus complete the formation of the diamond, as shown in Figs. 18 and 24. To insure the release of the upper side of the tube, or what is the forward point of the diamond, from the gripper 10 of the roll 105, there are provided a pair of fingers, 72, which extend from a shaft, 71, and rest upon the roll at the sides of the gripper, and which operate to strip the forward point of the diamond from beneath the gripper as soon as the latter is opened. As soon as the point of the diamond is thus stripped from beneath the gripper the elasticity of the folded paper will cause the point to immediately assume an erect position and come into line with the body of the diamond, as indicated in Fig. 18. The fingers 72 are loosely mounted upon the shaft 71, and are pressed against the roll 105 by means of a light spring, 6. After the point of the diamond is thus released from the gripper 10 the end of the tube upon which the diamond has been formed is advanced by the roll 105 and the presser-head 81 until the forward point of the diamond is entered between a pair of creasing and pasting rolls, 69 70, which operate to apply the necessary lines of paste to the diamond and to crease the points preparatory to folding them over to close the bag-bottom. These rolls are connected by gears 68, and are driven through an intermediate, 67, from the gear 79 upon the shaft of the roll 105. The roll 70 is provided with ribs or raised portions 22, which receive paste from a roll, 66, running in an ordinary paste-vat, 65, and are arranged to apply the paste at the proper points upon the diamond fold as the latter passes between the rolls 69 70. The paste-roll 66 is driven from the roll 70 by a gear, 51. The roll 70 is also provided with two creasing-blades, 5, which coact with yielding portions 4 upon the roll 69 to crease the diamond upon the lines *b c*, to enable its points to be readily folded to close the bottom. The diamond, after passing between the rolls 69 70 and receiving the proper lines of paste and being creased at the proper points, as stated, passes upward between guides 23 24. Arranged in front of these guides and in position to act upon the points of the diamond is a vibrating folding-blade, 64, which is carried by arms 63, extending from a shaft, 62, having an arm, 61, which is acted on by the cam 60, mounted upon the shaft of the roll 69 and arranged to give a quick upward movement to the blade 64 at the proper period. The return movement of the blade 64 is effected by means of a spring,

53, which acts upon the shaft 62. Located at the upper ends of the guides 23 24 are a group of three folding and delivery rolls, 56 57 58, which are connected by gears 55 and are driven through an intermediate, 54, from the gear 68 of the roll 69. The creasing upon the lines *b c* will, as will be readily understood, cause the points of the diamond to take positions out of line with the body of the bag-bottom, as indicated in Fig. 14, so that as the forward point of the diamond arrives at the bite of the rolls 56 58 that point will be caught by the roll 58, which is cut away at its center, so as not to come in contact with the paste-lines upon the diamond, and be turned downward on the line *b*, so as to be folded over onto the body of the diamond, as shown in Fig. 25. Just as this takes place the cam 60 will give a quick upward movement to the blade 64, which blade will catch under the outstanding rear point of the diamond and fold it upward on the line *c* and against the body of the bag-bottom, as shown in Fig. 17, thus completing the operation and closing the bottom of the bag. The two points of the diamond thus folded over will pass successively between the rolls 56 58 and 57 58, so as to be pressed and set in position, and the completed bag will be discharged onto the platform 53, or into the control of a drier or other suitable mechanism.

What I claim is—

1. The combination, with the blade 9, for completing the severance of the tube, of the former having the openings 50, and the cutting-rolls 101 102, having adjustable portions 96, carrying co-operating blades 97, for making a preliminary central cut in the tube, both of said portions 96 being adjustable to secure the proper register between the preliminary and final cuts, substantially as described.

2. The combination, with the opening-rolls 105 106, having the flattened portions 21, of the presser-plates 88, substantially as described.

3. The combination, with the opening rolls 105 106, having the flattened portions 21, of the presser plates 88 and the creasing-blade 89, substantially as described.

4. The combination, with the opening-rolls having the flattened portions 21, of the presser-plates 88 and the rotating pressing-head 81, substantially as described.

5. The combination, with the opening-rolls having the flattened portions 21, of the presser-plates 88, the creasing-blade 89, and the rotating pressing-head 81, substantially as described.

6. The combination, with a cutting mechanism for making the short cuts *a* at the center of the tube, of the opening-rolls 105 106, provided with blades for completing the severance of the tube and with grippers for taking the sides of the tube, and the reciprocating spreader 93, for entering the sides of the tube beneath the grippers, substantially as described.

7. The combination, with the opening-rolls 105 106, set a distance apart, of the blade 9, carried by one of said rolls, and the parallel blades 8, carried by the other of said rolls, substantially as described.

8. The combination, with the opening-rolls having the flattened portions 21, of the presser-plates 88, the rotating pressing-head 81, and the creasing-rolls 69 70, substantially as described.

9. The combination, with the opening rolls 105 106, having the flattened portions 21, of the presser-plates 88, the rotating pressing head 81, the creasing-rolls 69 70, provided with the ribs 22, for applying paste, and the folding and pressing rolls 56 58, substantially as described.

10. The combination, with the opening-rolls 105 106, having the flattened portions 21, of the presser-plates 88, the pressing-head 81, the creasing and pasting rolls 69 70, the folding-blade 64, and the folding and pressing rolls 56 58, substantially as described.

In testimony whereof I have hereunto set my hand in the presence of two subscribing witnesses.

DANIEL APPEL.

Witnesses:

E. H. BOHM,

EDWARD DAVID.

(No Model.) 21 Sheets—Sheet 1.

C. B. STILWELL.

PAPER BAG MACHINERY.

No. 407,794. Patented July 30, 1889.

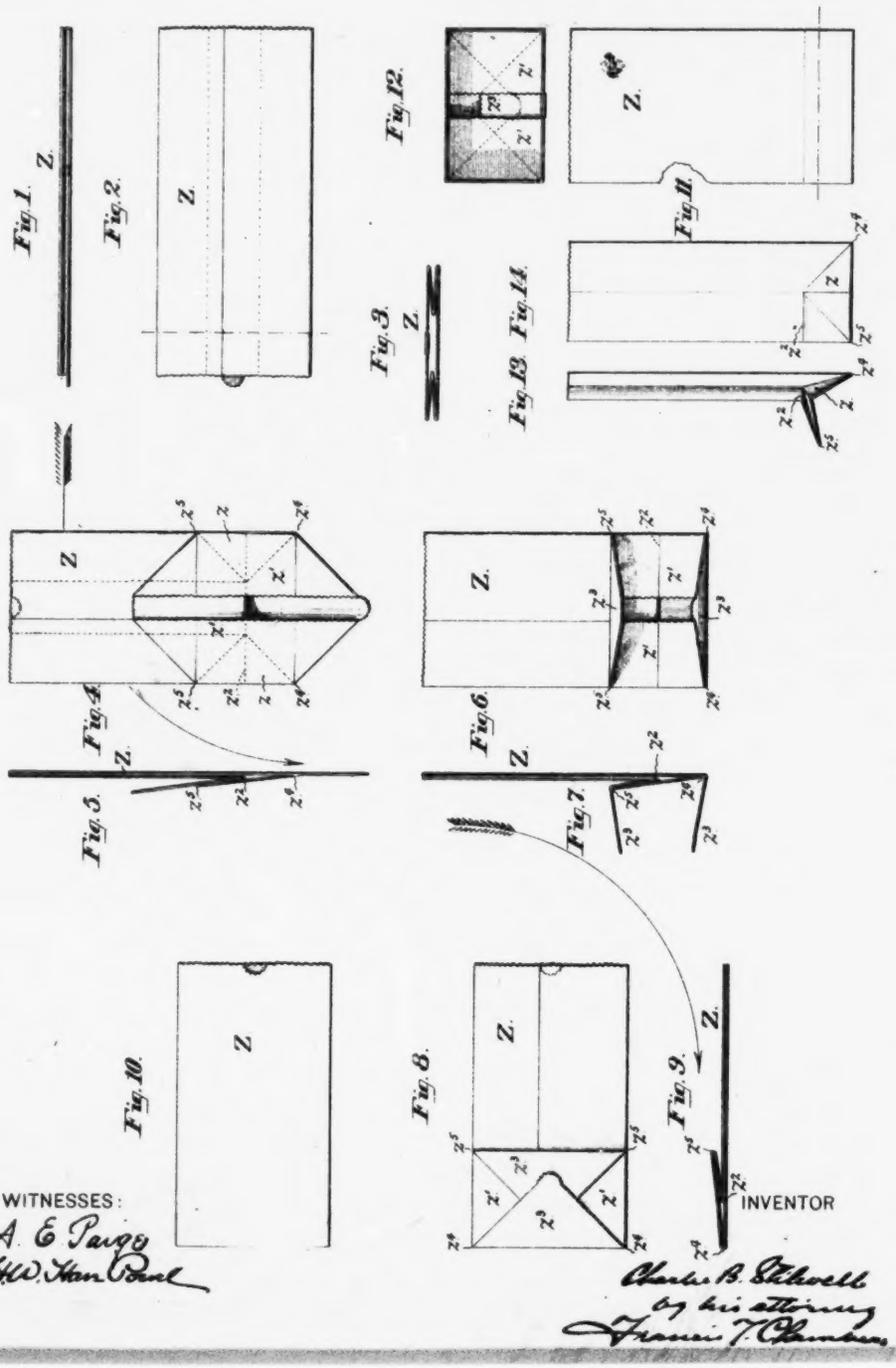

WITNESSES:
A. E. Paige
H. C. Van Bael

INVENTOR
Charles B. Stilwell
by his attorney
Francis T. Chambers

(No Model.) 21 Sheets—Sheet 2.

C. B. STILWELL.

PAPER BAG MACHINERY.

No. 407,794. Patented July 30, 1889.

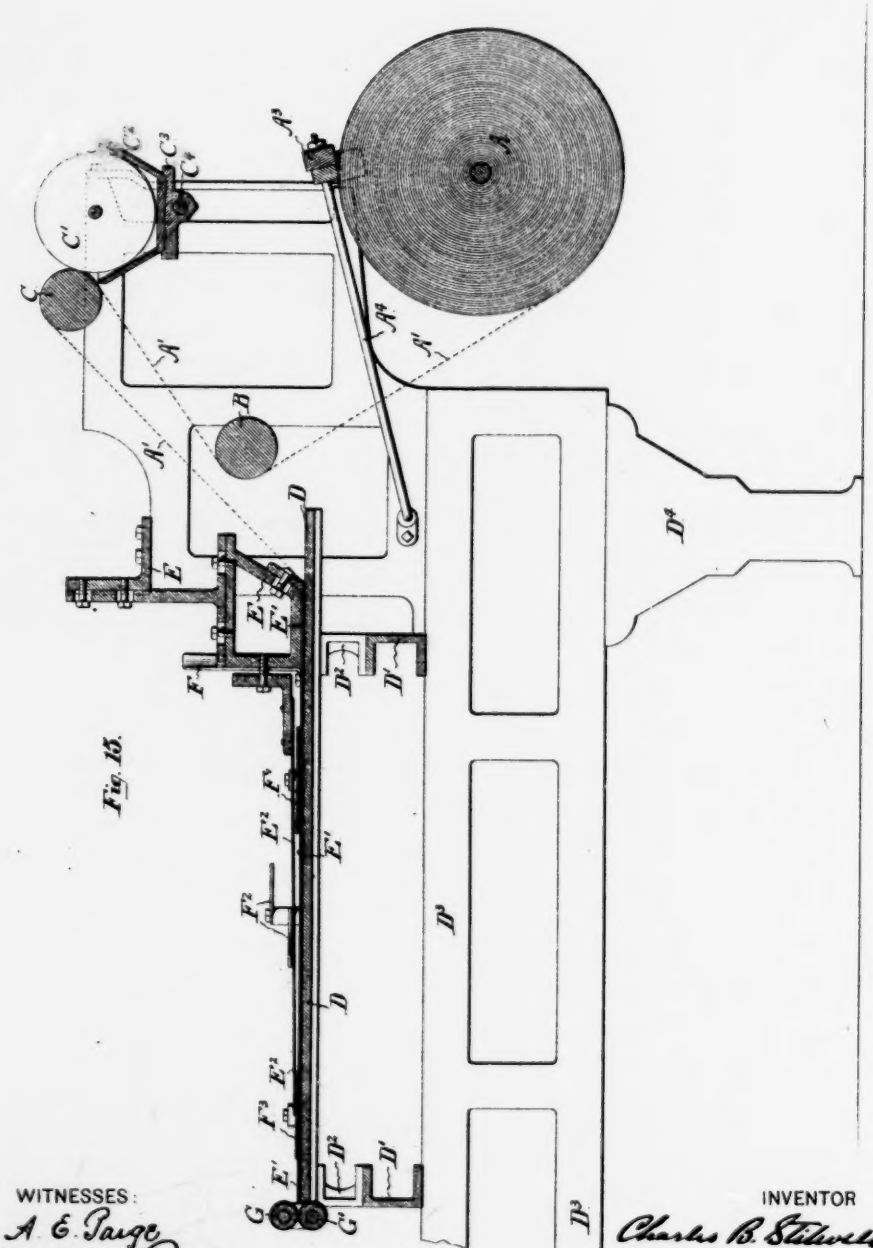

Fig. 15.

WITNESSES:
A. E. Paige
H. W. Hanbank

INVENTOR
Charles B. Stilwell
by his attorney
Francis T. Chambers

(No Model.) 21 Sheets—Sheet 3.

C. B. STILWELL.

PAPER BAG MACHINERY.

No. 407,794. Patented July 30, 1889.

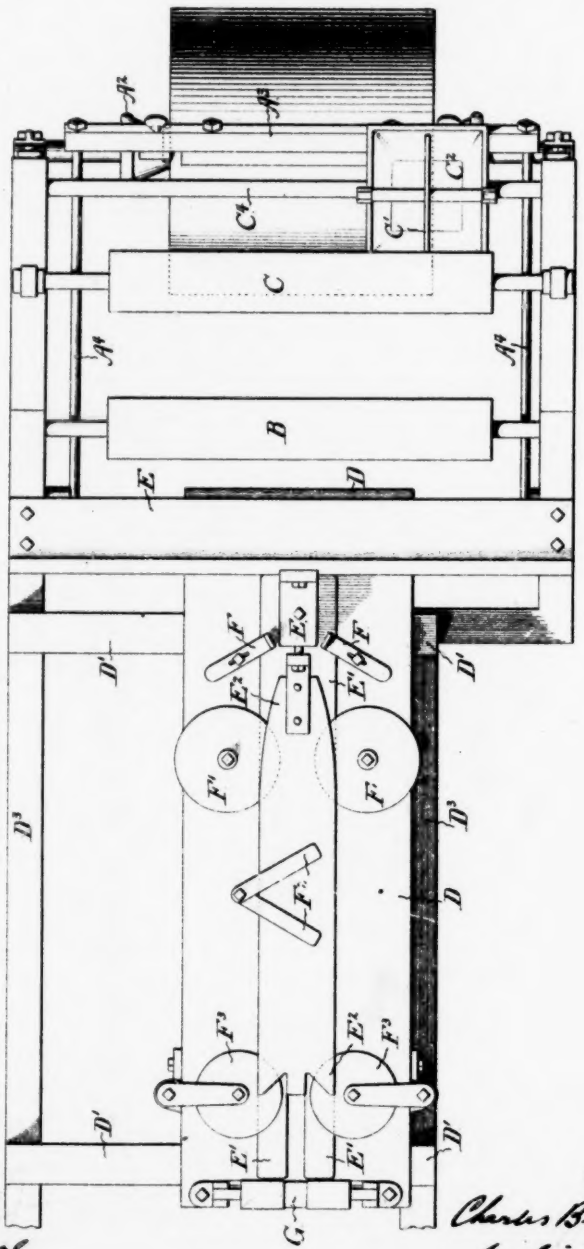

Fig. 16.

WITNESSES:
A. E. Paige
H. C. Hart Pond

INVENTOR
Charles B. Stilwell
by his attorney
Francis J. Chambers

(No Model.) 21 Sheets—Sheet 4.

C. B. STILWELL.

PAPER BAG MACHINERY.

No. 407,794. Patented July 30, 1889.

Fig. 17.

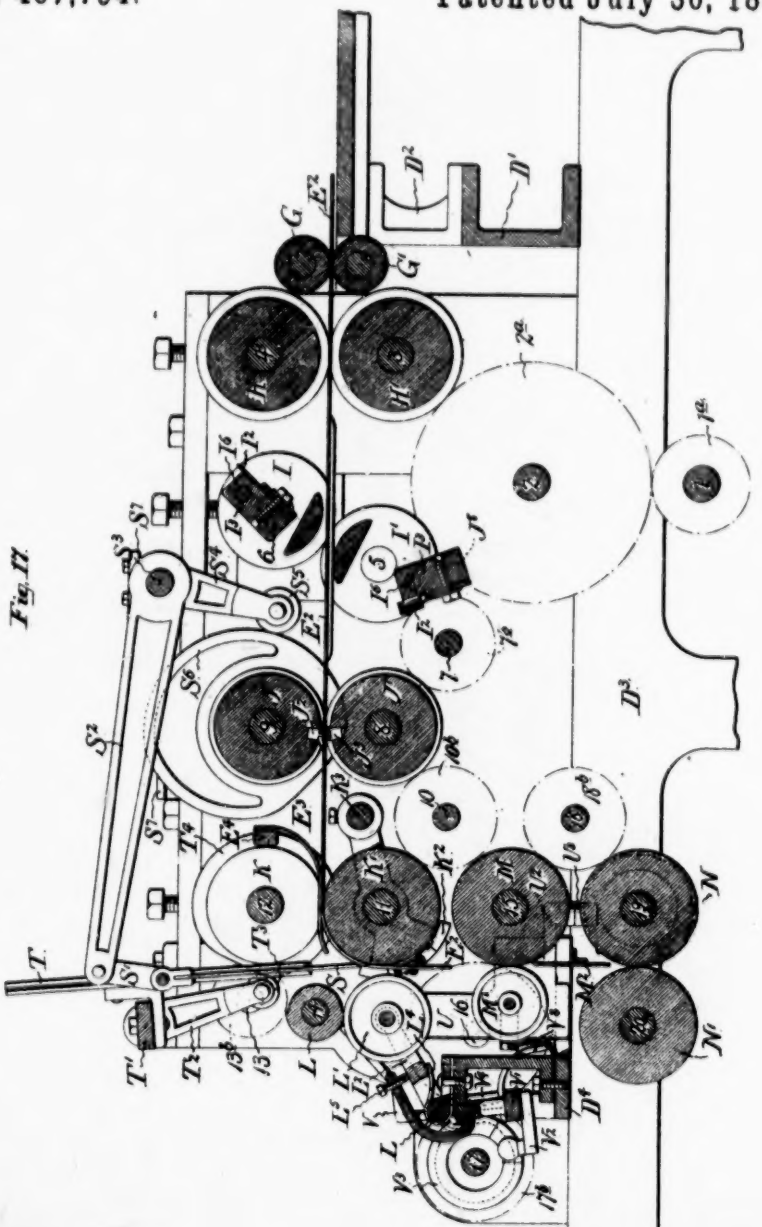

WITNESSES:
A. E. Paige
H. W. Van Pane

INVENTOR
Charles B. Stilwell
by his attorney
Francis L. Chambers

(No Model.) 21 Sheets—Sheet 5.

C. B. STILWELL.

PAPER BAG MACHINERY.

No. 407,794. Patented July 30, 1889.

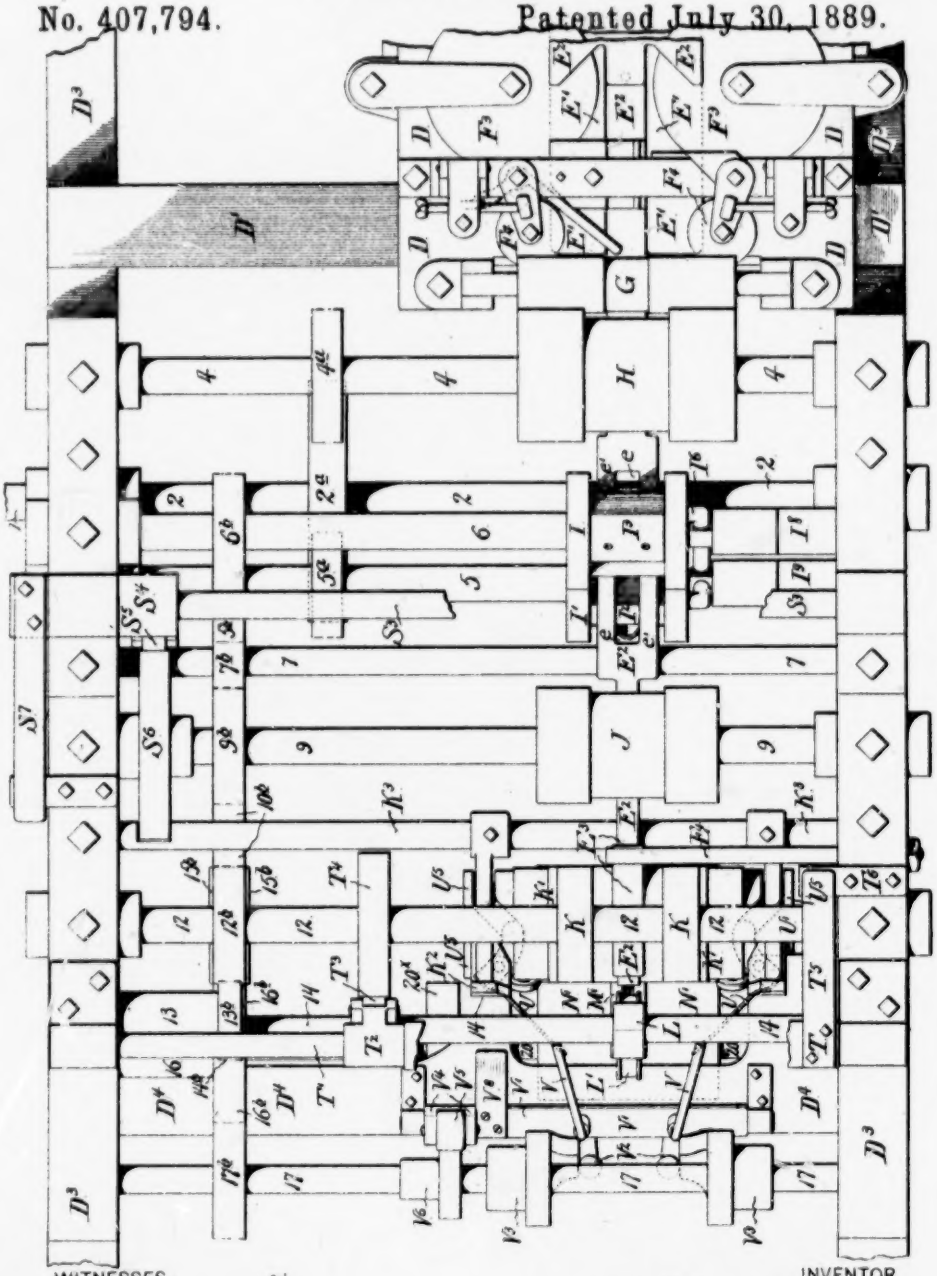

Fig. 18.

WITNESSES:
A. E. Paige
Jno. Wm. Cone.

INVENTOR
Charles B. Stilwell
by his attorney
Francis T. Chambers

(No Model.) 21 Sheets—Sheet 6.

C. B. STILWELL.

PAPER BAG MACHINERY.

No. 407,794. Patented July 30, 1889.

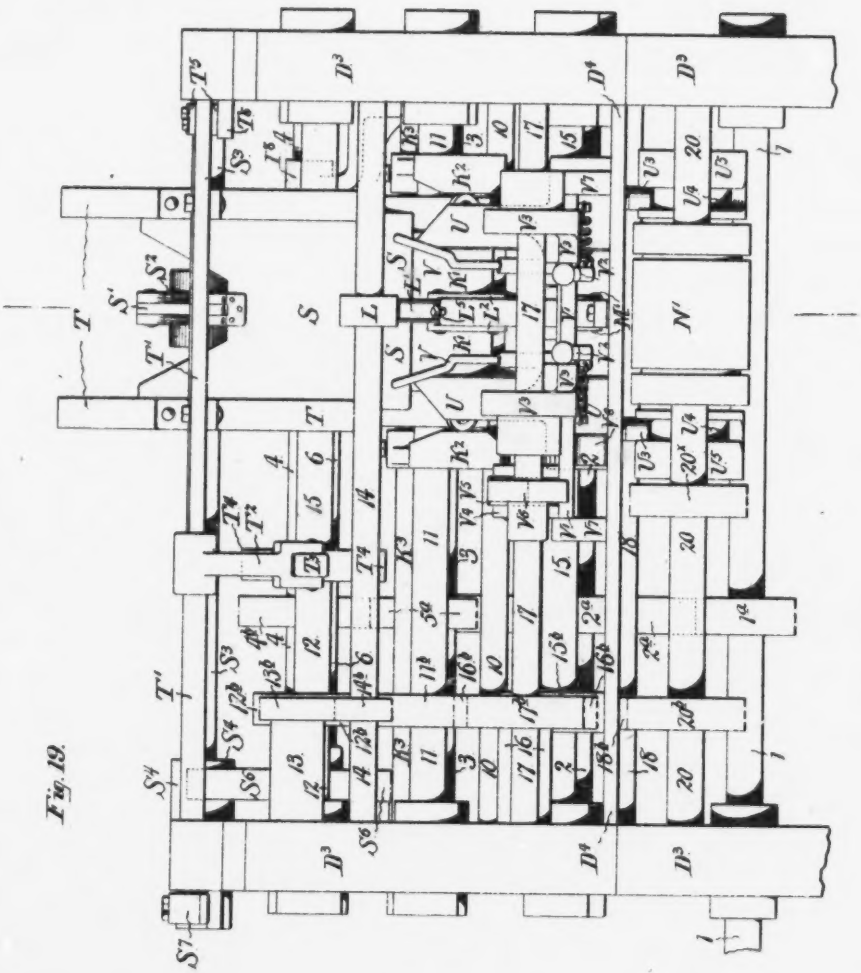

Fig. 19.

WITNESSES:
A. E. Paige
H. W. Van Pool

INVENTOR
Charles B. Stilwell
by his attorney
Francis T. Chambers

(No Model.) 21 Sheets—Sheet 7.

C. B. STILWELL.

PAPER BAG MACHINERY.

No. 407,794. Patented July 30, 1889.

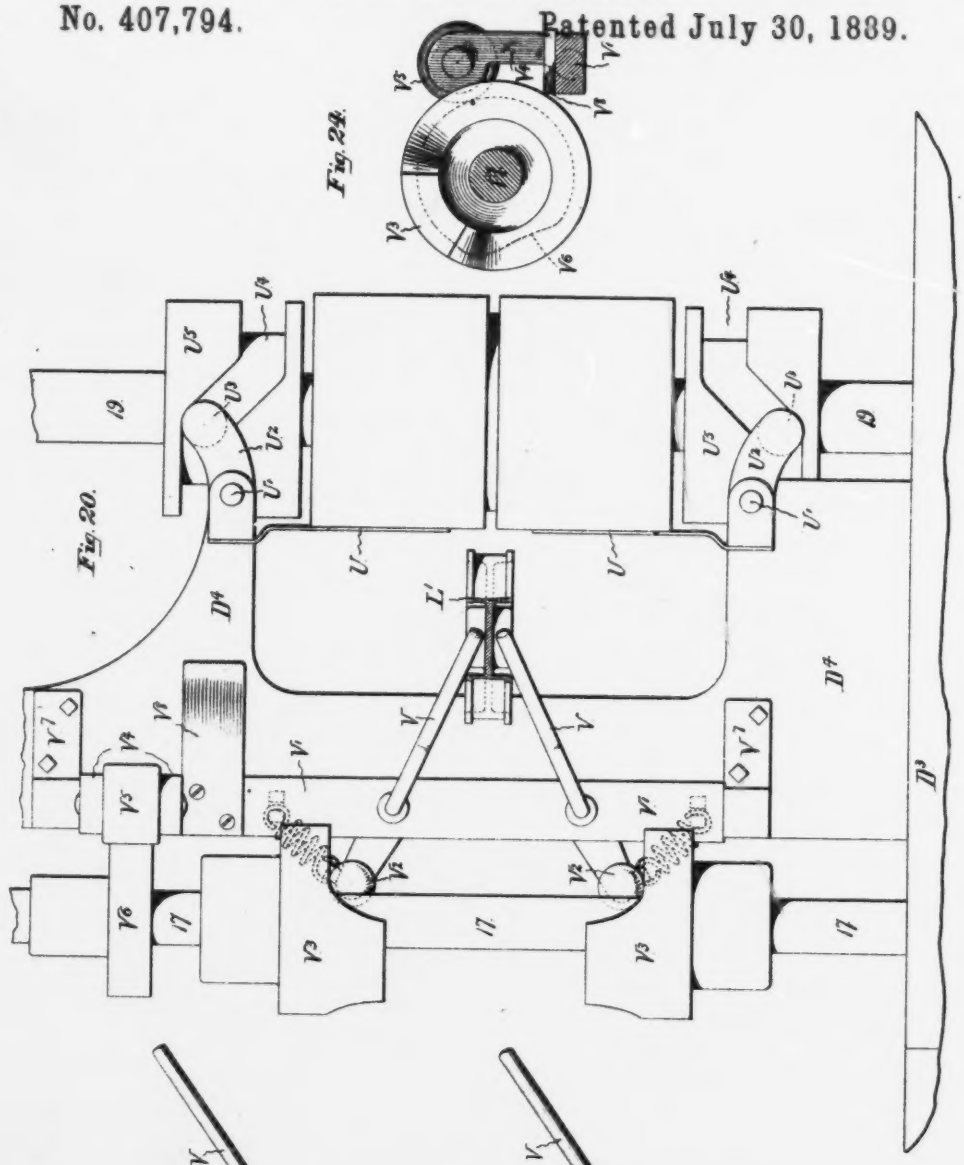

Fig. 24.

Fig. 20.

Fig. 22.

Fig. 23.

WITNESSES:
A. E. Paige
H. W. Hanpone

INVENTOR
Charles B. Stilwell
by his attorney
Francis T. Chambers

(No Model.) 21 Sheets—Sheet 8.

C. B. STILWELL.

PAPER BAG MACHINERY.

No. 407,794. Patented July 30, 1889.

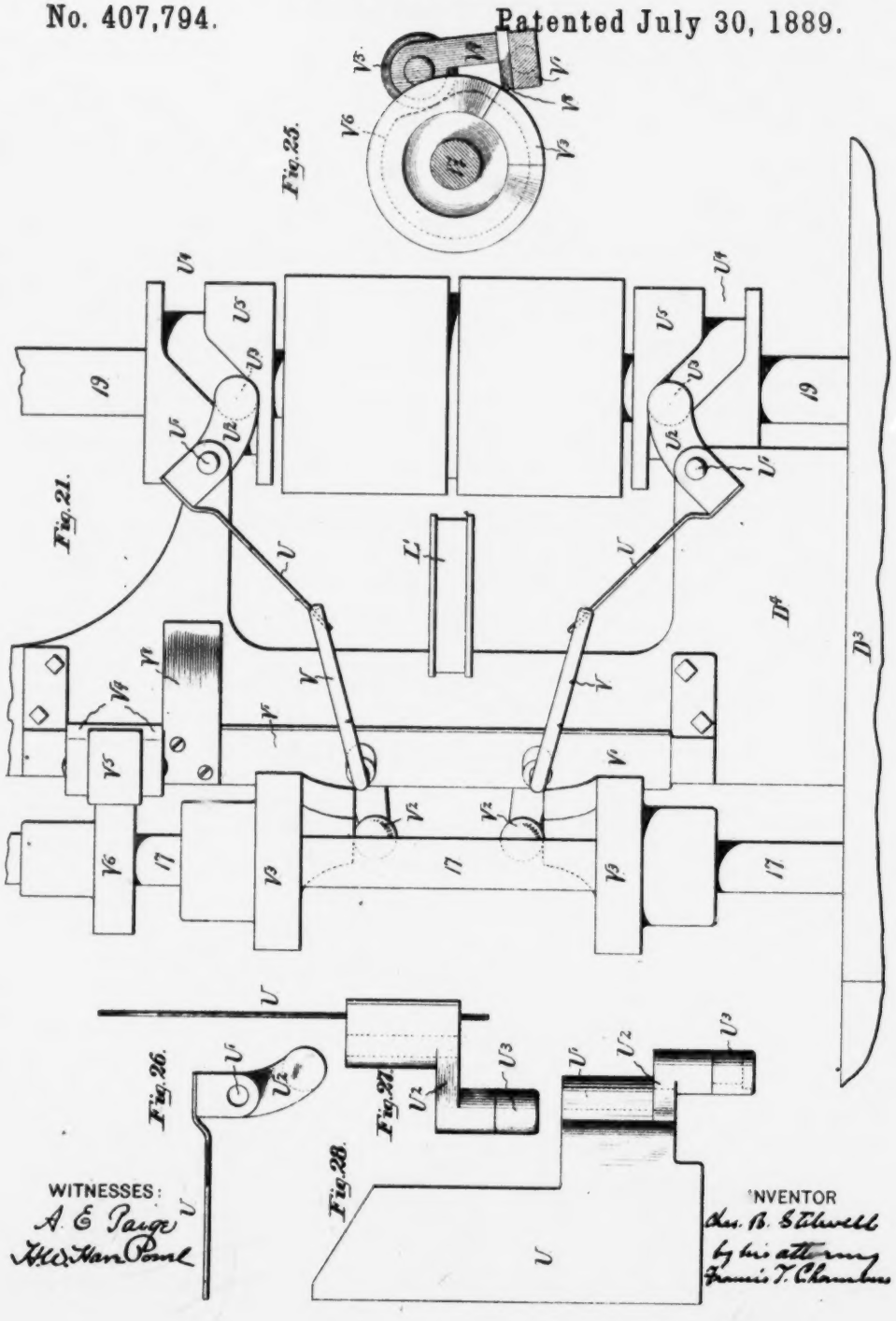

WITNESSES:
A. E. Paige
H. C. Van Pool

INVENTOR
Chas. B. Stilwell
by his attorney
Francis T. Chambers

(No Model.) 21 Sheets—Sheet 9.

C. B. STILWELL.

PAPER BAG MACHINERY.

No. 407,794. Patented July 30, 1889.

Fig. 29.

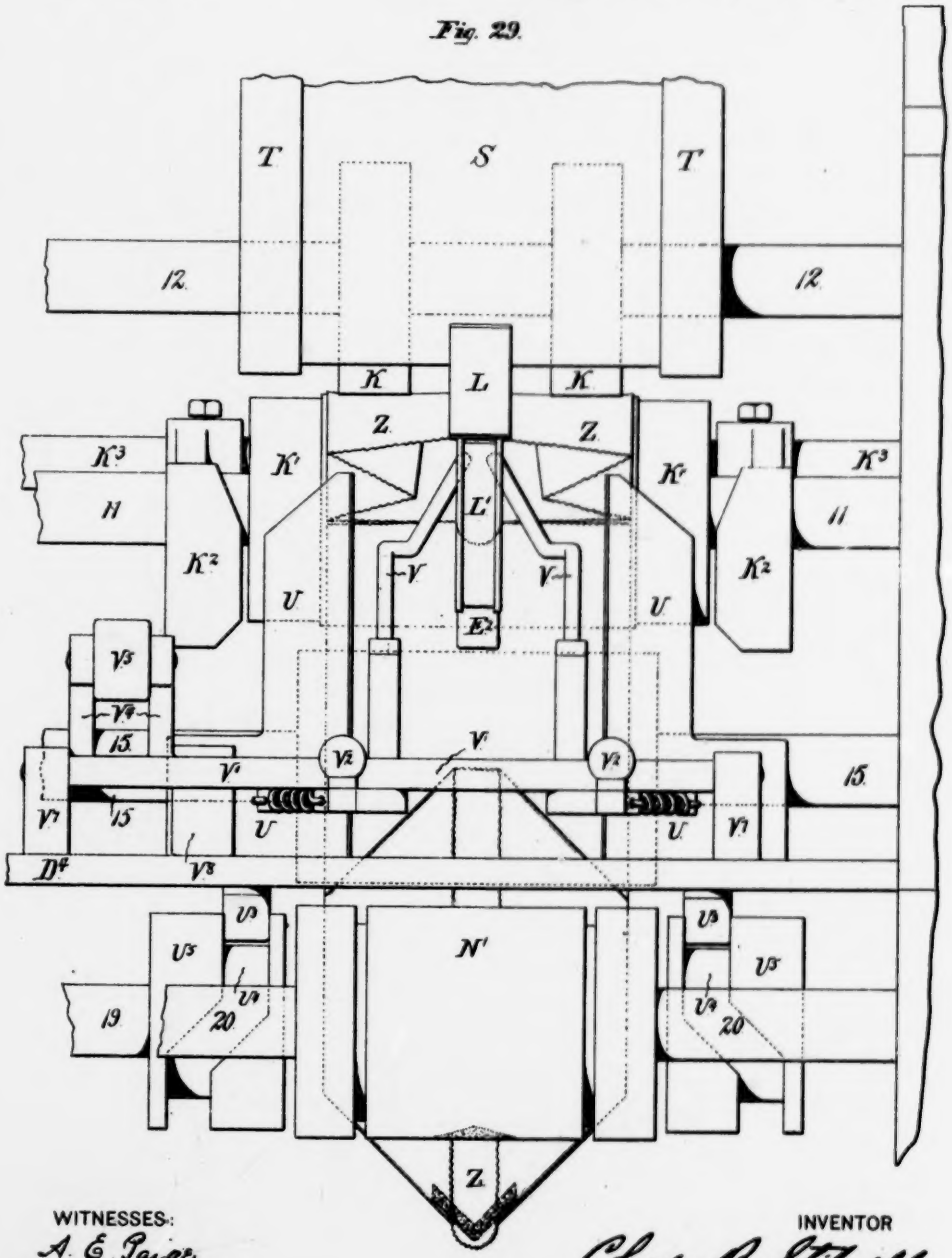

WITNESSES:
A. E. Paige
H. W. Hanbourne

INVENTOR
Charles B. Stilwell
by his attorney
Francis T. Chambers

(No Model.) 21 Sheets—Sheet 10.

C. B. STILWELL.

PAPER BAG MACHINERY.

No. 407,794. Patented July 30, 1889.

Fig. 30.

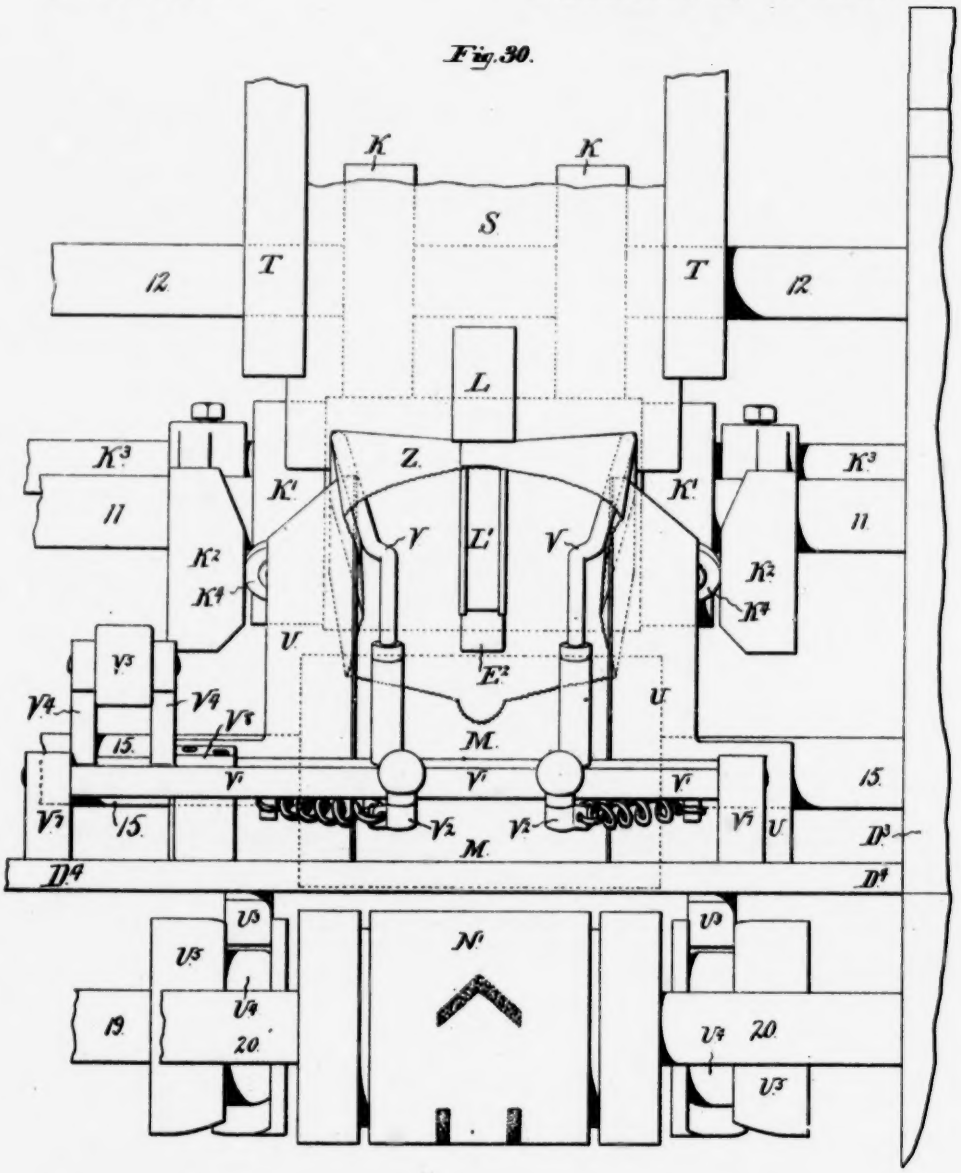

WITNESSES:
A. E. Paige
H. W. Hanpoul

INVENTOR
Charles B. Stilwell
by his attorney
Francis T. Chambers

(No Model.) 21 Sheets—Sheet 11.

C. B. STILWELL.

PAPER BAG MACHINERY.

No. 407,794. Patented July 30, 1889.

Fig. 31.

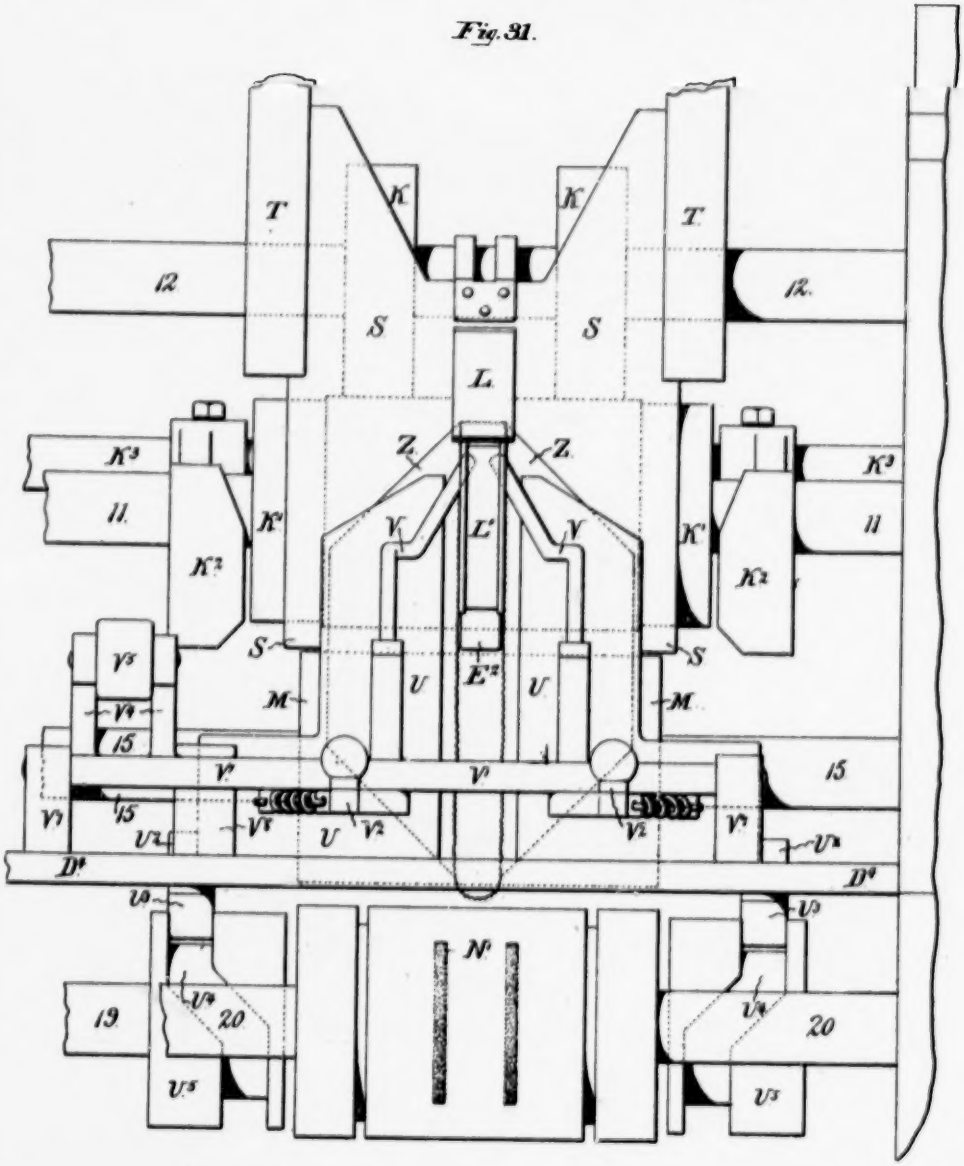

WITNESSES:
A. E. Paige
H. W. Van Pael

INVENTOR
Charles B. Stilwell
by his attorney
Francis T. Chambers

(No Model.) 21 Sheets—Sheet 12.

C. B. STILWELL.

PAPER BAG MACHINERY.

No. 407,794. Patented July 30, 1889.

Fig. 32.

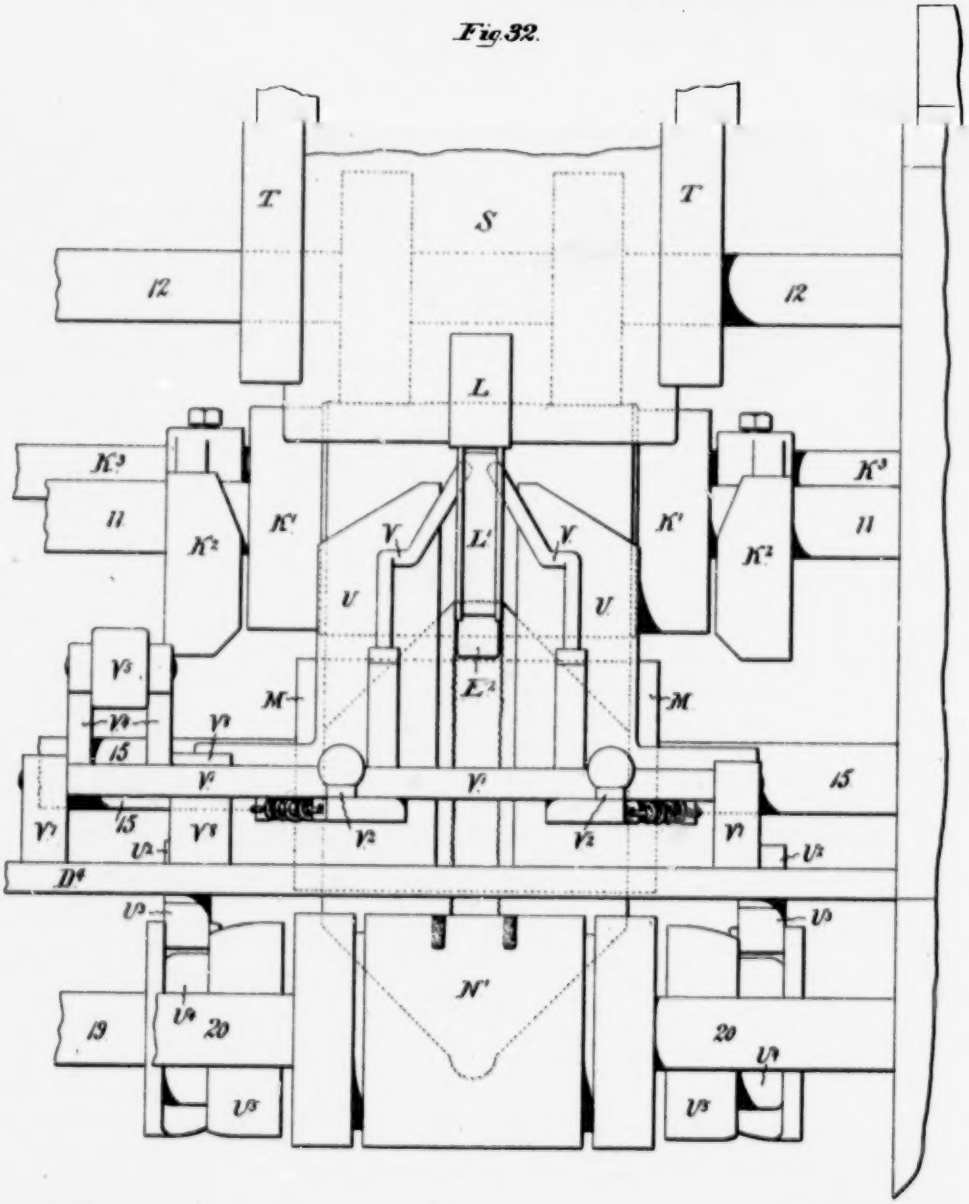

WITNESSES:
A. E. Paige
H. C. Hart Paine

INVENTOR
Charles B. Stilwell
by his attorney
Francis T. Chambers

(No Model.) 21 Sheets—Sheet 13.

C. B. STILWELL.

PAPER BAG MACHINERY.

No. 407,794. Patented July 30, 1889.

Fig. 33.

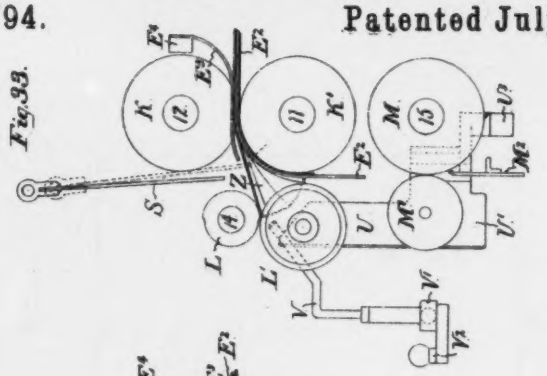

Fig. 34.

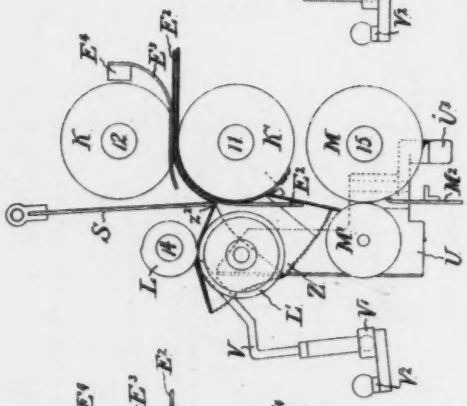

Fig. 35.

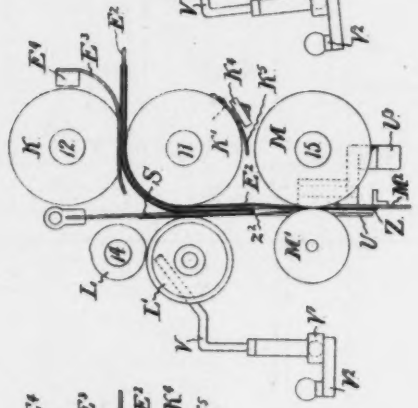

Fig. 36.

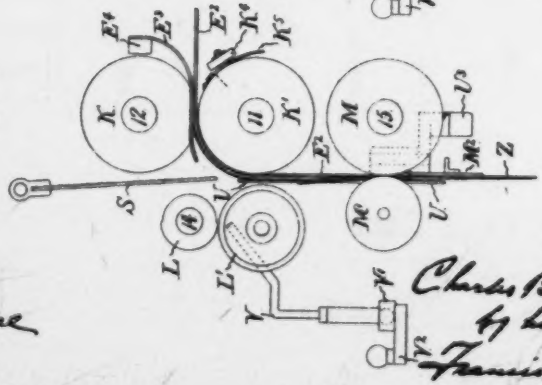

WITNESSES:
A. E. Paige
H. W. Han Pane

INVENTOR
Charles B. Stilwell
by his attorney
Francis T. Chambers

(No Model.) 21 Sheets—Sheet 14.

C. B. STILWELL.

PAPER BAG MACHINERY.

No. 407,794. Patented July 30, 1889.

Fig. 37.

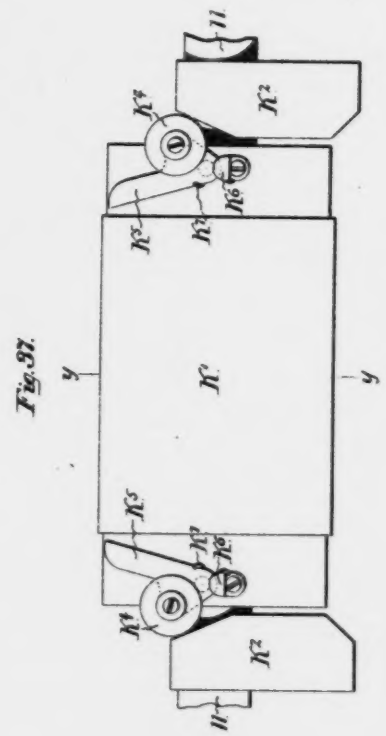

Fig. 39.

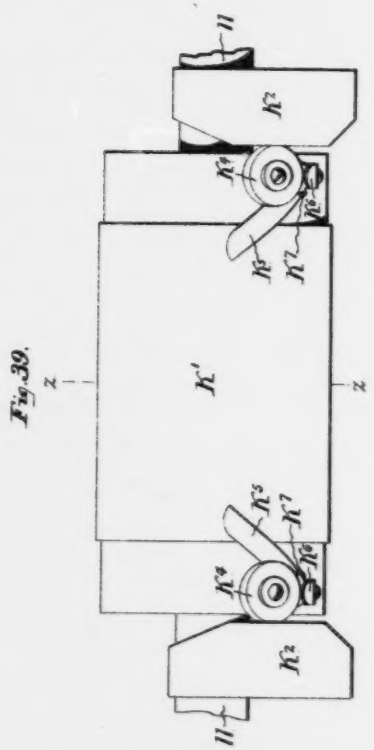

Fig. 38.

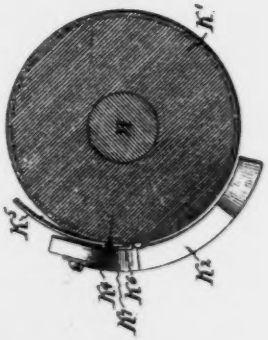

Fig. 40.

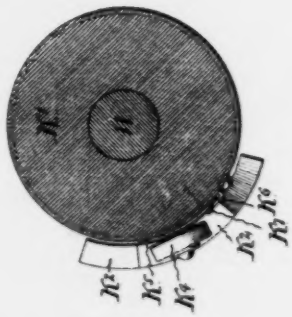

WITNESSES:
A. E. Paige
H. W. Hon Pond

INVENTOR
Charles B. Stilwell
by his attorney
Francis T. Chambers

(No Model.) 21 Sheets—Sheet 15.

C. B. STILWELL.

PAPER BAG MACHINERY.

No. 407,794. Patented July 30, 1889.

Fig. 43.

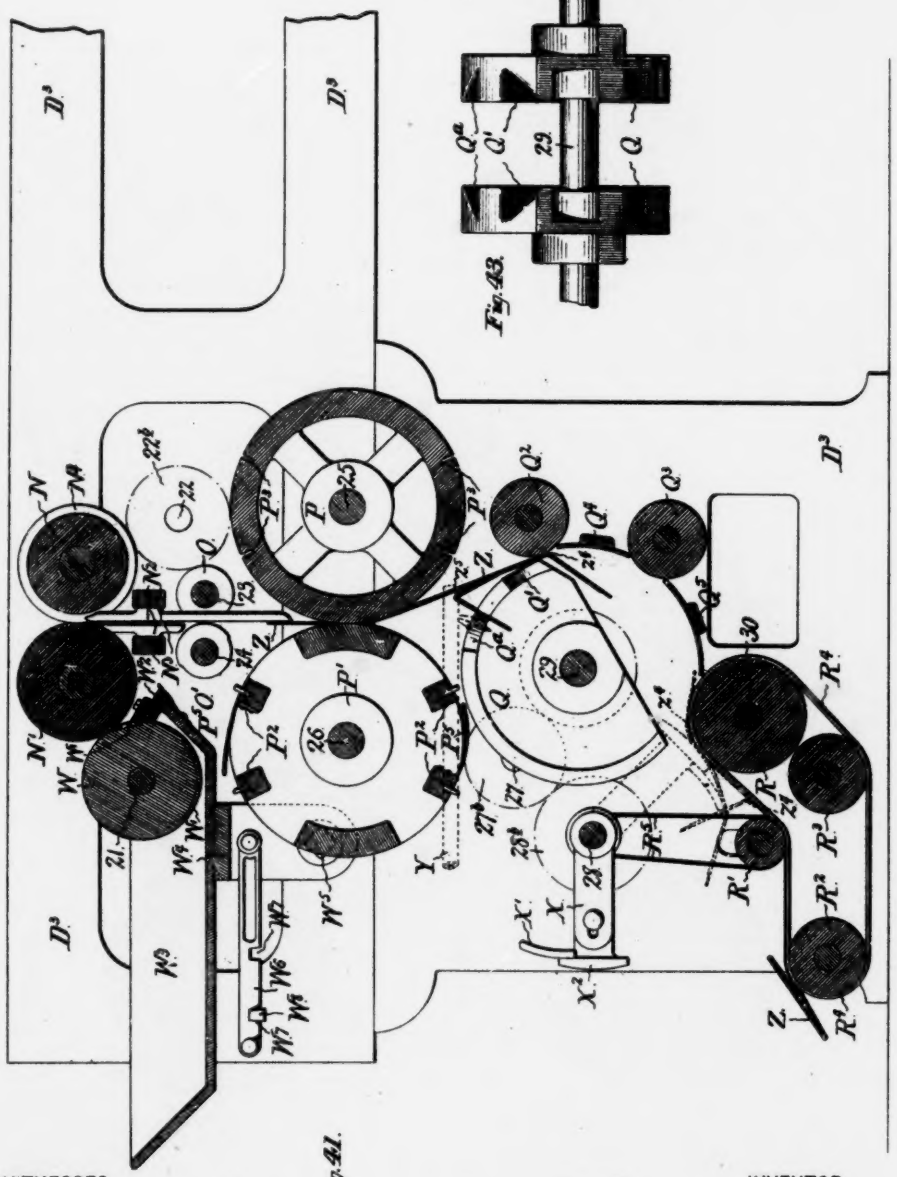

Fig. 41.

WITNESSES:
A. E. Paige
H. W. Hanpaul

INVENTOR
Charles B. Stilwell
by his attorney
Francis T. Chambers

(No Model.) 21 Sheets—Sheet 16.

C. B. STILWELL.

PAPER BAG MACHINERY.

No. 407,794. Patented July 30, 1889.

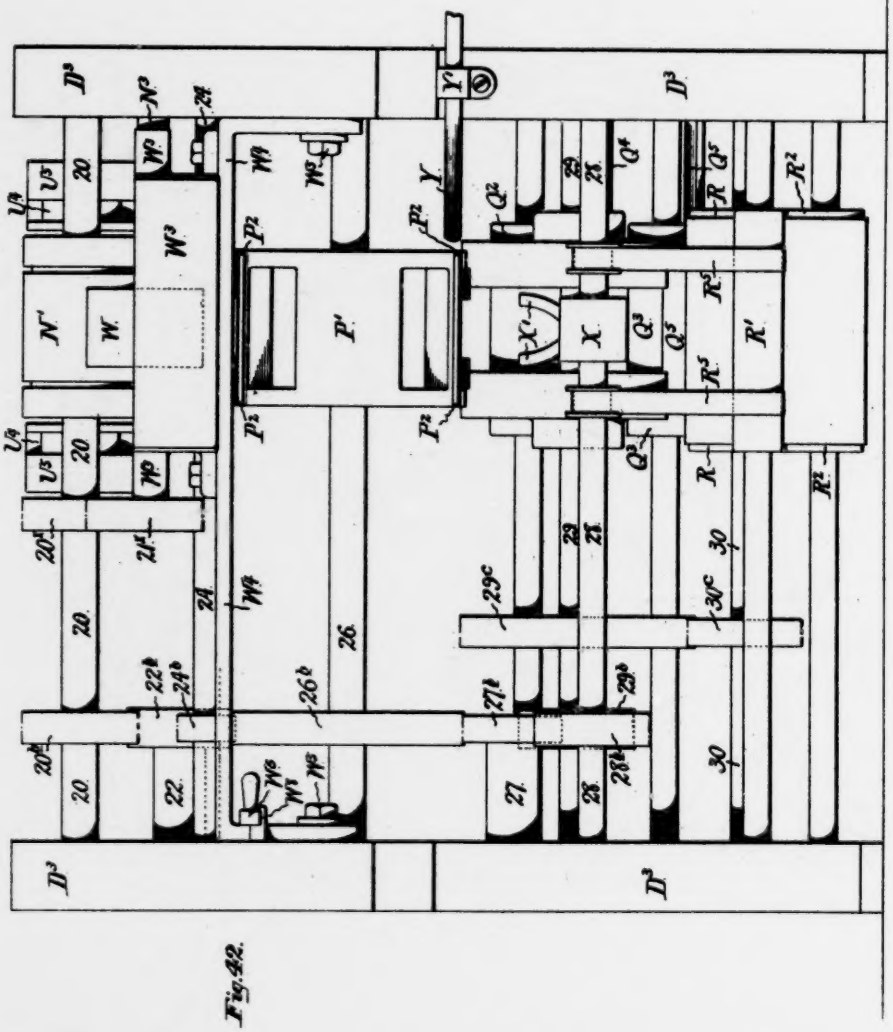

Fig. 42.

WITNESSES:
A. E. Paige
H. W. Hanpaul

INVENTOR
Charles B. Stilwell
by his attorney
Francis T. Chambers

(No Model.) 21 Sheets—Sheet 17.

C. B. STILWELL.

PAPER BAG MACHINERY.

No. 407,794. Patented July 30, 1889.

WITNESSES:
A. E. Paige
H. W. Hanchett

INVENTOR
Charles B. Stilwell
by his attorney
Francis T. Chambers

(No Model.) 21 Sheets—Sheet 18.

C. B. STILWELL.

PAPER BAG MACHINERY.

No. 407,794. Patented July 30, 1889.

Fig. 55.

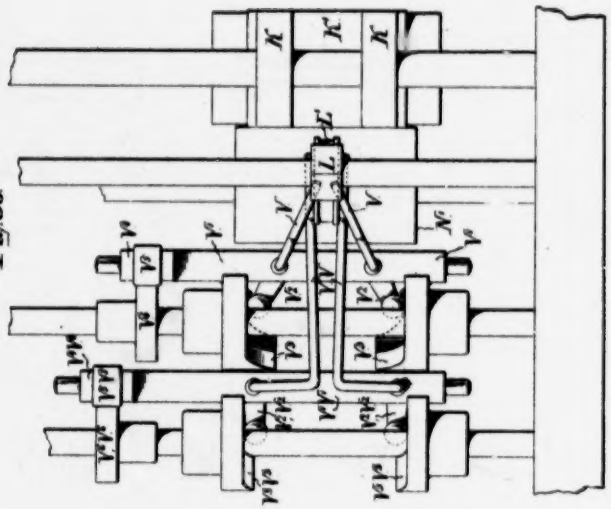

Fig. 56.

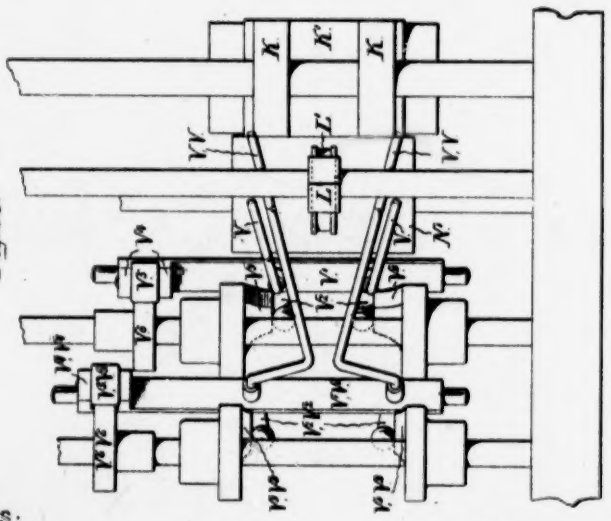

WITNESSES:

A. E. Paige

H. C. Van Pool

INVENTOR

Charles B. Stilwell

by his attorney

Francis T. Chambers

(No Model.) 21 Sheets—Sheet 19.

C. B. STILWELL.

PAPER BAG MACHINERY.

No. 407,794. Patented July 30, 1889.

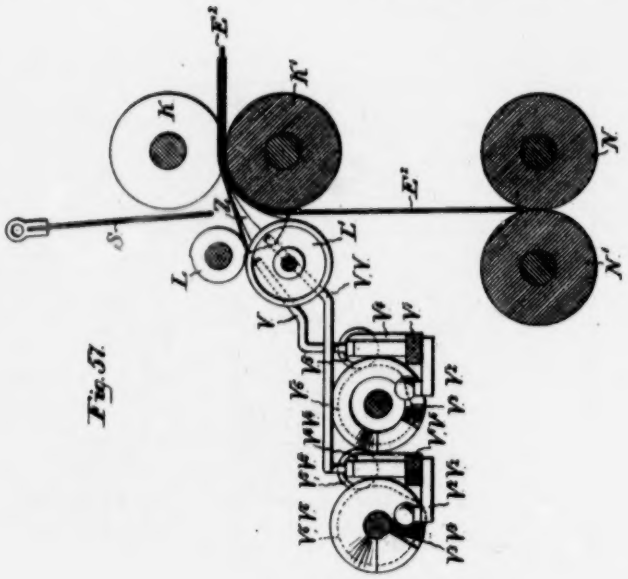

Fig. 57.

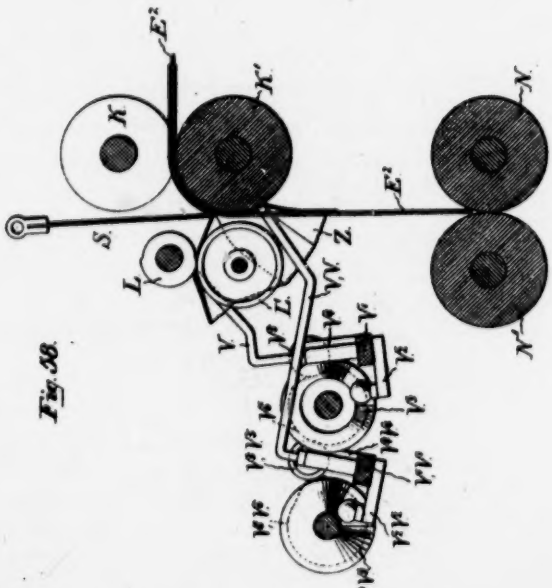

Fig. 58.

WITNESSES:

A. E. Paige

H. W. Van Poorl

INVENTOR

Charles B. Stilwell

by his attorney

Francis T. Chambers

(No Model.) 21 Sheets—Sheet 20.

C. B. STILWELL.

PAPER BAG MACHINERY.

No. 407,794. Patented July 30, 1889.

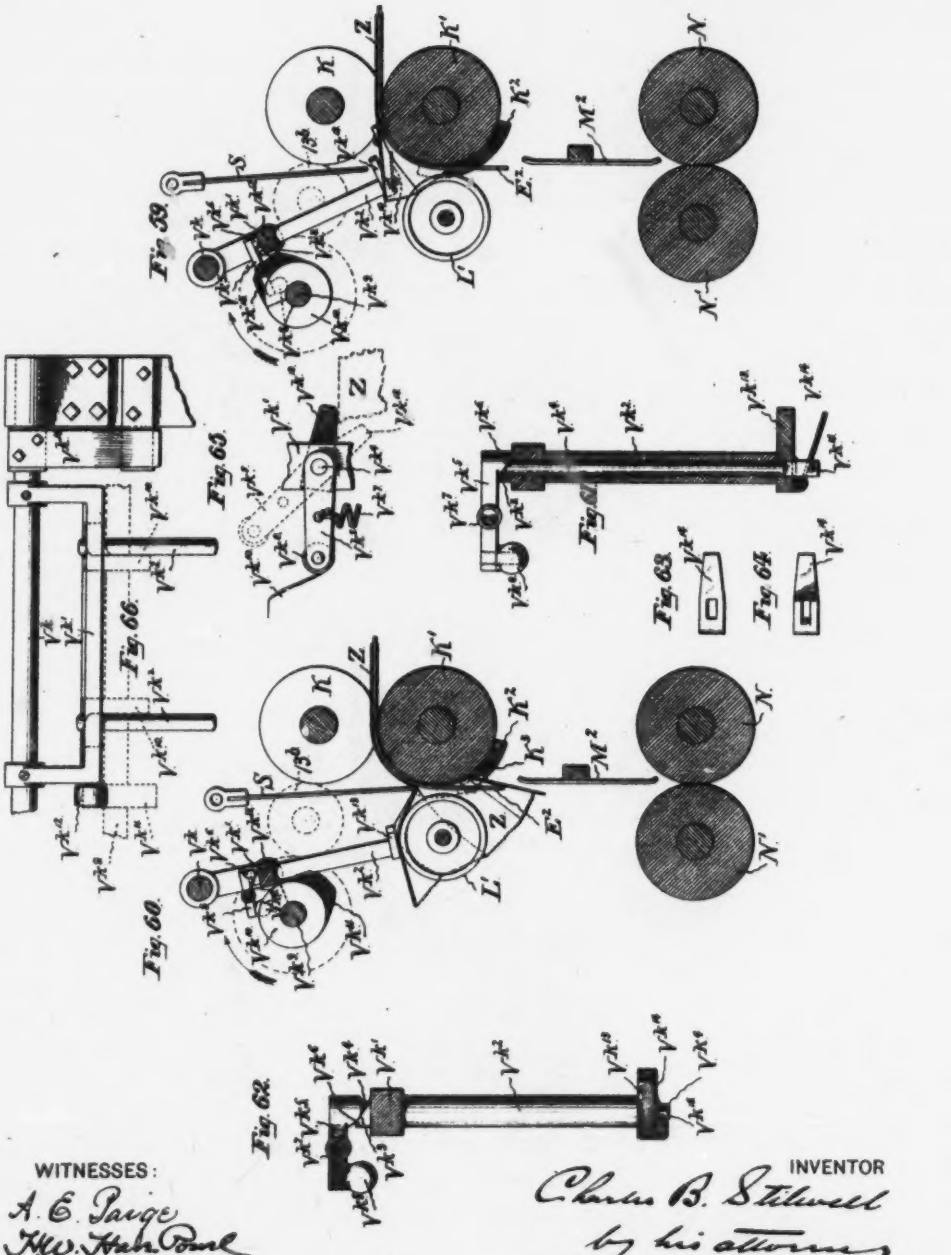

WITNESSES:
A. E. Paige
H. W. Hahn Pond

INVENTOR
Charles B. Stilwell
by his attorney
Francis T. Chambers

(No Model.)

21 Sheets—Sheet 21.

C. B. STILWELL.

PAPER BAG MACHINERY.

No. 407,794. Patented July 30, 1889.

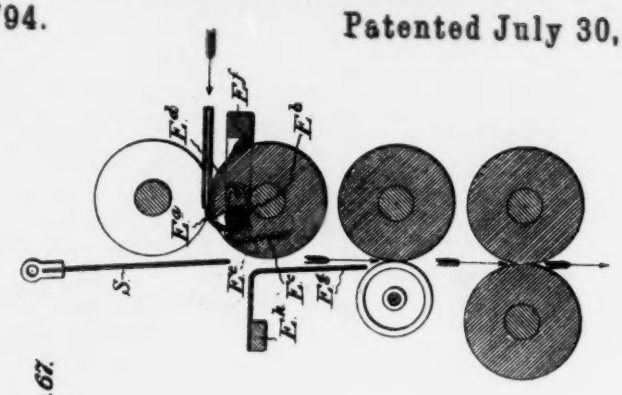

Fig. 67.

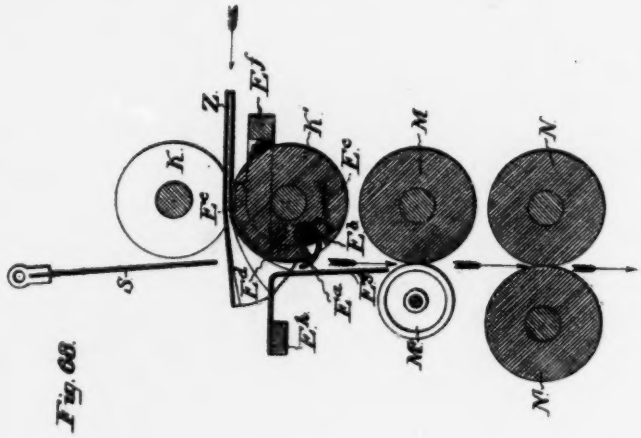

Fig. 68.

WITNESSES:
A. E. Paige
H. W. Van Pool

INVENTOR
Charles B. Stilwell
by his attorney
Francis T. Chambers

UNITED STATES PATENT OFFICE.

CHARLES B. STILWELL, OF PHILADELPHIA, PENNSYLVANIA, ASSIGNOR TO THE UNION PAPER BAG MACHINE COMPANY, OF SAME PLACE.

PAPER-BAG MACHINERY.

SPECIFICATION forming part of Letters Patent No. 407,794, dated July 30, 1889.

Application filed March 21, 1888. Serial No. 267,965. (No model.)

To all whom it may concern:

Be it known that I, CHARLES B. STILWELL, a resident of the city and county of Philadelphia, State of Pennsylvania, have invented a new and useful Improvement in Paper-Bag Machinery, of which the following is a true and exact description, reference being had to the accompanying drawings, which form a part of this specification.

My invention relates to the construction of machinery adapted to make paper bags of the peculiar formation shown in the reissued Letters Patent No. 10,083, granted the Union Paper Bag Machine Company, April 11, 1882, as the assignee of Mark L. Deering; and the object of my invention is to provide means and appliances whereby such bags can be rapidly and economically manufactured.

Bags of the above kind when opened for use do not differ from the well-known satchel-bottom bag made from a plain tube of paper, and, as in the old satchel-bottom bags, the first step in the formation of their bottoms is to open and spread out one end of the tube, thus forming what in the manufacture of the old satchel-bottom bags is called the "diamond," which term is also applicable to the opened and flattened end of the tube as formed in the process of making the new bag, although in the latter case the two lateral corners of the diamond figure which forms part of the sides of the bag when distended are folded inward, so that they lie upon the true bottom of the bag instead of extending out from said bottom, as in the old bag, and the figure of the opened end of the blank is therefore not a true diamond, but a diamond with its lateral edges truncated. In both the old and new bags the final folds which complete the bag ready for market are made by folding the front and back corners of the diamond down upon each other and upon the inwardly-folded flaps of the diamond.

My present invention relates, principally, to the means whereby the end of a bellows-folded tube is opened and spread out into the truncated diamond form to which I have referred. Its features and details will be better understood after an examination of the drawings, which represent a paper-bag machine embodying my invention.

Figures 1 to 14 represent the various folds made in the blank in the process of making the bag. Fig. 15 is a side view, partly in section, of the mechanism by which a roll of paper is converted into a bellows-folded tube; Fig. 16, a plan view of the same mechanism shown in Fig. 15. Fig. 17 is an elevation, partly in section, showing the mechanism by means of which the tube after being formed is first cut into blanks of the desired form and then opened up at one end into the diamond or truncated diamond form before referred to. Fig. 18 is a plan view of the same mechanism shown in Fig. 17. Fig. 19 is a front view of that part of the machine shown in Figs. 17 and 18. Fig. 20 is an enlarged plan view of the distending rods or fingers which I use in opening out the end of the tube, the folder-plates which I use to compress the diamond and hold it in shape after it has been formed, and the mechanism by which these fingers and plates are actuated. Fig. 21, Sheet 8, is a view of the same portions of the machine, showing them, however, in a different position from that occupied in Fig. 20. Fig. 22 is a side view of one of the distending-fingers and its immediate connections; Fig. 23, a similar view showing a modification in the way in which the finger is attached. Fig. 24, Sheet 7, and Fig. 25, Sheet 8, are side views of the cams by which the distending-fingers are actuated. Figs. 26, 27, and 28 are respectively top, edge, and front views of the side folder-plates. Fig. 29 is an enlarged front view of those portions of the machine which operate to open and distend the bottom of the blank in the diamond form, the mechanism being here shown as in the position it occupies just before the distending-fingers are actuated. Fig. 30 is a similar view showing the mechanism in the position it occupies when the distending-fingers have performed their function in opening up the bottom of the tube. Fig. 31 shows the same parts of the machine in the position they occupy when the vertically-moving folder-plate has performed its function and the diamond is practically brought to form. Fig. 32 again represents the same portions of the machine at the stage of their operation when the side folder-plates are in operation to press and hold the diamond in shape. Fig. 33 is a

side view of the upper part of the mechanism shown in Fig. 29 in the position it there occupies; Fig. 34, a similar view showing the position of the mechanism as in Fig. 30; Fig. 35, a similar view showing the mechanism in the position it occupies in Fig. 31, and Fig. 36 shows the parts as they are in Fig. 32. Fig. 37 is an enlarged front view of the roller K′, which performs an important part in the opening of the diamond, this view showing the gripping-fingers, which are attached to and operate upon this roller, and the cams which operate them, in their open position. Fig. 38 is an end view on the line *y*-*y* of Fig. 37. Fig. 39 is a view similar to Fig. 37, showing the action of the cams on the gripping-fingers, which are here shown in the position they occupy when gripping the paper upon the roller K′; and Fig. 40 is an end view on a section *z z* of Fig. 39. Fig. 41 is a sectional elevation of the mechanism by which I fold down the two final flaps to form the bottom of the bag; Fig. 42, a front view of this part of the machine; Fig. 43, a back view of the roller Q of Fig. 41. Figs. 44 to 47, inclusive, are views of a modification of the distending-fingers heretofore referred to; Figs. 48 to 52, inclusive, views of still another modification of this part of the machine; Figs. 53 and 54, views showing this last modification in connection with a bag-blank and the rollers K K′. Figs. 55 and 56 are plan views, a modification in which two coacting pairs of distending-fingers are used to open the bag-blank; Figs. 57 and 58, side views of the modified device shown in Figs. 55 and 56. Figs. 59 and 60 are side views of another modification of my improved bag-machine; Figs. 61 to 66, details of the mechanism shown in Figs. 59 and 60; and Figs. 67 and 68 are side views illustrating still another modification which may be made in my machine.

Referring first to Figs. 15 and 16, A is the roll of paper from which the bellows-folded tube is to be made, A′ representing the paper as it leaves the roll and passes to and over the formers which make it into a tube.

A^2 are cones which sustain the roll A and keep it in position; A^3, guides which center the roll A, and A^4 the pivoted supports for the guides A^3.

B and C are guide-rollers for directing the paper; C′, a paste-wheel for applying a line of paste to one edge of the paper as it passes over the guide-roll C, C^2 being the paste-box, C^3 the table which supports said box, and C^4 a rock-shaft by which the paste-box and roller are held in correct position with respect to the guide-rollers C.

D is a table which supports the devices by which the web A′ is formed into a bellows-folded tube; D′, braces supporting D^2 and D; D^3, brackets on which the table D is supported on the braces D′, and D^5 and D^4 the main frame of the machine.

E is the support to which are secured the former-plates E′ E^2, the said support E being made adjustable, as shown, by means of slots and bolts.

F F are adjustable upright guides which fold the web A′ around the edges of the former E′.

F′ are guide-disks which direct the sides of the blank between the formers E′ and E^2.

F^2 are fingers for directing the upper edges of the web A′ into proper position above the former F^3.

F^3 F^3 are rotating guide-disks operating between the formers E′ and E^2, as shown.

F^4 F^4, Fig. 18, are additional guide-disks which I prefer to use.

G G′ are pressure-rolls which act, together with the prolonged former E^2, to compress the bellows-folded tube after it has been formed by the above-described mechanism.

Passing next to Figs. 17 and 18, which will at once be seen to show those portions of the machine which lie in front or beyond the tube-former proper, H H′ are feed-rollers journaled on the shafts 4 and 3.

I I′ are feed-rollers carrying knives I^2 I^2, which operate on the center of the tube, and are arranged to cut a lip at the center, as is quite customary in making blanks. The particular construction of these knives, as indicated in the drawings, need not be here explained, as it will form the subject of another application for a patent, and, so far as the present invention is concerned, they could be replaced by any of the well-known cutters for doing similar work. I wish, however, to call attention to the fact that these cutters operate in connection with an opening *e* in the prolonged former E^2, said former being broadened out, as shown at *e*′, so that its perforation may have the requisite breadth here slightly greater than the breadth of the plate itself in this part of the machine.

J J′ are feed-rollers provided with knives J^2 and slots J^3, said knives and slots acting on each side of E^2 to completely sever the tube into blanks of the desired length, the knives I^2 I^2 having previously severed the tube at its center.

K K′ are the feed-rollers which deliver the blanks to the mechanism which opens and spreads out their bottoms, and of which mechanism the roller K′ is in my preferred construction an important constituent. The roller K′ has a plain cylindrical face, as shown, while the roller K is made up of two disks and does not touch the roller K′ at the center.

With the exception of some novel functions performed by the roller K′, the mechanism of the machine up to this point has no essential relevancy to my present invention, and might be replaced by any of the many well-known forms of mechanism by which a web of paper is formed into a bellows-folded tube and such tube cut up into bag-blanks of the required size and form.

It will be noticed that the former E^2 is continued throughout the whole length of the

mechanism heretofore described, and by reference to Fig. 17 and the other drawings showing this part of the machine it will be seen that the end of the former passes over the top of the roller K′ and, conforming closely to its outline, curves downward. Over the top of the former, where it passes over the roller K′, is a guide E^3, fastened to the support E^4.

To refer next to the immediate connections of the roller K′, K^2 K^2 are stationary cams at each end of said roller, said cams being supported on the axis 11 and held stationary by the supports K^3. (Best seen in Fig. 17.)

K^5 K^5 (see Figs. 37 to 40) are gripping-fingers pivoted in line with each other on the outer edge of the roller K′, K^6 K^6 being clamping-plates for holding the fingers in position; K^4 K^4, rollers attached to the fingers in such a way as to rest against the cam-surfaces of K^2, and K^7 K^7 are springs which act to hold the rollers K^4 against the cam-surfaces K^2.

The action of the cams K^2 in connection with the fingers K^5 is clearly shown in Figs. 37 to 40, inclusive.

L L′ are feed-rollers, of which L is secured to and turns with the shaft 14, while L′ (see Fig. 17) is supported on the end of a lever L^2, pivoted at L^3 and pressed upward by means of a spring L^4, the upward motion of the lever L^2 and the roller L′, which it supports, being limited and regulated by a set-screw L^5.

It will be noticed that a portion (about one-half, as shown in the drawings) of the surface of the upper roller L is cut away, so as to be lower than the remaining one-half of the surface. In this way, by a proper adjustment of the set-screw L^5, the rollers L L′ are made to alternately tightly grip the paper between them and release their grip upon it. The release, of course, need not be entire. In fact, it is desirable that there should always be some pressure between the two rollers.

M and M′ are feed-rollers, M being secured on the shaft 15, and M′ turning by frictional contact. The roll M has a broad plain face of greater width than the bag-blank, while the roll M′ is narrow and rests upon the center of the plain surface of roll M.

M^2 is a flat plate arranged so that its surface will be substantially in line with a vertical tangent to the surface of roll M.

N N′ are rollers which serve at the same time to apply paste to the diamond after it has been formed and feed it forward to the mechanism which makes the final folds.

To return, however, to those parts of mechanism by which the diamond is formed during the progress of the blank from between the rolls K K′ until it is engaged by the rolls N N′. V V (best shown in Figs. 22 and 23) are distending rods or fingers, the shanks of which pass through an oscillating bar or rock-shaft V′, in which they are free to turn.

V^2 are rollers attached to arms springing from the base of the fingers V.

V^3 V^3 are cams secured on a rotating shaft 17, so as to rest against the rollers V^2 and, through said rollers, cause the fingers V to turn in their bearings on the rock-shaft V′ from the position shown in Fig. 20 to the position shown in Fig. 21.

V^4 is an arm attached to and projecting upward from the rock-shaft V′; V^5, a roller journaled in the arm V^4.

V^6 is a cam on shaft 17, against which the roller V^5 rests, and by which the rock-shaft V′ is caused to oscillate at proper times.

V^7 V^7 are the bearings of the rock-shaft V′.

V^8 is a spring which acts to keep the roller V^5 in contact with the cam V^6.

S is a folder-plate or tucker; S′, a link connecting the upper edge of the tucker S with the lever-arm S^3, which is secured to the rock-shaft S^2.

S^4 is an arm, also secured to rock-shaft S^2 and carrying at its lower end a roller S^5, which rests against a cam S^6, on shaft 9, said cam acting through the roller-arm S^4, shaft S^2, arm S^3, and link S′, serving to raise and lower the tucker S at proper times.

T T are guides for the tucker S. They are attached to a rock-shaft T′, from which extends an arm T^2, carrying at its end a roller T^3. This roller rests against the cam T^4 on the shaft 12, and said cam regulates the angular position of the guides T and the tucker S, which they support.

U U are folding wings or plates, the form and construction of which are best seen in Figs. 26 to 27. They are supported on that part of the frame-work of the machine marked D^4, on journal-pins which pass through the holes U′. (See Fig. 21.) U^2 are roller-arms attached to these folding-wings, and U^3 rollers journaled on the arms U^2. These rollers are inserted in the cam-groove U^4 of cams U^5, and said cams are secured on the rotating shaft 19.

Before explaining the action of the above-described parts in opening the bottom of the blank I will point out the gearing by which, in the machine shown in the drawings, the different operative devices are actuated.

1 is the driving-shaft; 1^a, a gear-wheel secured to this shaft and meshing with an intermediate wheel 2^a on shaft 2. This wheel engages with a wheel on shaft 3, which is of the same size and lies directly under the wheel 4^a on shaft 4, with which wheel it engages to drive the shaft 4, the feed-rolls H H′ being thus actuated with equal velocity. 2^a also engages with the wheel 5^a on shaft 5, a second wheel 5^b on this shaft engaging a wheel 6^b on shaft 6 to rotate the cutter-rolls J J′. The wheel 5^b engages intermediate wheel 7^a on shaft 7, and this wheel engages with a gear-wheel on shaft 8 of the same dimensions and directly under the wheel marked 9^b on shaft 9, said wheel 9^b being driven by the corresponding gear on shaft 8, and the cutter-rollers J J′ are thus driven with uniform velocity. The gear-wheel on shaft 8 engages with the wheel

10^b on the intermediate shaft 10, and this gear-wheel 10^b actuates the roller K′ by engaging with a wheel on shaft 11, said wheel having the same dimensions and lying directly under 12^b on shaft 12, 12^b being driven by the wheel on shaft 11, so that the rollers K and K′ have the same velocity. The gear-wheel 12^b engages with the intermediate wheel 13^b on shaft 13, and 13^b engages a wheel 14^b on shaft 14, so as to drive the roller L. The intermediate gear 10^b also engages a gear-wheel 15^b on shaft 15 and drives the roller M, said wheel 15^b also meshing with an intermediate gear 16^b on shaft 16, which in turn engages the gear 17^b on shaft 17 and actuates said shaft and the cams situated upon it. The gear 15^b engages an intermediate gear 18^b on shaft 18, said gear-wheel engaging with a gear on shaft 19 of the same dimensions as 15^b, and the gear on shaft 19 meshing with a similar gear-wheel on the shaft 20.

I prefer to make the train of gears which actuate the mechanism in front of the rollers H H′ operate to move the rollers in front of H H′ slightly faster than they move, so as to put a slight tension on the paper between H H′ and J J′. The surface velocities of the rollers I I′, J J′, K K′, L, M M′, and N N′ are substantially the same, though I have found it advantageous to make the velocity of the surface of the roller L slightly greater than that of the rest of the train, so as to put some little tension on the bag-blank at that point. The shaft 17 must move with the same angular velocity as the shaft 11, carrying the roller K′.

The system of gearing to which I have above referred can of course be varied in many ways, and of course so long as the proper sequence of motion is preserved between the various operative parts it is entirely immaterial how they are geared and connected together to have this sequence.

I have already pointed out how the tube is prepared and cut into blanks, and, as the drawings show, as soon as the blanks are completely separated from each other they pass between the rollers K K′. As they pass from between these rollers, the extension of the former K^2, which lies within the blank, bends down the lower or under side of the blank, while the upper side is guided by the plate E^2 between the rollers L L′, as is shown in Figs. 29 and 33. The upper side of the paper is then gripped between the rolls L L′ and drawn forward by them. The gripping-fingers K^3 K^3, pivoted on the roller K′, are so arranged with relation to the stationary cams K^4 K^4 that they will move inward and clamp the edges of the bottom of the blank to the rolls at the points where the corners of the bottom of the bag are to be formed, and the distending-fingers V, which, as the upper side of the blank passes between the rollers L L′, lie in the position shown in Figs. 29 and 33, are so arranged with relation to the cams V^3 V^3 and the cam V^4 that they will open and rock backward into the position shown in Figs. 30 and 34 when the blank has been fed forward sufficiently to make the points of the fingers V engage the corners of the blank at or a little back of the points where the corners of the bottom are to be formed in the upper fold of the blank. At the point in the movement of the machine indicated in Figs. 30 and 34 the bottom of the bag is thus defined: its corners on the lower side of the blank being defined by the line on which the fingers K^3 K^3 catch it, and its corners on the upper side of the blank defined by the points where the fingers V V rest on the inside of the blank.

By giving the distending-fingers the double motion described I am enabled to engage the corners of the blanks with greater uniformity and precision, the motion backward, or, more accurately, in the direction of the motion of the blank, insuring that the engagement of the fingers with the tube shall not be too close to the end of the blank at the time when said blank is being distended.

I will also note here that it is not essential that the fingers K^3 should actually clamp the paper against the roll K′. Indeed, the said fingers will fully serve their purpose if they merely define the corners x^4 x^4 by lying on the under side of the tube at these points without pressure, for the fingers V V, in connection with the curved end of plate E^2, will practically effect the distention of the tube, though without some means of defining the corners x^4 x^4 they could not be depended on to bring said corners into the same transverse plane with corners x^3 x^3. While, therefore, I shall hereinafter refer to K^3 K^3 as "gripping-fingers," it must not be understood that I mean thereby to limit myself to fingers which clamp the paper against the roll K′.

The tucker S is actuated so that it will move down and engage the top of the blank issuing from rolls K K′ on the line x^3, where the upper side of the blank is folded back on itself in the completed bag. Between its positions, as shown in Figs. 33 and 34, the tucker S, as the blank advances, moves down, engaging the blank first in about the position shown in dotted lines in Fig. 33, and then being so guided that its edge will practically follow the conformation of roller K′ and move with the same speed. The effect of this is that when the blank is in the position shown in Fig. 34 its front upper side is just changing its forward for a backward motion between rolls L L′, and is virtually standing still at the time when the distending-fingers operate to distend the tube, and the position of the tucker is such as to prevent the distention of the tube from extending too far back and to cause the folds to fall naturally into the desired lines. At this point the recessed portion of the roller L comes above the roller L′, and said rollers therefore release the tight grasp which they have heretofore had upon the upper side of the blank, and the tucker S, moving downward from the po-

sition shown in Figs. 30 and 34 to that shown in Figs. 31 and 35, draws the upper side of the blank from between the rollers L L', the roller L' of course being narrower than the distance between the side folds z' z' of the diamond, as shown in Fig. 4. As shown in Figs. 34 and 35, the end of the lower side of the blank is seized between the feed-rollers M M' and drawn forward while and after the tucker S is moving from the position shown in 34 to that shown in 35, the roller M', like the roller L', being narrower than the distance between the side folds of the diamond. The spreading-fingers V V close or begin to close immediately after the mechanism is in the position shown in Figs. 34 and 30. Their closure may be so arranged that their points will follow the two converging lines of the upper fold of the diamond and help to bring these lines into shape, although this action is not essential. The fingers K^3 K^3 on roller K' also move back from their position over the edges of the under side of the blank as the machinery advances from the position shown in Fig. 34, the diamond being completed by the coaction of the roller L', tucker S, and rolls M M', which, the paper having been drawn into the position shown at Z in Figs. 30 and 34, pull it in such a way as to cause it to naturally fall into the desired diamond shape. Before the tucker S has completed its downward motion the side folders or wings U, which during the first part of the operation of spreading open the bottom have remained in the position shown in Figs. 30 and 33, are caused to close inward by their cams U^4, thus flattening out the diamond until they rest against the blank, as shown in Figs. 31 and 35, pressing the diamond lightly against the tucker S, the roll M, and the plate M^2. While these side folders remain in this position the tucker S is withdrawn and the blank fed forward into the position shown in Figs. 32 and 36, the diamond being held to shape by the pressure of the wing-folders U until it is engaged by the feeding and pasting rollers N N'.

It will be observed that by the method of opening and forming the diamond on the end of the blank above described the paper falls easily into the desired lines of fold and is not subjected to any undue strains at any point or on any line. The mechanism by which the paper is led to fold itself on the proper lines as it advances through the machine is all of it simple and easily constructed, and all parts which have a reciprocating motion, or which move faster than the main feeding-rolls, are exceedingly light, so that the machine is exposed to no shocks and can be made to work with great rapidity.

The distending-fingers V and the grippers K^3 on roll K' coact together in such a way that the points at which they touch the blank just before the distending-fingers begin to close and the grippers to move from over the lower side of the blank will be distant from each other by nearly the breadth of the side of the bag. They coact, therefore, to distend the tube on the plane of the bag-bottom, and as the tucker prevents the distention of the blank from extending back of the line z^2, which it defines, this distention causes the paper to bend in curves which approximate in position to the lines which define the triangular folds, (marked z z in Fig. 4). The downwardly-bent end of the former-plate E^2 pulls down the front point of the diamond, so that at the time when the distending-fingers and grippers release their hold upon the blank it has already begun to assume the diamond shape, the folds z' z' being to some degree bent inward in the direction of their final position, and as the tucker S continues its downward motion and the side of the blank resting over roll L' is drawn backward the longitudinal extension of the distended end of the tube is continued and the side folds z' z' move gradually downward toward their final position, as shown in Fig. 4, the narrow feed-roll M' coacting with roll L' to bring the diamond into shape, but, as will be hereinafter explained, not being essential. As the diamond flattens out, the curved folds, which, as I have stated, were originally made on approximately the lines of the triangular folds z z, are flattened and compacted together, so that when the hinged or wing folders U U come into play all the lines of the diamond are so nearly defined that only a slight pressure is needed to crease the paper into the proper permanent folds and deliver it to the rollers N N' to be further compacted and provided with the proper lines of paste.

The particular construction and arrangement of the mechanism for opening one end of the blank and spreading it out into the diamond form which I have described and illustrated in the drawings is in my belief the best form in which I have embodied or contemplated embodying my invention. Many of its features, however, are capable of extensive modification, and some parts may be dispensed with entirely. For instance, the rollers L L' may be replaced with a stationary or movable plate for supporting the top of the blank above the distending-fingers, or the fingers themselves may be made to serve the purpose of said rollers, and the shape of the fingers and the mechanism for actuating them are capable of almost indefinite variation.

In Figs. 43 to 47, inclusive, I have illustrated a modification which will be readily understood. The fingers (here marked V^3) are pivoted upon a rock-shaft marked V'^3, which shaft also carries a plate which I have marked VI, said plate being so placed that the fingers V^3, in moving toward each other, would pass underneath it to the position indicated by the dotted lines in Fig. 44. V^{3a} are rollers secured on the ends of the fingers V^3, and V^{3a} is a cam secured upon the rock-shaft V'^3, by the rotation of which the rock-shaft, with its

fingers and plate VL, moves from the position shown in dotted lines in Fig. 45 to that shown in full lines. A properly-formed cam-surface in or against which the rollers V^{2a} rest will cause the fingers V^a to move outward to the position shown in Fig. 44 as the rock-shaft and its plate VL are moved outward. It will at once be recognized that the fingers arranged in this way have a very similar motion to the fingers shown in the other drawings and will act to distend the tube in the same way, and it will also be apparent that the plate VL will serve the purpose of the roller L′ in drawing out the back end of the diamond as the blank moves backward over it after the blank has been distended and the fingers closed together.

Still another modification is illustrated in Figs. 48 to 54, inclusive. The distending-fingers in this construction I have marked V^b. They are pivoted upon a block V'^b, which remains stationary and have an annular flange, as shown, between which and the block V'^b a plate v is situated. The spindles of the fingers V^b pass through slots v^b in the plate v, and the annular flanges of the fingers are slotted, as is shown at V^{2b}, so as to engage projections V^{3b} on the plate v. Plate v is given a backward and forward motion by means of any convenient gearing, Fig. 48 showing it in its forward position, and Fig. 49 showing it in its backward position, its connection with the fingers V^b causing them to move from the position shown in Fig. 48 to the position shown in Fig. 49 as it moves backward, and of course moving the fingers from the position shown in Fig. 49 to that shown in Fig. 48 as it moves forward. These fingers are placed with respect to the rollers K K′ as is shown in Fig. 53, and the blank is delivered over said fingers in the manner shown in this figure until when it is moved forward sufficiently the plate v moves backward, when the fingers are thrown into the position shown in Fig. 49, distending the blank in the way indicated in Fig. 54, after which the fingers are moved back to the position shown in Figs. 48 and 53 and the blank then drawn backward over the points of the fingers, which of course in this position answer the same purpose as the roller L or the plate VL in bringing the diamond into form. When the roll L′, or a plate such as VL, is used to support and guide one side of the blank, I prefer that the ends of the fingers should lie beneath it when in their forward position, the rim of the roll or edge of the plate being shaped, as shown, to permit of this.

For the purpose of clearly defining the scope of my invention, I have in Figs. 55 to 62 illustrated a number of modifications in the mechanism for opening the mouth of the blank for distending it and for drawing out the diamond. Many of these modifications being alternative to devices claimed are not for that reason specifically claimed in this application, but will be made subject-matter for subsequent applications. In Figs. 55 to 58 I have illustrated a substitute for the gripping-fingers K^2 K^2, consisting of a second pair of distending-fingers, which, like those before referred to, act upon the inside of the tube, and, like the grippers K^2, coact with the fingers V V in distending the blank on the plane of the bag-bottom. In Figs. 55 and 57 I have illustrated the double distending-fingers in the position they occupy when receiving the advancing blank from the rolls K K′, and in Figs. 56 and 58 I have shown them in the position they occupy when acting to distend the blank. The second pair of distending-fingers are marked V V V V, and the rock-shaft in which they are journaled V′ V′. The arms corresponding to arms V^2 of the upper fingers are marked V^3 V^3, the cam which reciprocates them V^3 V^3; the arm on the rock-shaft V^4 V^4 the roller carried by said arm V^3 V^3, and the cam which moves the rock-shaft is marked V^5 V^5. In all respects the actuating devices for the lower fingers are, as shown, similar to those of the fingers V, and it will at once be seen that with respect to the fingers V, the tucker S, and the rest of the mechanism for forming the diamond the fingers V V are the equivalents of the grippers K^2, which I prefer to use. I have mentioned before that the rolls M M′ are not essential, and in Figs. 57 and 58 have shown the end of the prolonged former E^2 as extending down to the pressing-rolls N N′. It will be apparent that the narrow plate E^2 will, in connection with the roll L or a narrow support such as I have already described, act to draw out the ends of the distended blank to the diamond form, just as, though perhaps not so well as, the roll M′.

In Figs. 59 to 66 I have shown another modification of the device for distending the tube, in which, instead of using the distending-fingers V V to engage the corners of the upper side of the blank, I employ external grippers, which are caused to engage the blank at the proper points to move with it sufficiently far to coact with the fingers K^2 K^2 in distending the blank, and then to release the blank.

V^k is a bearing-shaft, on which I suspend an oscillating frame $V^{k'}$, having tubular extensions V^{k2}, arranged at a distance apart somewhat greater than the breadth of the bag-blank. At the top of the tubular extensions V^{k2}, I form cams V^{k3}.

V^{k1} V^{k1} are rods passing through the tubes V^{k2} at their upper ends. Cam-surfaces V^{k3}, corresponding with cams V^{k3}, are formed, and arms V^{k3}, firmly secured to the rods, extend out at right angles to them. At the ends of arms V^{k3} rollers V^{k3} are secured, and a spring V^{k7} is provided to hold the said rollers in contact with cams V^{k10}, secured on a shaft V^{k9}, which is actuated by gearing from the machine, as indicated by the dotted lines in Figs. 59 and 60. The cams V^{k10} act through arms V^{k5} on the rods V^{k1}, causing them to have

a reciprocating rotation in the tubes V^{x2} and at the same time to move longitudinally up and down therein, owing to the conformation of cams V^{x3} and V^{x6}. Another cam-surface V^{x11} on shaft V^{x5} acts on a roller V^{x12}, secured to frame $V^{x'}$, giving it a reciprocating oscillation on its bearing-shaft V^{x}. Jaws V^{x13} are secured at the end of tubes V^{x2} on rods V^{x4}, and spring jaws or grippers V^{x14} are attached to the end of said rods by being clamped between jaws V^{x13} and pins V^{x15} on the ends of rods V^{x1}, as shown.

The operation of the device is easily followed. The cam V^{x11} throws the frame $V^{x'}$ forward into the position shown in Fig. 59, where the jaws V^{x13} lie above and the open spring jaws or grippers below the upper side of the blank Z as it advances from rolls K K'. At the point where cam V^{x11} allows the frame to move away from rolls K K' the cams V^{x10} act on the arms V^{x3} and cause the rods V^{x7} to turn and move upward, thus simultaneously moving the jaws V^{x13} inward and the grippers V^{x14} inward and upward, so that they will pass beneath the edges of blank Z and clamp the corners of its upper side against the jaws V^{x13}, which lie above said blank. The frame then moves forward to the position shown in Fig. 60, the grippers V^{x14} holding the upper corners of the blank, while at the same time its lower corners are drawn down by grippers K^2 and the blank thus distended as before. When the distention is effected, the cams V^{x10} allow the rods V^{x4} to revolve outward and move downward, thus releasing the blank. The tucker S and the mechanism for drawing out the diamond are in no wise affected by the use of the above-described modification of the distending device, and the general character and mode of operation of the machine are the same as where my preferred distending device is used.

In Figs. 67 and 68 I have shown a device for opening the blank as it passes through the rolls K K', which enables me to dispense with the bent plate E^2 and takes its place with respect to the rest of the diamond-forming mechanism. In these drawings, E^c is a clamping-finger secured in a central cavity in roll K', so that its outer edge will in one position lie against the center of the roll-face, as shown in Fig. 67. This clamping-finger is secured on a shaft E^b, which is journaled in roll K' and has on its outer end and to one side of the roll an arm, to one end of which is secured a cam-roller E^d, while to another end is secured a spring E, which acts to draw the end of finger E^c away from the surface of roll K'. On a support E', I secure a cam E^e, of such form and so placed that the roller E^d will come in contact with and move along it for a determined distance, its action being to move the clamping-finger forward, so that it will grip the top of roll K'. This cam is placed so as to cause the finger E^c to clamp the lip of an advancing blank Z on the surface of roll K' and to open its mouth as the roll moves forward, as is shown in Fig. 68.

It will be at once seen that, so far as the opening of the mouth of the blank is concerned, the clamping-finger acts in the same way as the curved plate E^2, and to supplement the clamping-finger in drawing out the lower end of the blank to a diamond form I secure a narrow guide-plate E^z on a support E^b, said plate serving the purpose of the prolonged end of E^2 in its drawing-out function.

As to the tucker S, it is of course important that it should move so as to engage the blank at a proper time and in the proper line. It is also important that it should move downward or with the blank for a sufficient distance to definitely define the fold *z*; but the mechanism for guiding and operating this tucker which I have shown in the drawings is given simply as one way, and I believe a very good way, of imparting the required motions, and could be varied and modified very greatly by any mechanic of ordinary skill.

The side or wing folder-plates U U are simple and convenient devices for holding the diamond in shape as it passes to the pressing and pasting rolls N N'. They are not, however, essential, as their place could be, to a certain extent at least, supplied by stationary guides. It is of course evident that these folder-plates could be actuated from other points of the machine than the shaft 19, and that while for simplicity and compactness it is advantageous to have them move on axis parallel to the plane of the diamond they could have their axis on other lines, if desired.

Passing next to those portions of the machine shown in Figs. 41, 42, and 43, and by which the bag is completed ready for use, N N' are, as I have already stated, rollers between which the diamond is compressed and by which lines of paste are applied to the diamond.

W is the paste-roll, secured on shaft 21, so as to be within the paste-trough W^3. The shaft 21 and paste-box W^3 are pivoted by supporting-arms W^4 on the studs W^5, and the roll W is held against the roll N' by an elastic pressure.

W^6 is a latch for holding the arms W^4 in position, W^7 W^7 notches in the latch-arm W^6, and W^8 a boss on the frame D^3 with which the notches W^7 engage. The roll W has grooves W' cut in its face to hold paste, said grooves being of the size and form of the lines of paste to be applied to the diamond of the blank.

A scraper W^2 serves to remove the paste from the plain surface of the rolls W, leaving the grooves W' full to the brim. As the roll W revolves in contact with roll N', lines of paste are, as it may be said, printed on the face of roll N' and are conveyed by it to the diamond of the blank as it passes between the rolls N and N'.

N^3 are guides between which the compressed blank passes after leaving the rolls N N'.

N^3 are supports for the guides N^3, and at N^4, I have indicated a groove in the rollers N and N', which permits the top of the guides N^3 to extend to or nearly to the point of contact of the rolls.

O O' are feed-rollers mounted on shafts 23 and 24.

25 and 26.

P^2 P^2 on roll P' are creasing-blades, and P^2 P^2 on roll P are grooves into which the blades P^2 enter.

P^3 P^3 on roll P' are springs.

Q is a segmental roller mounted on shaft 29 and having the peculiar form illustrated in Figs. 41 and 43—that is, it is made up of two segmental disks, the inner sides of which are distant from each other by less than the breadth of the bag-blank, and are provided with recesses Q^4 Q^4 near the forward or advancing end of their segmental peripheries. The angular velocity of Q is double that of the rolls P P'.

Q^2 Q^2 are guide-rolls, Q^2 also serving as a feed-roll.

Q^4 and Q^4 are guide-plates.

R, R', R^2, and R^2 are rollers around which the apron R^4 moves. The roller R is mounted on the shaft 30 and communicates motion to the apron.

R^3 R^3 are tapes which pass around the roller R' and around pulleys on the shaft 28. The inner edges of these tapes are closer together than the breadth of the bag-blank.

X is a revolving arm mounted on the shaft 28 and having at its end the forked arm X' and segmental presser-plate X^2.

Y is a pipe having at its end a perforation or nozzle, so that a blast of air passing through the pipe will escape as a jet in the direction indicated by the arrows in Fig. 41.

The gearing by which the aforesaid operative parts of the machine are actuated is easily followed on Figs. 41 and 42. The gear-wheel 20^x engages the gear-wheel 21^x on shaft 21, so as to communicate to the roller W a rotation which will give it the same velocity as that of the roller N', with which it is in elastic contact. Another wheel 20^b on shaft 20 engages an intermediate wheel 22^b on shaft 22, said intermediate wheel meshing with the wheel on shaft 23, of the same dimensions as the wheel 24^b, (shown in Fig. 42,) with which it engages, so as to rotate the shafts 23 and 24 with the same velocity, and through them the feed and presser wheels O and O'. Intermediate wheel 22^b also engages a wheel on the shaft 25, of the same dimensions as the wheel 26^b on the shaft 26, the wheels on shafts 25 and 26 being also engaged so as to rotate the two rollers P and P' with the same speed, said speed being such that the angular velocity of the shafts 25 and 26 will be half that of the rolls N N'. The gear-wheel 26^b engages with the wheel 27^b on the stud 27, and this wheel engages the wheel 29^a on shaft 29, so as to rotate the segmental roller Q with a surface velocity double that of the rollers P P'. The intermediate wheel 27^b also engages a wheel 28^b on shaft 28 to rotate the arm X. The segmental presser-plate X^2 should move with about the same velocity as the apron R^4. A gear-wheel 29^c on shaft 29 engages with a gear 30^c on shaft belt R^4.

Of course the above system of gearing can be modified and changed in any desired way without in any way affecting the operation of the operative parts of the machine.

These parts of my machine operate upon the bag-blank as follows: The blank, as I have already explained, is compressed and has lines of paste applied to its diamond while passing through the rolls N N'. After leaving these rolls it passes between the guides N^3 and between the rollers O O', which deliver it to the rolls P P'. These rollers have double the diameter of the rolls N N', so that two blanks pass between them for each complete revolution, the creasing-blades P^2 and grooves P^2 being placed so that they will crease the diamond on the lines of the two final folds x^3 and x^4. The springs P^3 serve to push the blank in the direction of the axis of the roll P as it passes from between the rolls P P', so that it will be presented to the segmental roller Q in the proper direction, as indicated in Fig. 41. It will be at once seen that the segmental roll Q cannot engage the points of the diamond, which are delivered to it with the forward end of the diamond slightly in advance of the advancing edge of its periphery. The position of the roll Q is such that the angular slots Q^4 will come about to the position shown in Fig. 41 at the time when the air-blast from pipe Y strikes the back point of the diamond, the blast blowing down this point of the diamond, as shown in Fig. 41, so that its outer edges rest against the front edge of the angular slot. As the roller Q has a surface speed twice as great as the motion of the blank at this point, the back edge of the slot soon comes in contact with the edges of the creased back end of the diamond and pushes it forward and downward upon the center of the diamond, so that by the time the blank is released from the rolls P P' the back fold is completed, being held in position between the guide-roller Q^2 and plate Q^4 and the plain surface of the disks composing the roller Q. At this point the blank is gripped between the plain surfaces of the disks Q and the roller Q^2 and is fed forward with accelerated speed, the slots Q' in the roller Q being so placed that they will be over the roller Q^2 at the same time that the line x^4 x^4 of the blank lies on said roller. In this way I avoid any pressure on the crease x^4 x^4, as at no other point save on roller Q^2 is there any clamping action between the segmental roller Q and the guide

plates or rollers, between which and the roll the blanks pass. The rotating arm X is so placed that the segment X^2, which is a little longer than the portion of the diamond folded down at the back, shall press the blank against the roller R a little in front of the back fold and remain in rolling contact with said roller R while the said back fold is passing over it. In this way this fold of the diamond is pressed out upon the center and securely pasted to it. The forked arms X' in front of the segthe time when it is released by the roller Q and before the segment X^2 comes in contact with it. It also serves to push the front end of the diamond down in the direction of the apron R^1, so that it will strike the tapes R^3 at a proper angle. The front end or flap of the diamond will extend between the tapes R^3 for nearly its whole length, the tapes coming in contact only with its broadest portion. In this way the front end of the blank is drawn down between the tapes R^3 with the edge indicated by the letter x^4 foremost, and the roller R' presses the front fold of the diamond down upon its center and upon the already folded back end and compresses it against the apron R^1, thus completing the bag, which, after passing under the roller R', is usually delivered to a drying-cylinder, which holds its bottom together until the paste is sufficiently dry to prevent any danger of its coming apart at the seams.

The above-described apparatus for making the two final folds which complete the bottom of the bag possesses certain novel and valuable features, and is well adapted for use in connection with the mechanism for forming the diamond which I have above described. It is also well adapted for making the final folds on bag-blanks the diamond of which has been formed by other mechanism, and of course any good mechanism for making these final folds might be used in connection with my novel devices for forming the diamond. I therefore wish it to be clearly understood that while my mechanism for forming the diamond and my mechanism for forming the final folds are well adapted to be used together I do not in any way intend to limit those claims which relate to the one mechanism upon the use with them of the other mechanism.

The leading features of my invention will from the above description be easily distinguished. Generally speaking, they may be grouped as follows: first, the combination, with continuously-revolving feed-rolls and a device for partially opening the mouths of the blanks, of a distending device arranged to open the advancing tube in the plane of the bag-bottom; second, the combination, with the distending device, of the reciprocating tucker by which the folds lying above the bag-bottom are defined during and subsequent to the distention of the tube; third, the combination of a narrow support for the upper side of the distended blank with a narrow guide for the lower side, said support and guide being arranged as specified, so as to coact in spreading out the distended end of the blank into a diamond form; fourth, the combination, with the aforesaid spreading device, of folder-plates to hold the diamond in shape as it passes to the presser-rolls; lastly, the various combinations of the above elements of my invention with each other and the special and preferred arrangement are important features of my improvement, and will form the subject-matter for most of the claims; but I wish it to be clearly understood that, except where the special mechanical connections shown in the drawings are specifically referred to in the claims, I do not intend my invention to be understood as limited upon their use.

It will, I think, be clear from what has been said above, and indeed from their own characteristics, that the various leading features of my invention are not essentially interdependent, by which I mean, for instance, that my device, consisting of a narrow support to sustain one side of the open tube and a narrow feed-roll to draw down the opposite side and retract the first-mentioned side from said support, while for their efficient action they depend upon having the tube properly opened, does not require that it should be opened by the specific device for distending the tube, which forms another leading feature of my invention. Such distention might be brought about by very different mechanical devices, or even by the hand of the operator.

In the mechanism described for forming the two final folds which complete the manufacture of the bag the principal novelties lie in the use of the segmental rollers Q, having the peculiar form and motion with respect to the creasing-rolls described, and the revolving arm X, with its segments X^2, arranged to operate in connection with the rollers R R', the apron R^1, and the tapes R^3, as described.

In the following claims I have in referring to the unfolded sides of the blank distinguished them by the names "upper" and "lower;" but I do not wish to be understood as referring to their position with respect to the ground, for of course the machine would work as well were all of its operative parts reversed in relative position to the ground. By "upper" side it will therefore be understood that I mean the side directly acted on by the distending-fingers, and by "lower" side the side opposite to said so-called "upper" side.

Having now described my invention, what I claim as new, and desire to secure by Letters Patent, is—

1. In a bag-machine, the device for distending a bellows-folded blank in the plane of the bag-bottom to be formed on it, which consists of feed-rolls for feeding the blanks forward, in combination with a device for opening the advancing end of the blanks as they pass

through the rolls, distending-fingers V V, or equivalent mechanism, as specified, for engaging the corners of the upper side of the blank, and gripping-fingers K^3 K^4, or equivalent mechanism, as specified, for engaging the corresponding corners of the lower side of the blank, said fingers and grippers or their equivalents being arranged and actuated to coact in distending the bellows-sided tube as it advances through the feed-rolls, substantially as shown and described.

2. In a bag-machine, the device for distending a bellows-sided blank in the plane of the bag-bottom and for defining the folds lying above said bottom, which consists of feed-rolls for feeding the blanks forward, in combination with a device for opening the advancing ends of the blanks, a device for distending the advancing blanks, consisting of the fingers V V and grippers K^3 K^4, or their equivalents, as specified, and a tucker having actuating mechanism whereby it is caused to strike and bend the upper side of the advancing blank on or about the line x^3 and to follow the motion of the blank while it is distending and until the fold at x^3 is fully defined, substantially as shown and described.

3. In a bag-machine, the combination, with feed-rolls for feeding the blanks forward, a distending device consisting of fingers V V and grippers K^3 K^4, or equivalent devices, as specified, for distending a bellows-folded tube as it advances through the feed-rolls, and a tucker for defining the folds lying above the distended part of the tube, of a narrow support placed so as to lie under the center of the upper side of the blank as it advances from the feed-rolls during the distention of its end, said support serving to draw out the upper end of the diamond as the upper side of the blank is withdrawn from it after distention, substantially as shown and described.

4. In a bag-machine, the combination, with feed-rolls for feeding the blanks forward, a distending device consisting of fingers V V and grippers K^3 K^4, or equivalent devices, as specified, for distending a bellows-folded tube as it advances through the feed-rolls, and a tucker for defining the folds lying above the distended part of the tube, of a narrow support placed so as to lie under the center of the upper side of the blank as it advances from the feed-rolls during the distention of its end, said support serving to draw out the upper end of the diamond as the upper side of the blank is withdrawn from it after distention, and a narrow guide situated between the feed-rolls aforesaid and the rolls which deliver the diamond-folded blank to the mechanism for completing the bag, said guide being arranged to lie within the lower side of the blank and serve to pull out the front point of the diamond, substantially as shown and described.

5. In a bag-machine, the combination, with feed-rolls for feeding the blanks forward, a distending device consisting of fingers V V, grippers K^3 K^4, or equivalent devices, as specified, for distending a bellows-folded tube as it advances through the feed-rolls, and a tucker for defining the folds lying above the distended part of the tube, of a narrow support placed so as to lie under the center of the upper side of the blank as it advances from the feed-rolls during the distention of its end, said support serving to draw out the upper end of the diamond as the upper side of the blank is withdrawn from it after distention, a narrow guide situated between the feed-rolls aforesaid and the rolls which deliver the diamond-folded blank to the mechanism for completing the bag, said guide being arranged to lie within the lower side of the blank and serve to pull out the front point of the diamond, and folder-plates arranged to close down on the diamond and hold it to form after it is drawn out, as aforesaid, and while the diamond-folded end of the blank is passing to the mechanism which completes the bag, substantially as shown and described.

6. In a bag-machine, the combination, with feed-rolls for feeding the bag-blanks forward and a device for opening the advancing end of the blank as it leaves the rolls, of distending-fingers having actuating mechanism whereby they are made to extend forward to receive the upper side of the partially-opened blank, to move apart so as to engage the corners of said upper side at a selected point, and to move together to permit the retraction of side above them, and grippers K^3 K^4, or equivalent mechanism, as described, to engage the edges of the lower side of the blank and coact with the distending-fingers to open the tube in the plane of the bag-bottom, substantially as shown and described.

7. In a bag-machine, the combination, with feed-rolls for feeding the bag-blanks forward and a device for opening the advancing end of the blank as it leaves the rolls, of distending-fingers having actuating mechanism whereby they are made to extend forward to receive the upper side of the partially-opened blank, to move apart so as to engage the corners of said upper side at a selected point, and to move together to permit the retraction of side above them, grippers K^3 K^4, or equivalent mechanism, as described, to engage the edges of the lower side of the blank and coact with the distending-fingers to open the tube in the plane of the bag-bottom, and a reciprocating tucker having operative mechanism whereby it is caused to strike and bend the advancing blank between the feed-rolls and the distending-fingers, and at the line where the fold x^3 is to be formed in the bag to remain in contact with the blank and move down with it until the fold x^3 is fully defined, and then move up to permit the advance of another blank, substantially as shown and described.

8. In a bag-machine, the combination, with feed-rolls for feeding the bag-blanks forward and a device for opening the advancing end of the blank as it leaves the rolls, of distend-

ing-fingers having actuating mechanism whereby they are made to extend forward to receive the upper side of the partially-opened blank, to move apart so as to engage the corners of said upper side at a selected point, and to move together to permit the retraction of side above them, grippers K^3 K^3, or equivalent mechanism, as described, to engage the edges of the lower side of the blank and coact with the distending-fingers to open the tube in the plane of the bag-bottom, a narrow support placed so as to lie centrally under the upper side of the blank as it advances from the feed-rolls and is distended, a narrow guide placed so as to lie centrally within the under side of the blank as it passes to the presser-rolls which complete the diamond, said support and guide coacting to spread out the distended end of the blank to a diamond form, and a reciprocating tucker having operative mechanism whereby it is caused to strike and bend the advancing blank between the feed-rolls and the distending-fingers and at the line where the fold x^3 is to be formed in the bag, to remain in contact with the blank and move down with it until the fold x^3 is fully defined, and then move up to permit the advance of another blank, substantially as shown and described.

9. In a bag-machine, the combination, with feed-rolls for feeding the bag-blanks forward and a device for opening the advancing end of the blank as it leaves the rolls, of distending-fingers having actuating mechanism whereby they are made to extend forward to receive the upper side of the partially-opened blank, to move apart so as to engage the corners of said upper side at a selected point, and to move together to permit the retraction of side above them, grippers K^3 K^3, or equivalent mechanism, as described, to engage the edges of the lower side of the blank and coact with the distending-fingers to open the tube in the plane of the bag-bottom, a narrow support placed so as to lie centrally under the upper side of the blank as it advances from the feed-rolls and is distended, a narrow guide placed so as to lie centrally within the under side of the blank as it passes to the presser-rolls which complete the diamond, said support and guide coacting to spread out the distended end of the blank to a diamond form, a reciprocating tucker having operative mechanism whereby it is caused to strike and bend the advancing blank between the feed-rolls and the distending-fingers and at the line where the fold x^3 is to be formed in the bag, to remain in contact with the blank and move down with it until the fold x^3 is fully defined, and then move up to permit the advance of another blank, and side folders actuated so as to close down and compress the diamond after it is formed, as aforesaid, and while the diamond-folded end is passing to the presser-rolls, which finally crease it to form and then open out to permit the distention and spreading out of another blank, substantially as shown and described.

10. In a bag-machine, the device for distending the blank in the plane of the bag-bottom, consisting of the feed-roll K′, having a coacting roll, in combination with a device for opening the mouth of the advancing bag-blank as it passes through said rolls, grippers K^3 K^3, pivoted on roll K′ and having actuating mechanism whereby they move inward to engage the corners of the lower side of the blank at selected points, remain in contact with the blank for a definite part of the rotation of the roll, and then move outward and release the blank, and reciprocating distending-fingers V V, having actuating mechanism whereby they are made to extend forward to permit the upper side of the blank to pass over them, to spread out so as to engage the corners of the said upper side at points corresponding to those on the side engaged by the grippers, and to close together again to permit the retraction of said upper side, said distending-fingers and grippers being arranged to coact in distending the blank, substantially as shown and described.

11. In a bag-machine, the device for opening the end of a bellows-folded tube into the diamond form, consisting of the feed-roll K′, having a coacting roll, in combination with a device for opening the mouth of the advancing bag-blank as it passes through said rolls, grippers K^3 K^3, pivoted on roll K′ and having actuating mechanism whereby they move inward to engage the corners of the lower side of the blank at selected points, remain in contact with the blank for a definite part of the rotation of the roll, and then move outward and release the blank, reciprocating distending-fingers V V, having actuating mechanism whereby they are made to extend forward to permit the upper side of the blank to pass over them, to spread out so as to engage the corners of the said upper side at points corresponding to those on the lower side engaged by the grippers, and to close together again to permit the retraction of said upper side, said distending-fingers and grippers being arranged to coact in distending the blank, a narrow guide placed so as to lie centrally within the lower side of the bag-blank as it is withdrawn from the distending-fingers, and a tucker S, having actuating mechanism whereby it is made to strike the blank as it passes from between the feed-rolls on the line where the fold x^7 is to be formed, to move down between the fingers V V and the roll F′ until the fold x^7 is fully defined and the upper side of the distended blank withdrawn from the said distending-fingers, and then retracted, all substantially as shown and described.

12. In a bag-machine, the combination, with feed-rolls for feeding bellows-folded blanks forward, of a curved former-plate E^3, whereby the advancing end of the blank is opened

as it leaves the rolls, mechanism for distending the blanks on the plane of the bag-bottom to be formed and for defining the folds lying above said bottom, consisting of the fingers V V and grippers F^3 F^3, or their equivalents, as described, and a tucker S, all substantially as and for the purpose specified.

13. In a bag-machine, the combination, with the feed-rolls for feeding the blanks forward, a device for distending bellows-folded blanks, consisting of the fingers V V, and grippers F^3 F^3, or equivalent mechanism, as specified, and a tucker S, arranged to coact with said distending device, as described, of the narrow drawing-rollers L L′ and a narrow guide placed to lie within the lower side of the blank and coact with the roll L′ in drawing the distended end of the blank to the diamond form.

14. In a bag-machine, the combination, with the feed-rolls for feeding the blanks forward, a device for distending bellows-folded blanks, consisting of the fingers V V and grippers F^3 F^3, or equivalent mechanism, as specified, and a tucker S, arranged to coact with said distending device, as described, of the narrow drawing-rollers L L′ and the drawing-rolls M M′, said roll M′ being narrow and arranged to rest centrally within the lower blank side, so as to coact with roller L in drawing out the distended end of the blank to the diamond form.

15. In a bag-machine, the combination, with the feed-rolls for feeding the blanks forward, a device for distending bellows-folded blanks, consisting of the fingers V V and grippers F^3 F^3, or equivalent mechanism, as specified, and a tucker S, arranged to coact with said distending device, as described, of a narrow support placed so as to lie centrally under the upper side of the blank as it advances and is distended and the drawing-rolls M M′, said roll M′ being narrow and placed so as to lie centrally within the under side of the blank, so as to coact with the narrow support aforesaid in drawing out the distended end of the blank into the diamond form.

16. In a bag-machine substantially as specified, the combination, of the supporting-roll L′ with the reciprocating distending-fingers V V, so that the ends of said fingers in their forward position lie beneath the rim of said roll.

17. In a bag-machine substantially as specified, the combination of the loosely-journaled roll L′, having a spring-supported sustaining-arm L^4 and adjustable stop L^5, with the drawroll L, having a portion of its surface cut away, so as to loosen the grip of said rolls on the blank and permit its withdrawal from between said rolls.

18. In a bag-machine substantially as specified, the combination of the feed-rolls K K′, the curved former E^2, the rolls L L′, to engage the upper side of the blank, and the guide-plate E^3, for directing said upper side between said rolls.

19. In a bag-machine substantially as specified, the combination, with a rocker-shaft V′, of distending-fingers V V, journaled in said rocker-shaft, and actuating-cams whereby the shaft is oscillated and the fingers rotated back and forward in their bearings, so as to give their points a double reciprocating motion.

20. In a bag-machine substantially as specified, the combination of the feed-roll K′, the fingers K^2 K^2, secured at the outer edges of said roll, and the cams K^2 K^2, whereby said fingers are made to move inward and engage the blank at a certain point to remain in their inward position for a determined period in the rotation of roll K′, and then allowed to move out to release the blank.

21. In a bag-machine substantially as specified, the combination of the tucker S with a reciprocating lever connected with said tucker, cam mechanism for actuating said lever to regulate the up-and-down stroke of the tucker, guides T, within which said tucker reciprocates, a rock-shaft T′, attached to said guides, and cam mechanism for actuating said rock-shaft, so as to guide the edge of the tucker during its downward and upward motion.

22. In a bag-machine substantially as specified, the combination, with the feed-roll K′, of the tucker S, a reciprocating lever connected with said tucker, cam mechanism for actuating said lever to regulate the up-and-down stroke of the tucker, guides T, within which said tucker reciprocates, a rock-shaft T′, attached to said guides, and cam mechanism for actuating said rock-shaft, so as to guide the edge of the tucker during its downward stroke in a path close to the face of roll K′.

23. In a bag-machine substantially as specified, the combination, with the roll M and plate M^2, or equivalent backing, of the folder-plates U U, having actuating cams whereby they are caused to compress and hold the diamond after it is brought to shape and while it passes from the forming mechanism to the presser-rolls, and the presser-rolls N N′.

24. In a bag-machine substantially as specified, the combination of the tucker S, mechanism for actuating said tucker, as specified, the roll M, and plate M^2, comprising a backing or support for the blank or equivalent backing, the folder-plates U U, having actuating-cams whereby they are caused to fold down against the tucker and backing to compress and hold the diamond to form, and the presser-rolls N N′.

25. In a bag-machine substantially as specified, the combination, with the drawing-rolls M M′, the said roll M′ being narrow to aid in drawing out the diamond, as specified, of the presser-rolls N N′ and the folder-plates U U, arranged to fold down against roll M on each side of roll M′ and having actuating-cams whereby said plates are folded down on the diamond and remain in contact with it while it passes to the rolls N N′ aforesaid.

26. In a bag-machine substantially as specified, the combination, with the folder-plates U U, for holding the diamond in shape after it is formed and as it passes to the presser-rolls, of the presser-rolls N N′, and the paste-roll W, held in contact with the roll N′ and grooved to contain lines of paste, substantially as specified, whereby the diamond is, while being compressed, furnished with paste to complete the closing of the bag-bottom.

27. In mechanism for forming the final folds on a diamond-folded bag-blank, the combination of creasing-rolls for creasing the diamond on the lines of its final folds, the segmental double roll Q, rotating with greater speed than said creaser-rolls and having recesses Q^2 to engage the edges of the back flap, and guides to hold the blank in contact with said segmental roll.

28. In mechanism for forming the final folds on a diamond-folded bag-blank, the combination of creasing-rolls for creasing the diamond on the lines of its final folds, the segmental double roll Q, rotating with greater speed than said creaser-rolls, having recesses Q^2 to engage the edges of the back flap, guides to hold the blank in contact with said segmental roll, and a presser-roll Q^3, so placed that the blank will be gripped between it and roll Q after it is released by the creasing-rolls.

29. In mechanism for forming the final folds on a diamond-folded bag-blank, the combination of creasing-rolls for creasing the diamond on the lines of its final folds, the segmental double roll Q, rotating with greater speed than said creaser-rolls, having recesses Q^2 to engage the edges of the back flap, and recesses Q′, guides to hold the blank to the face of roll Q, and a presser-roll Q^3, to coact in feeding the blank forward when it is released by the creasing-rolls, all substantially as and for the purpose specified.

30. In mechanism for forming the final folds on a diamond-folded bag-blank, the combination, with the double segmental roller Q, of the roll R and the rotating arm X, having the segmental presser-plate X^2 for pressing the back flap down upon the bottom of the blank.

31. In mechanism for forming the final folds on a diamond-folded bag-blank, the combination, with the double segmental roller Q, of the roll R, the rotating arm X, having the segmental presser-plate X^2 for pressing the back flap down upon the bottom of the blank, the apron R^1, the roll R′, and the tapes R^3, coacting to press down the front flap and complete the bag.

32. In mechanism for forming the final folds on a diamond-folded bag-blank, the combination, with the double segmental roller Q, of the roll R, the rotating arm X, having the segmental presser-plate X^2 for pressing the back flap down upon the bottom of the blank, and the fork X′, the apron R^1, the roll R′, and the tapes R^3, coacting to press down the front flap and complete the bag.

CHAS. B. STILWELL.

Witnesses:
FRANK A. MULLIKIN,
JOSHUA MATLACK, Jr.

(No Model.) 6 Sheets—Sheet 1.

W. A. LORENZ & E. E. CLAUSSEN.

PAPER BAG MACHINE.

No. 410,841. Patented Sept. 10, 1889.

Fig. 1

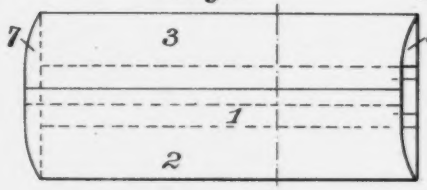

Fig. 3

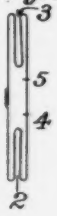

Fig. 7

Fig. 2

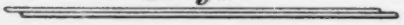

Fig. 4

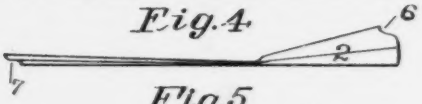

Fig. 8

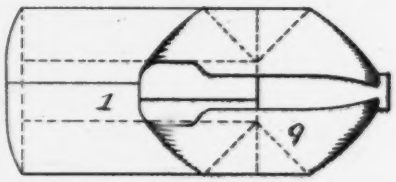

Fig. 5

Fig. 9

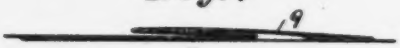

Fig. 6

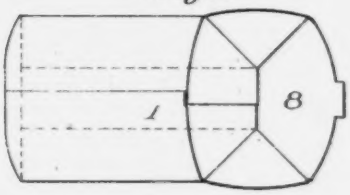

Fig. 10

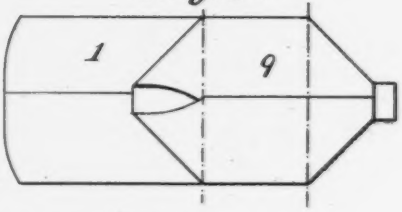

Fig. 18.

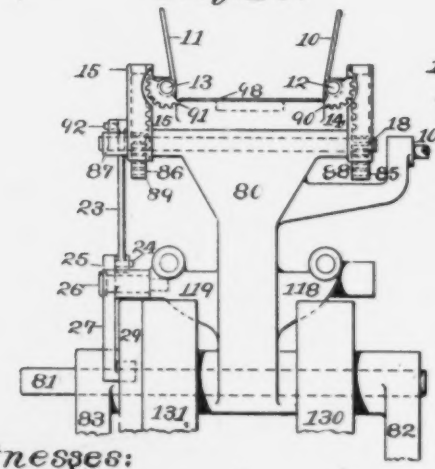

Fig. 17

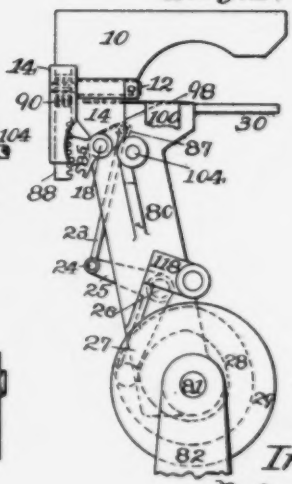

Witnesses:
Albert H. Walker
Jno. P. White

Inventors:
William A. Lorenz
Edward E. Claussen

(No Model.) 6 Sheets—Sheet 2

W. A. LORENZ & E. E. CLAUSSEN.

PAPER BAG MACHINE.

No. 410,841. Patented Sept. 10, 1889.

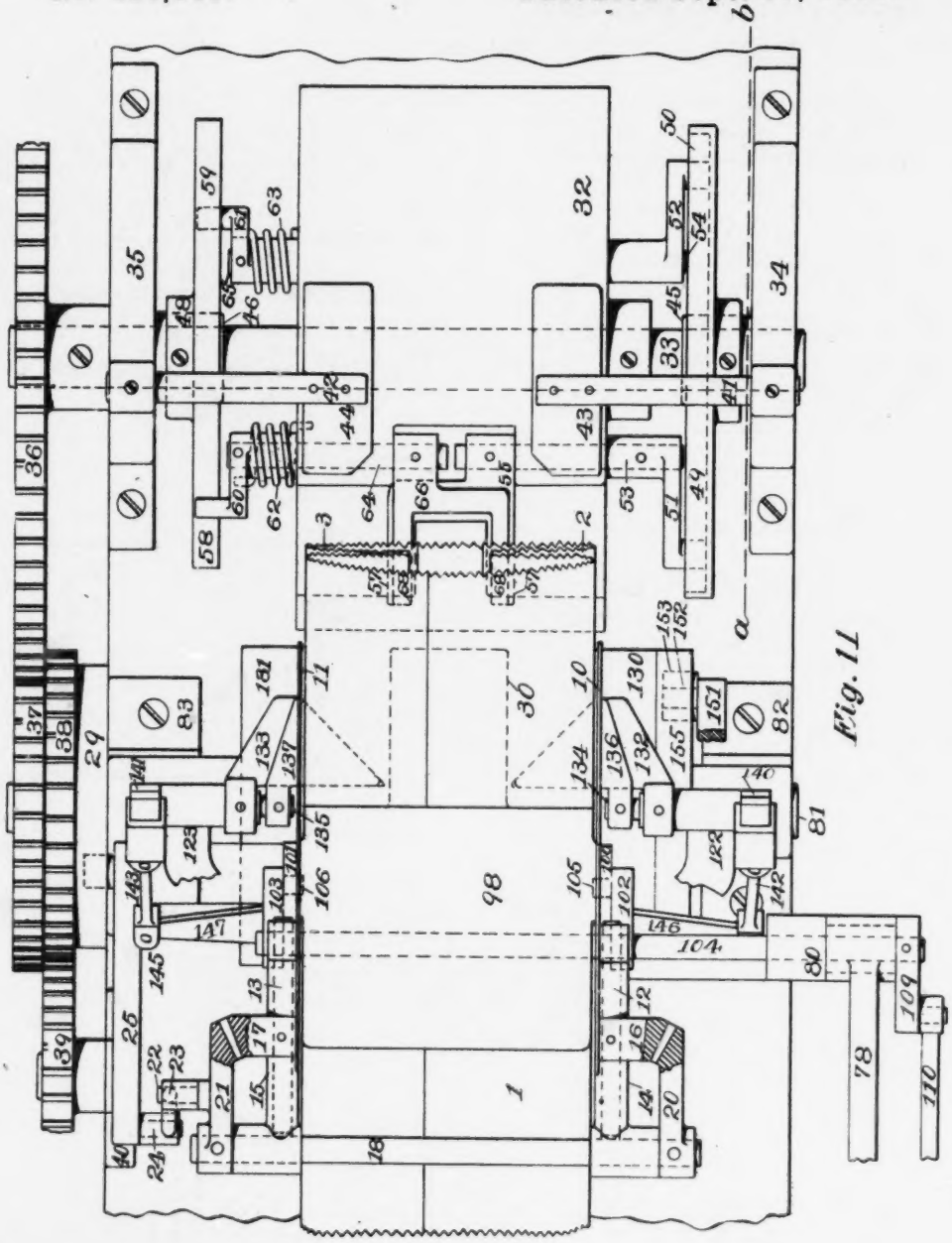

Fig. 11

Witnesses:
Albert H. Walker
Geo. H. White

Inventors:
William A. Lorenz
Edward E. Claussen

(No Model.) 6 Sheets—Sheet 3

W. A. LORENZ & E. E. CLAUSSEN.

PAPER BAG MACHINE.

No. 410,841. Patented Sept. 10, 1889.

Fig. 12

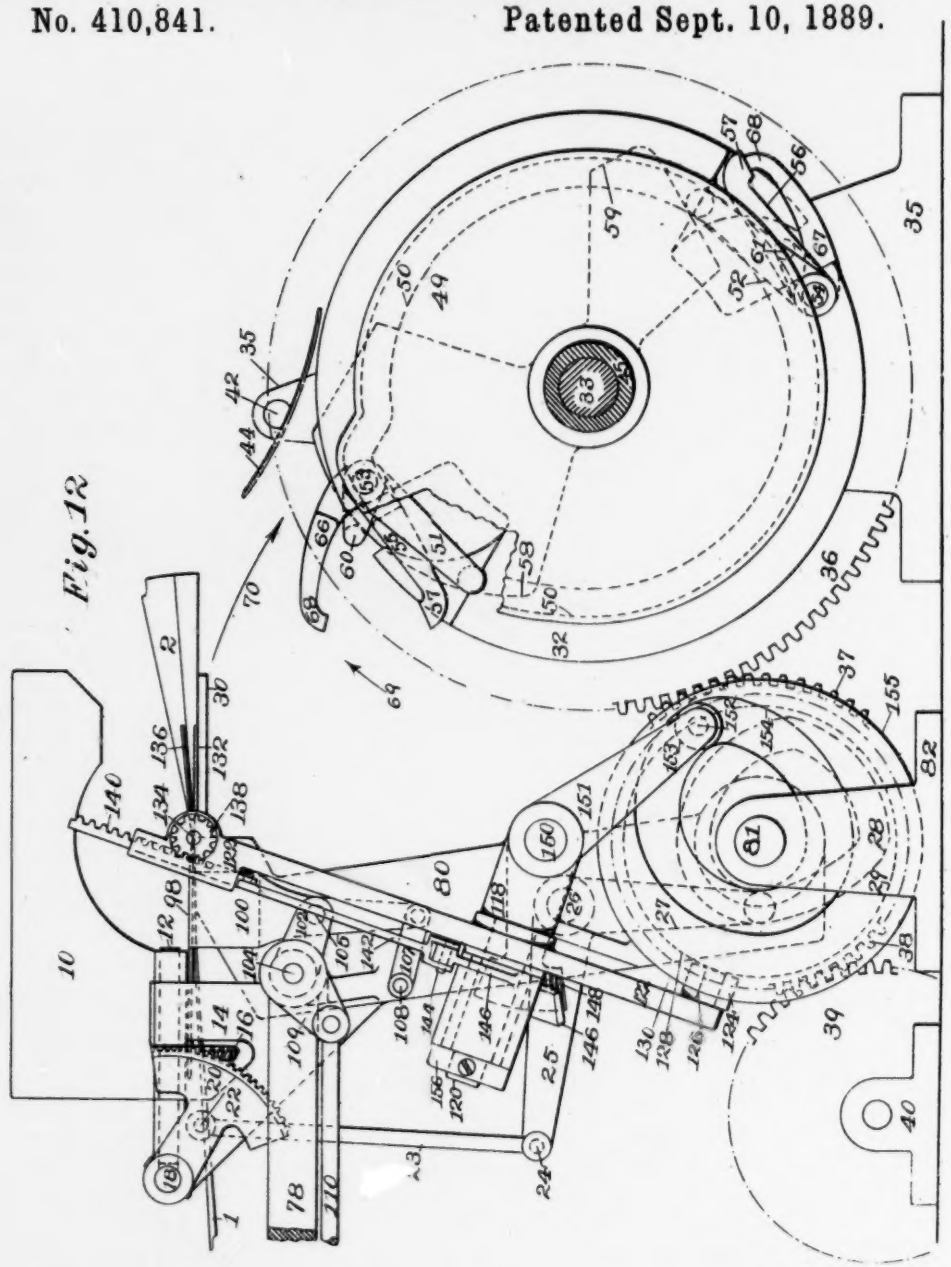

Witnesses:
Albert H. Walker
Jno. A. White

Inventors:
William A. Lorenz
Edward E. Claussen

(No Model.) 6 Sheets—Sheet 4

W. A. LORENZ & E. E. CLAUSSEN.

PAPER BAG MACHINE.

No. 410,841. Patented Sept. 10, 1889.

Fig. 13.

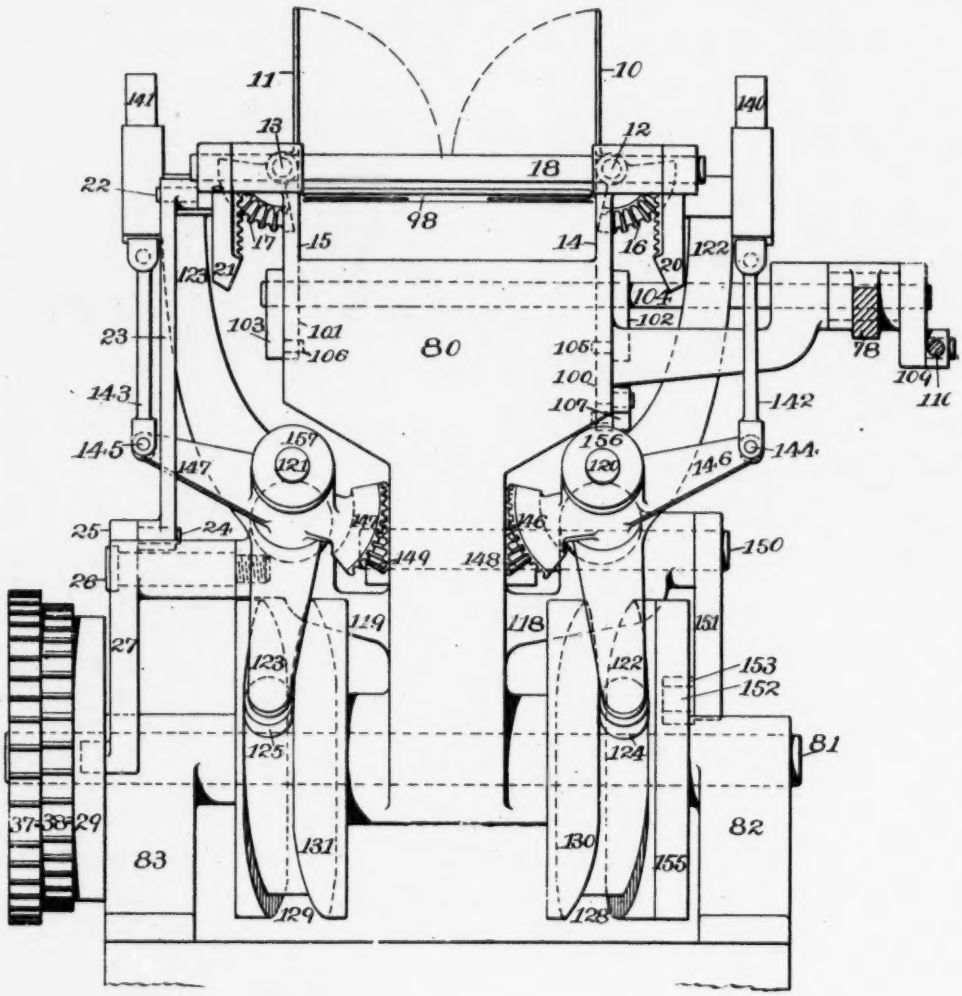

Witnesses:
Albert B. Walker
Inventors:
William A. Lorenz
Edward E. Claussen

(No Model.) 6 Sheets—Sheet 5

W. A. LORENZ & E. E. CLAUSSEN.

PAPER BAG MACHINE.

No. 410,841. Patented Sept. 10, 1889.

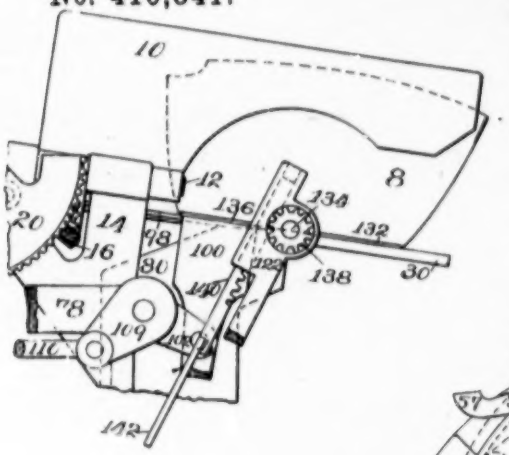

Fig. 14

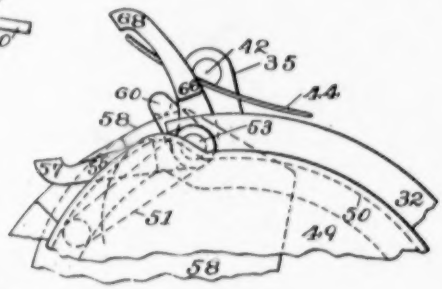

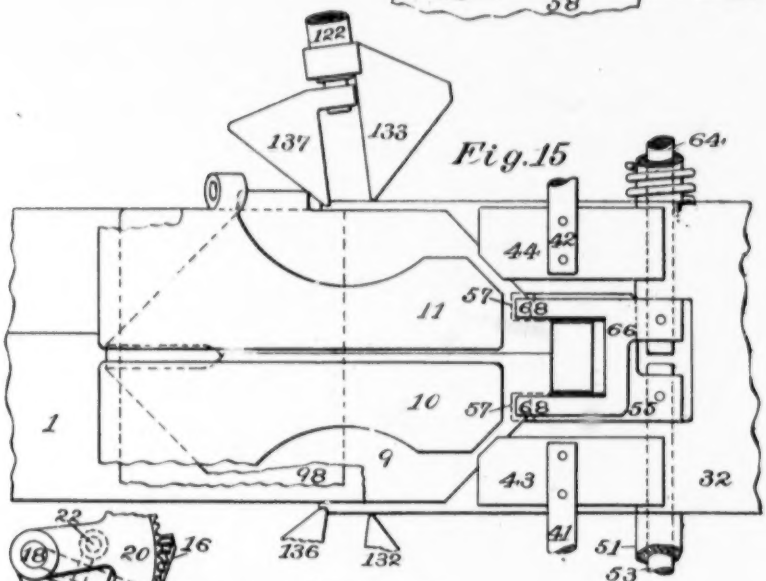

Fig. 15

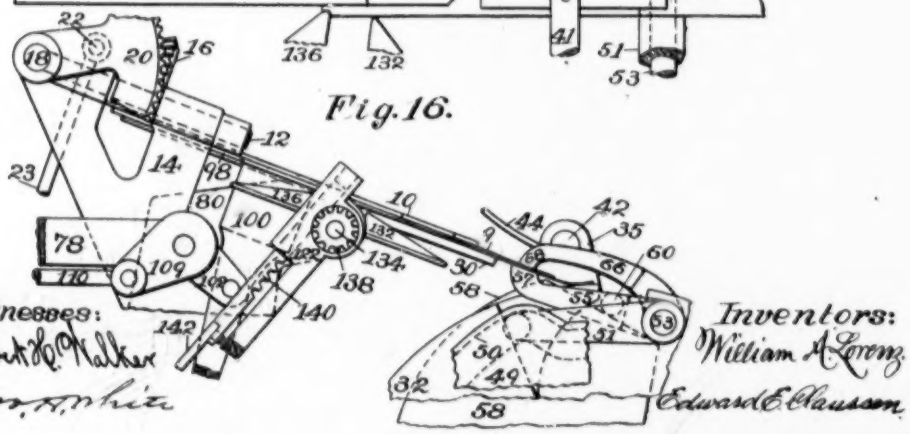

Fig. 16.

Witnesses:
Albert H. Walker
Jno. A. White

Inventors:
William A. Lorenz.
Edward E. Claussen.

(No Model.) 6 Sheets—Sheet 6.

W. A. LORENZ & E. E. CLAUSSEN.

PAPER BAG MACHINE.

No. 410,841. Patented Sept. 10, 1889.

Fig. 19

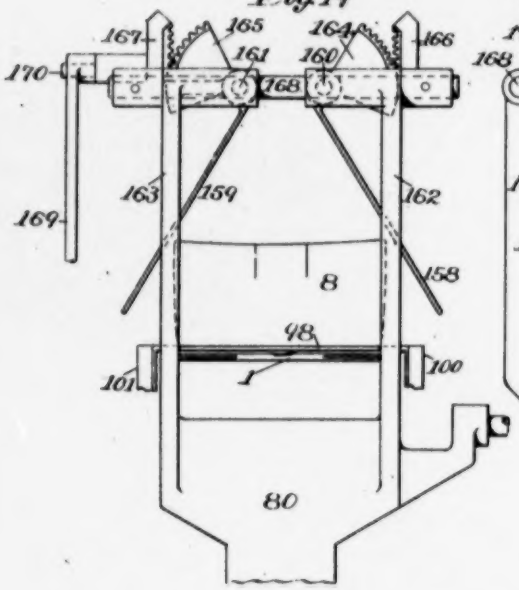

Fig. 20

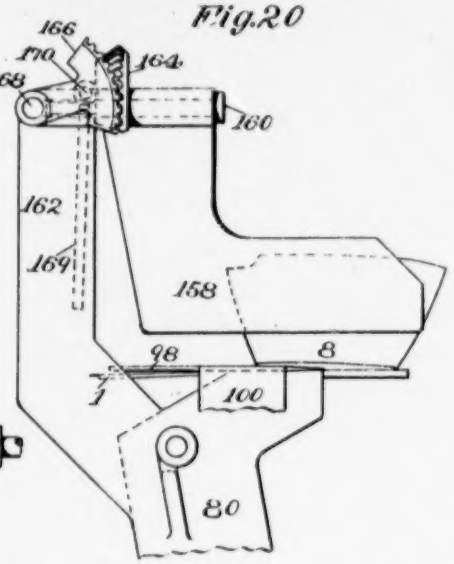

Fig. 21

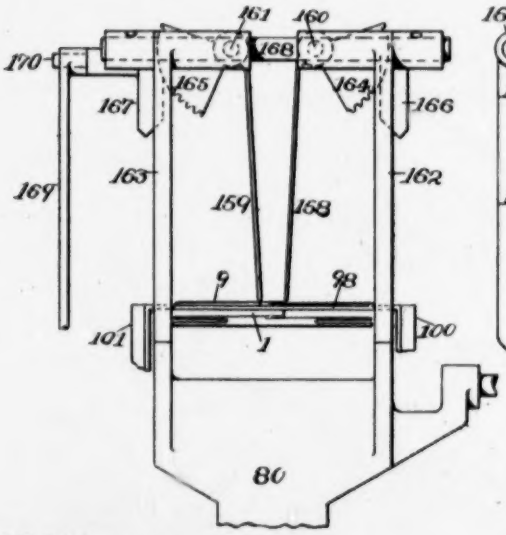

Fig. 22

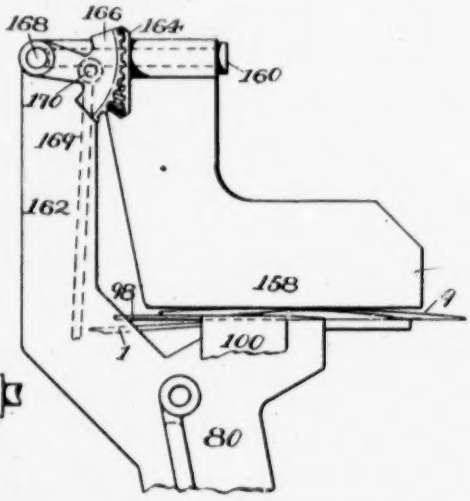

Witnesses:
Albert H. Walker
Jno. White

Inventors:
William A. Lorenz
Edward E. Claussen

UNITED STATES PATENT OFFICE.

WILLIAM A. LORENZ AND EDWARD E. CLAUSSEN, OF HARTFORD, CONNECTICUT, ASSIGNORS TO FELIX W. LEINBACH AND CLARENCE A. WOLLE, OF BETHLEHEM, PENNSYLVANIA.

PAPER-BAG MACHINE.

SPECIFICATION forming part of Letters Patent No. 410,841, dated September 10, 1889.

Application filed December 10, 1888. Serial No. 293,110. (No model.)

To all whom it may concern:

Be it known that we, WILLIAM A. LORENZ and EDWARD E. CLAUSSEN, of Hartford, Connecticut, have jointly invented certain new and useful Improvements in Paper-Bag Machines, of which the following description and claims constitute the specification, and which is illustrated by the accompanying six sheets of drawings.

These improvements are particularly applicable to the paper-bag machine which is shown in Letters Patent of the United States, No. 361,951, to Lorenz and Honiss, of April 26, 1887, and they consist in mechanism to make the "diamond" fold described in that patent, and in mechanism for delivering the diamond-fold blank from one traveling folding bed to another.

Figures 1, 2, and 3 of the drawings are a plan, a side, and an end view, respectively, of a portion of a tucked paper-tube, which is called by us a "blank." Fig. 4 is a side view of this blank pressed together near its center. Figs. 5 and 6 are a side and a plan view of the blank, showing one end opened up into a box-like form. Figs. 7 and 8 are a side and a plan view of the blank, showing the box-like form partly folded down into the shape which we term the "diamond." Figs. 9 and 10 are a side and a plan view of the same, fully folded down. Fig. 11 is a plan of the machine. Fig. 12 is partly a side view thereof and partly a vertical section on the line *a b* of Fig. 11. Fig. 13 is a rear end view of the left-hand portion of Figs. 11 and 12, looking from left to right. Fig. 14 is a side view of portions of Fig. 12, with a bag folded into the box-like form. Figs. 15 and 16 are a plan and a side view, respectively, of the upper portion of the machine, showing the bag folded into the diamond form. Figs. 17 and 18 are a side and an end view of a modified form of the diamond-folding mechanism. Figs. 19 and 20 are an end and a side view of another such modification. Figs. 21 and 22 show the same modification in another position.

For greater clearness, the gears 36, 37, 38, and 39 are not shown in full in side view, but have teeth omitted.

The numeral 1 indicates a bag-blank severed from a continuous tucked paper-tube, and having two inwardly-projecting tucks 2 and 3, and longitudinal slits 4 and 5, a lip 6, a corresponding recess 7, the tucks extending the entire length of the blank, and the slits extending only a short distance into one end thereof, as shown in Figs. 1 and 3. The form which we call the "box" is that shown in Figs. 5 and 6, and is marked with the numeral 8. The form which we call the "diamond" is that shown in Figs. 7 to 10, and is marked with the numeral 9.

In this machine a blank is being delivered to a traveling folding-bed and the box form is first folded, then the diamond form is folded, and then the partly-folded bag is delivered to another traveling folding-bed, where subsequent operations may be performed thereon.

The two traveling folding-beds are made in the form of a rocking carriage and a revolving cylinder, respectively, and are similar to the two beds shown and described in said Letters Patent No. 361,951; but in that patent there is shown intermediate rolls that grip and pass the bag from the first to the second bed, while in this machine these intermediate rolls are omitted. The rocking carriage has three mechanisms attached to it, which are similar in form and in operation to those described in said Letters Patent No. 361,951, and they compose a presser-plate mechanism, a tuck-entering mechanism, and a blade-folding mechanism, and the carriage itself is oscillated by a crank and connecting-rod, as shown in that patent.

The carriage is indicated by the numeral 80, is pivoted on a shaft 81, and is worked forward and backward by a connecting-rod 78. Upon the upper part of the carriage 80 there is a presser-plate 98, secured to two brackets 100 and 101, which brackets receive vertical motion from two presser-arms 102 and 103, which are fixed to a rocking shaft 104, and which carry pins 105 and 106, which enter the brackets 100 and 101. To the lower end of the bracket 100 a link 107 is attached, and is pivoted at 108 to the carriage, and gives the presser-plate a parallel motion. To the shaft 104, at the outer end of the car-

riage 80, there is attached an arm 109, to which is pivoted a connecting-rod 110, which receives motion like that shown in said Letters Patent No. 361,951.

The carriage 80 has two ears 118 and 119, carrying fixed studs 120 and 121, upon which are placed the two rocking tuck-levers 122 and 123, carrying cam-rolls 126 and 127, which run in cam-grooves 128 and 129 of cams 130 and 131, which cams are attached to the gears 85 and 86, running upon the shaft 81 at both sides of the carriage 80. To the upper end of these tuck-levers 122 and 123 are secured tuck-blades 132 and 133, which have angular ends projecting inwardly toward the center of the machine, and these blades receive a reciprocating motion in and out from the carriage 80 as the cams 130 and 131 revolve.

In the upper ends of the tuck-levers 122 and 123 are placed two shafts 134 and 135, to which are secured box-blades 136 and 137, which also have angular ends. These blades 136 and 137 are operatively connected with a cam on the shaft 81, and receive therefrom a rotary reciprocating motion of about one hundred and eighty degrees, as shown in Figs. 11 and 16, respectively. This movement is attained by means of pinions 138 and 139, fixed on the box-blade shafts 134 and 135 and driven by the racks 140 and 141, which slide in casings attached to the upper ends of the tuck-levers. These racks are operated by means of connecting-rods 142 and 143, which are connected at the pivots 144 and 145 to oscillating levers 146 and 147. These oscillating levers swing upon the hubs of the tuck-levers 122 and 123, which oscillate upon the studs 120 and 121. The opposite ends of the oscillating levers 146 and 147 are bevel-sectors, which mesh into bevel-sector arms 148 and 149, fastened to the shaft 150, which oscillates in ears in the carriage 80.

To the outer end of the shaft 150 is secured the arm 151, carrying a pin 152, upon which a roller 153 revolves, engaging in a cam-groove 154 in the cam 155, which cam is fixed to the other cam 130 and revolves with it, thus transmitting an oscillating motion simultaneously to the arms 146 and 147, and through them giving oscillating motion to the box-blades 136 and 137. The tuck-levers 122 and 123 and the levers 146 and 147 are all held upon the studs 120 and 121 by the collars 156 and 157. The tuck-levers 122 and 123 receive the proper oscillating motion from the cams 130 and 131 at suitable intervals, thus driving the blades attached to their upper ends to and from the carriage. The levers 146 and 147 also receive a proper oscillating motion from the cam 155 at suitable intervals, transmitting an oscillating motion to the box-blades 136 and 137, all of which motions occur during the rocking motion of the carriage 80.

The new mechanism for folding the box-like form into the diamond form is as follows: Arranged on the upper part of the carriage 80 are two side plates 10 and 11, secured to shafts 12 and 13 in brackets 14 and 15, which are fastened to the carriage. On the shafts 12 and 13 are two bevel sector-pinions 16 and 17, meshing into bevel sector-arms 20 and 21. These arms are fixed to a cross-shaft 18, and from the arm 21 a stud 22 projects and is pivoted to the connecting-rod 23, the other end of which is pivoted by the pin 24 to the side lever 25, which is pivoted to a stud 26 in the carriage 80. The lower end of the lever 25 is marked 27, and has a projection which enters a cam-groove 28 of the cam 29, which is fixed to the shaft 81. The side plates 10 and 11 receive the proper oscillating motion simultaneously from the cam 29 at suitable intervals, thus driving the plates through an arc of about ninety degrees from the position shown in Figs. 11, 12, and 13 to that shown in Figs. 15 and 16.

The cylinder 32 is secured to a shaft 33, which revolves in bearings 45 and 46, which are part of the uprights 34 and 35. The shaft 33 is driven by means of a gear 36, which derives motion from a gear 37 on the shaft 81, and the timing is so arranged that the cylinder 32 makes one revolution to two oscillations of the carriage 80. The object of this is to work two sets of gripping devices on the cylinder; but one set may be employed, if preferred, and the cylinder may be correspondingly reduced in diameter.

The new mechanism for delivering the diamond-fold blank to the cylinder is as follows: Fastened to the uprights 34 and 35 are two rods 41 and 42, which hold two plates 43 and 44 over the cylinder. Upon the projecting hubs 45 and 46 of the uprights are fixed two cams 49 and 48, respectively. The cam 49 is provided with the cam-groove 50, which works the arms 51 and 52, the shafts 53 and 54, and the lower grippers 55 and 56. These shafts are on opposite sides of the cylinder, and these grippers have bifurcated ends 57, which rise beyond the surface of the cylinder and fall back even with that surface. The cam 48 is provided with the opposite cam ends 58 and 59, the contours of which ends are shown by dotted lines in Fig. 12, and those cam ends alternately lift the arms 60 and 61 against the resistance of the springs 62 and 63, respectively, and thus work the shafts 64 and 65, together with the grippers 66 and 67, fixed thereto, and these springs press the ends 68 of the upper grippers 66 and 67 down upon the ends 57 of the lower grippers 55 and 56, whenever neither of the said cam-ends is lifting the upper grippers.

The operation of this machine is as follows: As bag-blank 1, having been fed into the upper part of the carriage 80 and gripped by the presser-plate 98, and the two pairs of blades 134 and 136 and 133 and 137 having entered the tuck-recesses 2 and 3 of the blank, as shown in Figs. 11 and 12, and the two blades 136 and 137 having been oscillated about one hundred and eighty degrees, as shown in Fig. 14, a box-like form 8 will have been folded up in

the same manner as that shown in said Letters Patent No. 361,951. The side plates 10 and 11 then fold down from the position shown in Fig. 14 to that of Figs. 15 and 16, and thus fold the box-like form 8 into the diamond form 9. The front end of the diamond form is then carried forward by the carriage 80 and inserted between the ends 57 and 68 of the grippers 55 and 56, and then the upper gripper 68 is forced by the spring 62 down upon the forward end of the diamond form, thus gripping the bag-blank firmly, as shown in Figs. 15 and 16. The various blades attached to the carriage then release the bag-blank, the side plates 10 and 11 rise to their upper position, and the bag-blank is drawn forward upon the cylinder 32. Meanwhile the lower gripper 55, followed by the upper gripper 66, is dropped to the level of the cylinder-surface, so that the bag may lie upon it, and the diamond-folded bag-blank is drawn by the grippers 55 and 66 under plates 43 and 44, to preserve its folded flatness and to aid in holding it down upon the cylinder. Thus delivered to the cylinder the bag-blank may be operated upon, as in said Letters Patent No. 361,951.

A modified form of gearing for working the side plates 10 and 11 is shown in Figs. 17 and 18. Here the side plates are attached to shafts 12 and 13, rocking in brackets 14 and 15, and secured to the shafts 12 and 13 are sector-pinions 90 and 91, meshing into racks 88 and 89, sliding in brackets 14 and 15. Meshing at right angles into these racks are sector-gears 85 and 86, fastened to a cross shaft 18, to which an arm 87 is also secured. At the end of this arm, on a pin 92, is attached the connecting-rod 23, which derives motion in a manner similar to that before described. Other methods of connecting the parts together may also be employed.

A modified form of side plates is shown in Figs. 19 to 22. Here the two side plates 158 and 159 are hung over the top of the carriage 80, the plates being supported and swung on studs 160 and 161, these latter being fastened in brackets 162 and 163, which are projections of the carriage 80. Fastened to the side plates 158 and 159 are two bevel-sectors 164 and 165, which engage with sector-arms 166 and 167, which are secured to a cross-shaft 168, which is also supported in bearings in the brackets 162 and 163. Oscillating motion is given to the plates through the sectors by means of a rod 169 on the stud 170, which stud is driven into the sector 167. The rod 169 derives its motion in the same manner and at the same time that the rod 23 does. In Figs. 19 and 20 the bag is shown folded as far as the box-like form 8, the side plates 158 and 159 being swung open, and in Figs. 21 and 22 the side plates are swung in, converting the box-like form 8 into the diamond form 9.

We claim as our joint invention—

1. The combination of the rocking carriage 80, the side plates 10 and 11, rocking toward each other above that carriage and at right angles to the rocking thereof and the cam 29, and mechanism, substantially as described, between that cam and those side plates and operating to work the latter, all substantially as described.

2. The combination, in a bag-machine, of the folding-bed thereof, and a pair of grippers pivoted in a recess in the surface of that bed and rising from that surface to clasp a bag-blank some distance above it, and then falling to that surface to carry that blank thereto, all substantially as described and shown.

3. The combination of the cylinder 32, the pair of grippers 55 and 66, rocking in a recess in the periphery of that cylinder upon the shafts 53 and 64, the arms 51 and 60, rocking those shafts, and the cams 49 and 48 and the spring 62, working those arms, all substantially as described.

4. The combination of the cylinder 32, the pair of grippers 55 and 66, rocking in a recess in the periphery of that cylinder upon the shafts 53 and 64, the arms 51 and 60, rocking those shafts, the cams 49 and 48 and the spring 62, working those arms, and the plates 43 and 44, co-operating with the grippers 55 and 66 to draw and hold a bag-blank down upon the periphery of the cylinder, all substantially as described.

Hartford, Connecticut, December 6, 1888.

WILLIAM A. LORENZ.
EDWARD E. CLAUSSEN.

Witnesses:
ALBERT H. WALKER
JNO. H. WHITE.

(No. Model.) 4 Sheets—Sheet 1

W. A. LORENZ & W. H. HONISS.

PAPER BAG MACHINE.

No. 410,842. Patented Sept. 10, 1889.

Fig. 1

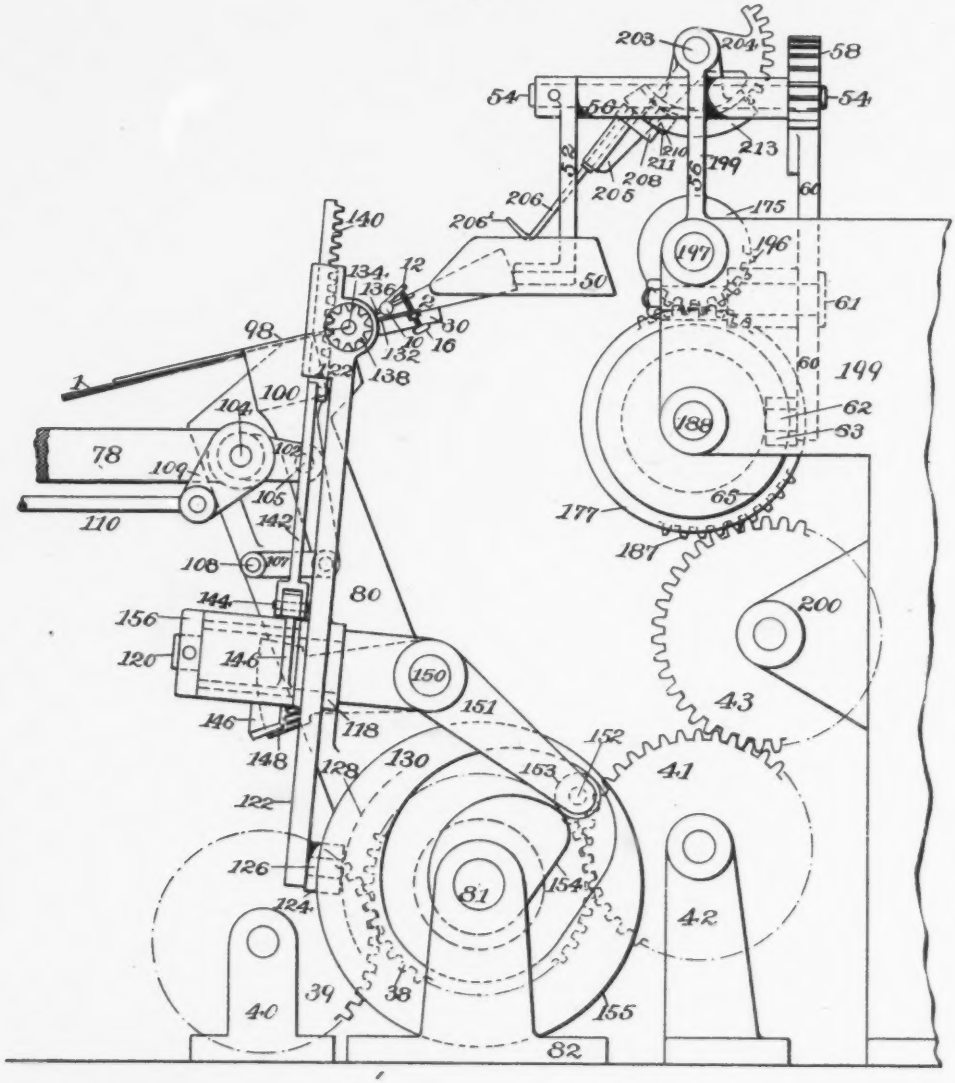

Witnesses:

Jno. R. White

Harry R. Williams

Inventors:

William A. Lorenz

William H. Honiss

by Albert H. Walker Atty

(No Model.) 4 Sheets—Sheet 2.

W. A. LORENZ & W. H. HONISS.

PAPER BAG MACHINE.

No. 410,842. Patented Sept. 10, 1889.

Fig. 2

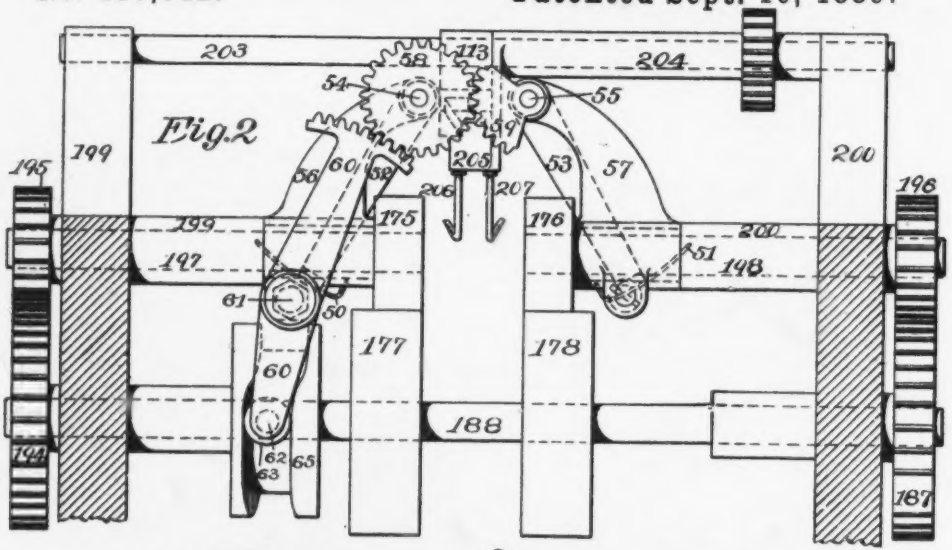

Fig. 3

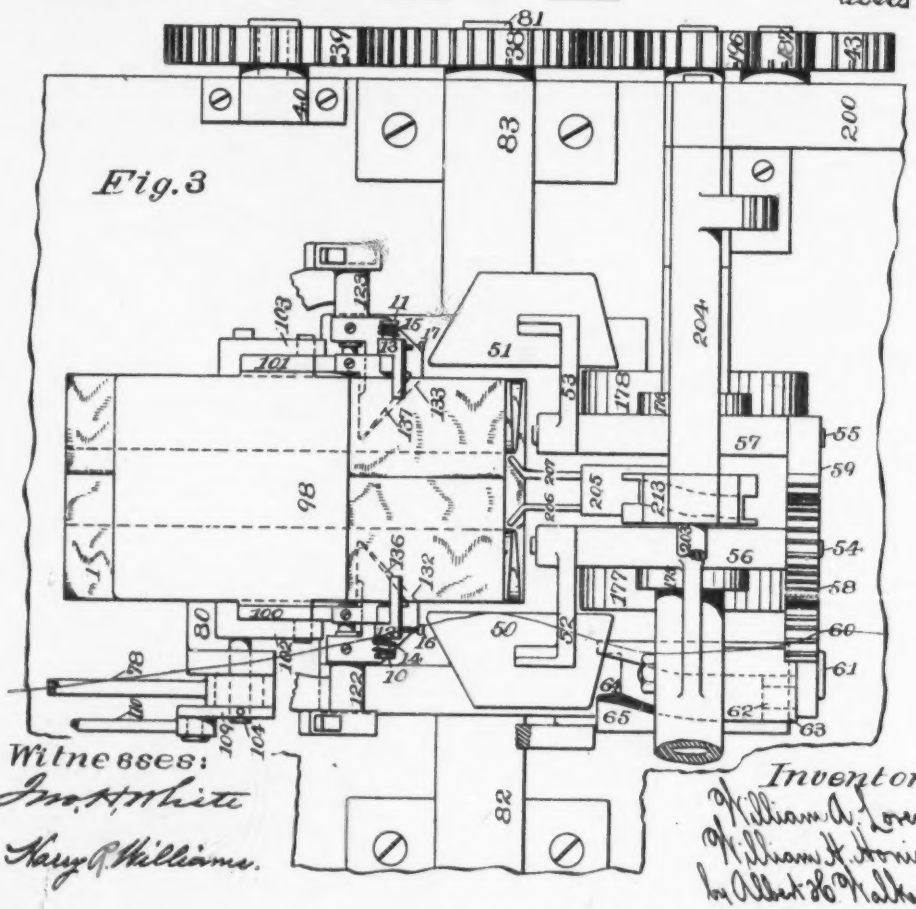

Witnesses:
Jno. A. White
Harry P. Williams.

Inventors:
William A. Lorenz
William H. Honiss
by Albert G. Walker Atty

(No Model.) 4 Sheets—Sheet 3.

W. A. LORENZ & W. H. HONISS.

PAPER BAG MACHINE.

No. 410,842. Patented Sept. 10, 1889.

Fig. 4

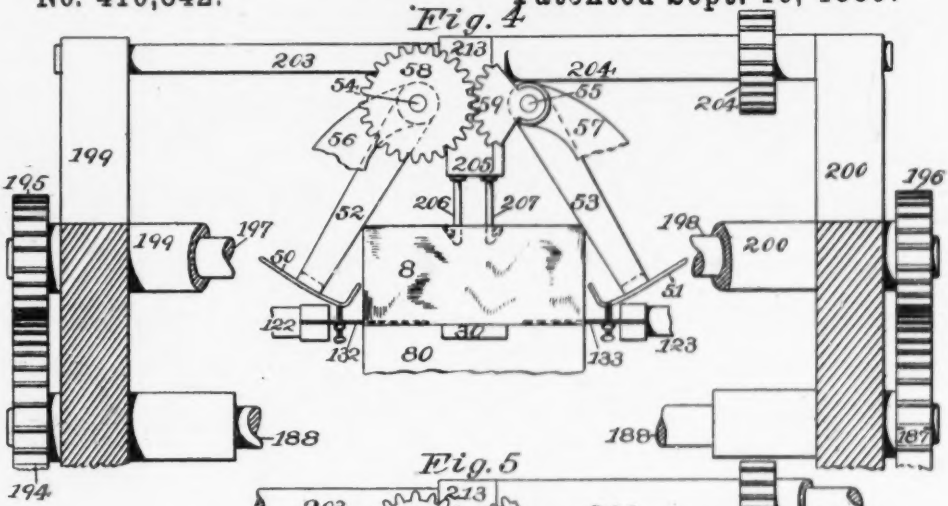

Fig. 5

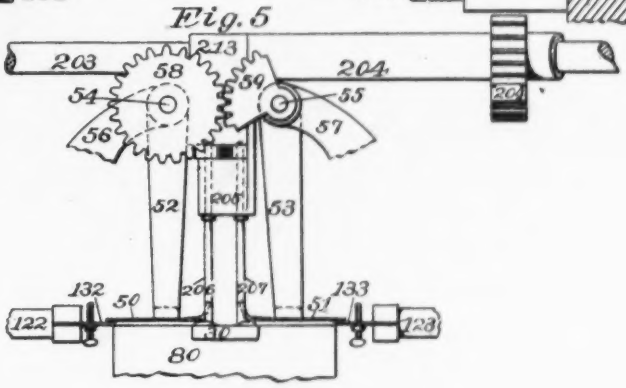

Fig. 6

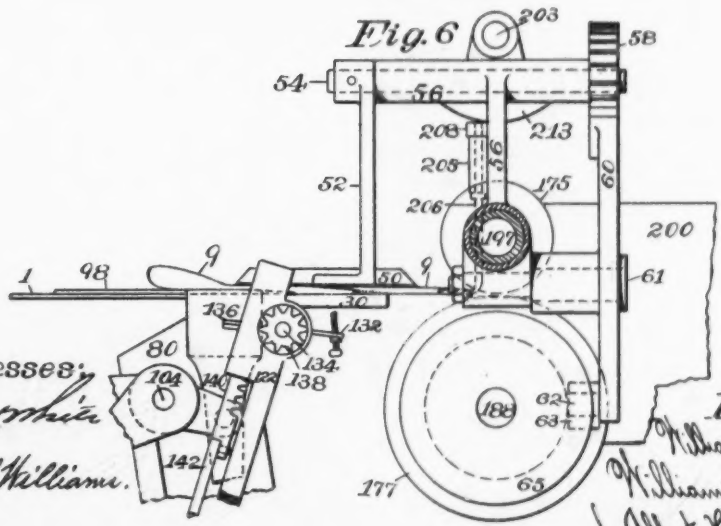

Witnesses:

Jno. H. White

Harry R. Williams.

Inventors

William A. Lorenz

William H. Honiss

by Albert H. Walker Atty

(No Model.) 4 Sheets—Sheet 4.

W. A. LORENZ & W. H. HONISS.

PAPER BAG MACHINE.

No. 410,842. Patented Sept. 10, 1889.

Fig. 7

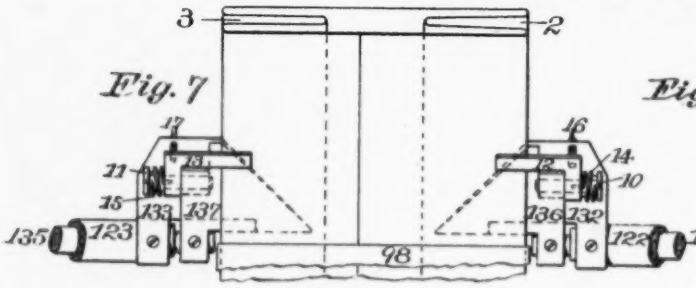

Fig. 8

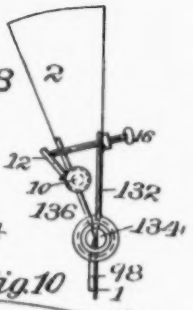

Fig. 9

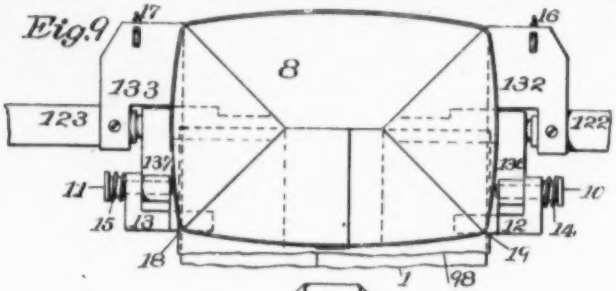

Fig. 10

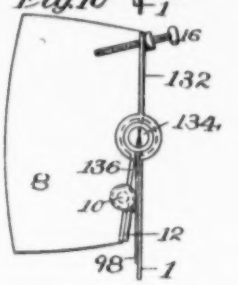

Fig. 11

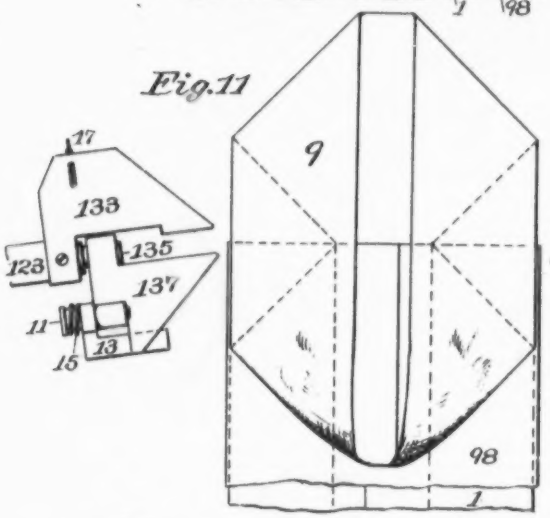

Fig. 12

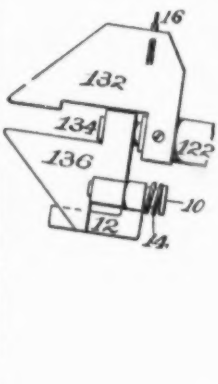

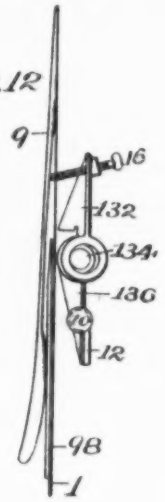

Fig. 13

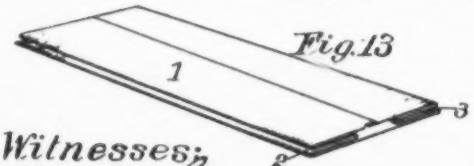

Fig. 14

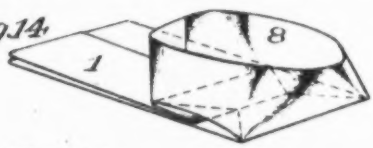

Fig. 15

Witnesses:
Jno. W. White
Harry P. Williams.

Inventors:
W. A. Lorenz
W. H. Honiss
by Albert G. Walker Attys

UNITED STATES PATENT OFFICE.

WILLIAM A. LORENZ AND WILLIAM H. HONISS, OF HARTFORD, CONNECTICUT, ASSIGNORS TO FELIX W. LEINBACH AND CLARENCE A. WOLLE, OF BETHLEHEM, PENNSYLVANIA.

PAPER-BAG MACHINE.

SPECIFICATION forming part of Letters Patent No. 410,842, dated September 10, 1889.

Application filed January 18, 1889. Serial No. 296,734. (No model.)

To all whom it may concern:

Be it known that we, WILLIAM A. LORENZ and WILLIAM H. HONISS, of Hartford, Connecticut, have jointly invented certain new and useful Improvements in Paper-Bag Machines, of which the following description and claims constitute the specification, and which is illustrated by the accompanying four sheets of drawings.

These improvements consist of certain gripping devices attached to the box-blades of such a paper-bag machine as that shown in our Letters Patent, No. 361,951, of April 26, 1887; and it consists, also, in certain mechanism for folding the "box-like" form of the bag-blank down into the "diamond" form thereof.

Figure 1 of the present drawings is a side view of that part of the paper-bag machine which contains the present improvements. Fig. 2 is a view of the right-hand end of the upper part of what is shown in Fig. 1. Fig. 3 is a plan view of what is shown in Fig. 1. Fig. 4 is a view of parts of what is indicated in Fig. 2, with other parts broken away. Fig. 5 is a view of parts of what is shown in Fig. 4 in another stage of movement. Fig. 6 is a view of parts of Fig. 1, in a changed position, however. Figs. 7 and 8 are enlarged plan and side views of the new gripping devices and of the parts with which they are immediately connected. Figs. 9 and 10 present another stage of movement of what is shown in Figs. 7 and 8. Figs. 11 and 12 present still another stage of movement of the same parts. Fig. 13 is a perspective view of a length of tucked paper tube. Fig. 14 shows the tucked paper tube of Fig. 13 with one end opened out into the box-like form. Fig. 15 shows the blank of Fig. 14 with the box-like form folded down and into the diamond form.

To promote clearness many of the teeth are omitted from the gears 38, 39, 41, 43, 187, and 196, wherever in the drawings those gears appear in side view.

The numeral 1 indicates a bag-blank severed from a continuous tucked paper tube, and having two inwardly-projecting tucks 2 and 3.

The numeral 8 indicates the box-like form and the numeral 9 indicates the diamond form, through both of which forms the blank 1 passes in the process of being made into a paper bag.

In this machine, the blank 1 is delivered to a traveling folding-bed and there transformed first into the box-like form, and then into the diamond form, and is then delivered to a pair of gripping-rolls that pass it on to other folding mechanisms, which are shown in said Letters Patent No. 361,951, but are not shown in the present specification. The traveling folding-bed is made in the form of the rocking carriage 80, oscillated by a crank and connecting-rod, and it has attached thereto a presser-plate mechanism, and a tuck-entering mechanism, and a box-blade-turning mechanism. These mechanisms are identical with those shown and described in said Letters Patent No. 361,951, and their various parts are numbered in the drawings of this specification to correspond with their numbers in the drawings of those Letters Patent.

The new gripping devices are pivoted upon the studs 10 and 11, which are fixed to the box-blades 136 and 137, and those devices are themselves numbered 12 and 13, and they are held in contact with their respective box-blades 136 and 137 by the springs 14 and 15, except when they collide with the adjustable studs 16 and 17, respectively, in which case they are forced away from contact with their respective box-blades. When the tuck-levers 122 and 123 move inward, as described in said Letters Patent No. 361,951, the box-blades 136 and 137 are folded over upon the tuck-blades 132 and 133, as shown in that patent; but the new grippers 12 and 13 are forced by the adjustable studs 16 and 17 to turn upward away from the box-blades 136 and 137, and are thus caused to pass above the upper ply of the blank, as shown in Figs. 3, 7, and 8 of the present drawings. The box-blades 136 and 137 then turn over to the positions shown in Figs. 9 and 10, thus folding the blank of Fig. 13 into the box-like form of Fig. 14; and during this turning the grippers 12 and 13 are carried out of contact with the studs 16 and

17, and are forced by the springs 14 and 15 to close down upon the parts of the blank which lie between them and the box-blades 136 and 137, respectively. The function of the grippers 12 and 13 consists in preventing the blank from slipping along the diagonal edges of the box-blades 136 and 137 during their folding operation. After the blank has been folded into the box-like form of Fig. 14 it is drawn down toward the diamond form of Fig. 15 by the sweeper-shafts 206 and 207, whose feet 206′ and 207′ enter the box 8 and draw the forward wall thereof down, so as to constitute the forward end of the diamond form 9, and then draw that forward end into the bite of the gripping-rolls 175, 176, 177, and 178, in the manner described in the said Letters Patent No. 361,951.

The new side plates 50 and 51 are attached by means of the arms 52 and 53 to the shafts 54 and 55, respectively, which shafts oscillate in brackets 56 and 57, respectively, and which brackets are respectively supported by the main brackets 199 and 200. The gear 58 and the sector 59 are fixed to the shafts 54 and 55, respectively, and mesh together, while the gear 58 also meshes with the sector-lever 60, the fulcrum of which lever is the stud 61 on the bracket 56, and the power end of which lever is provided with the stud 62 and the roll 63, running in the cam-groove 64 of the cam 65. That cam derives motion from the shaft 188, and that motion is so timed that the side plates 50 and 51 are open, as shown in Figs. 1, 2, 3, and 4, until the blank is folded into the box-like form, when the side plates are swung together, as shown in Figs. 5 and 6, and thus co-operate with the sweeper-shafts 206 and 207 in folding the box-like form into the diamond form.

We claim as our joint invention—

1. The combination of the tuck-blades 132 and 133, the studs 16 and 17, the box-blades 136 and 137, provided with the studs 10 and 11, respectively, and the grippers 12 and 13, provided with the springs 14 and 15, respectively, all combined and operating together substantially as described.

2. The combination of the swinging side plates 50 and 51, attached by means of the arms 52 and 53 to the shafts 54 and 55, respectively, the gear 58, and the sector 59, respectively fixed to the shafts 54 and 55, the sector-lever 60, meshing with the gear 58, and the cam 65, working that lever, all substantially as described.

3. The combination of the side plates 50 and 51, reciprocating toward and from each other crosswise of the bag-blank, with the two sweeper-shafts 206 and 207, reciprocating side by side lengthwise of the bag-blank, all substantially as described.

WILLIAM A. LORENZ.
WILLIAM H. HONISS.

Witnesses for William A. Lorenz:
ALBERT H. WALKER,
JNO. H. WHITE.
Witnesses for William H. Honiss:
EDWARD R. FRICKER,
PERCY K. WOODWARD.

(No Model.) 7 Sheets—Sheet 1.

E. E. CLAUSSEN & G. MORTSON.

PAPER BAG MACHINE.

No. 411,544. Patented Sept. 24, 1889.

Fig. 1

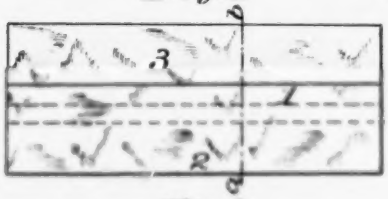

Fig. 3

Fig. 7

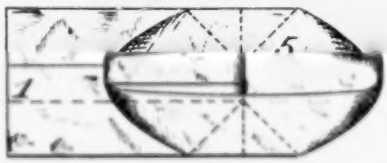

Fig. 2

Fig. 8

Fig. 4.

Fig. 5

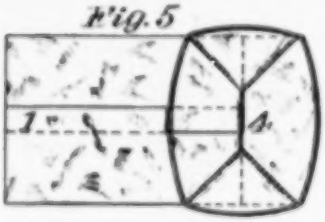

Fig. 9

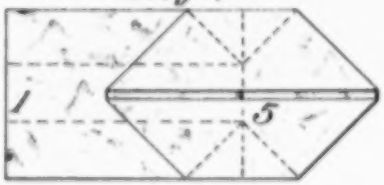

Fig. 6

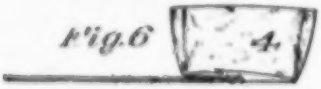

Fig. 10

Fig. 19

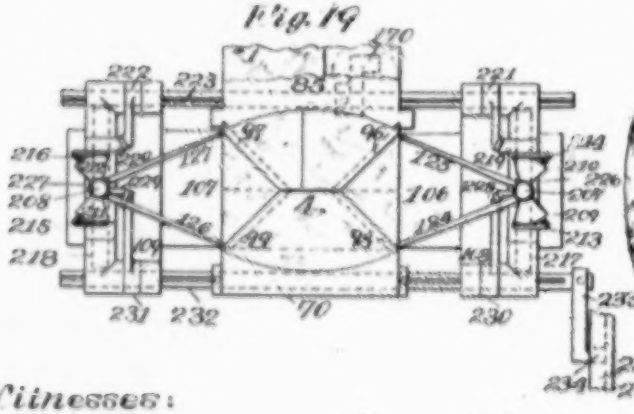

Fig. 20

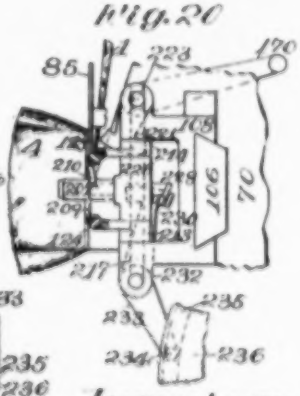

Witnesses:

Harry R. Williams.

Phoebe A. Phelps.

Inventors:

Edward E. Claussen and George Mortson

by Albert H. Walker Attorney

(No Model.) 7 Sheets—Sheet 2.

E. E. CLAUSSEN & G. MORTSON.

PAPER BAG MACHINE.

No. 411,544. Patented Sept. 24, 1889.

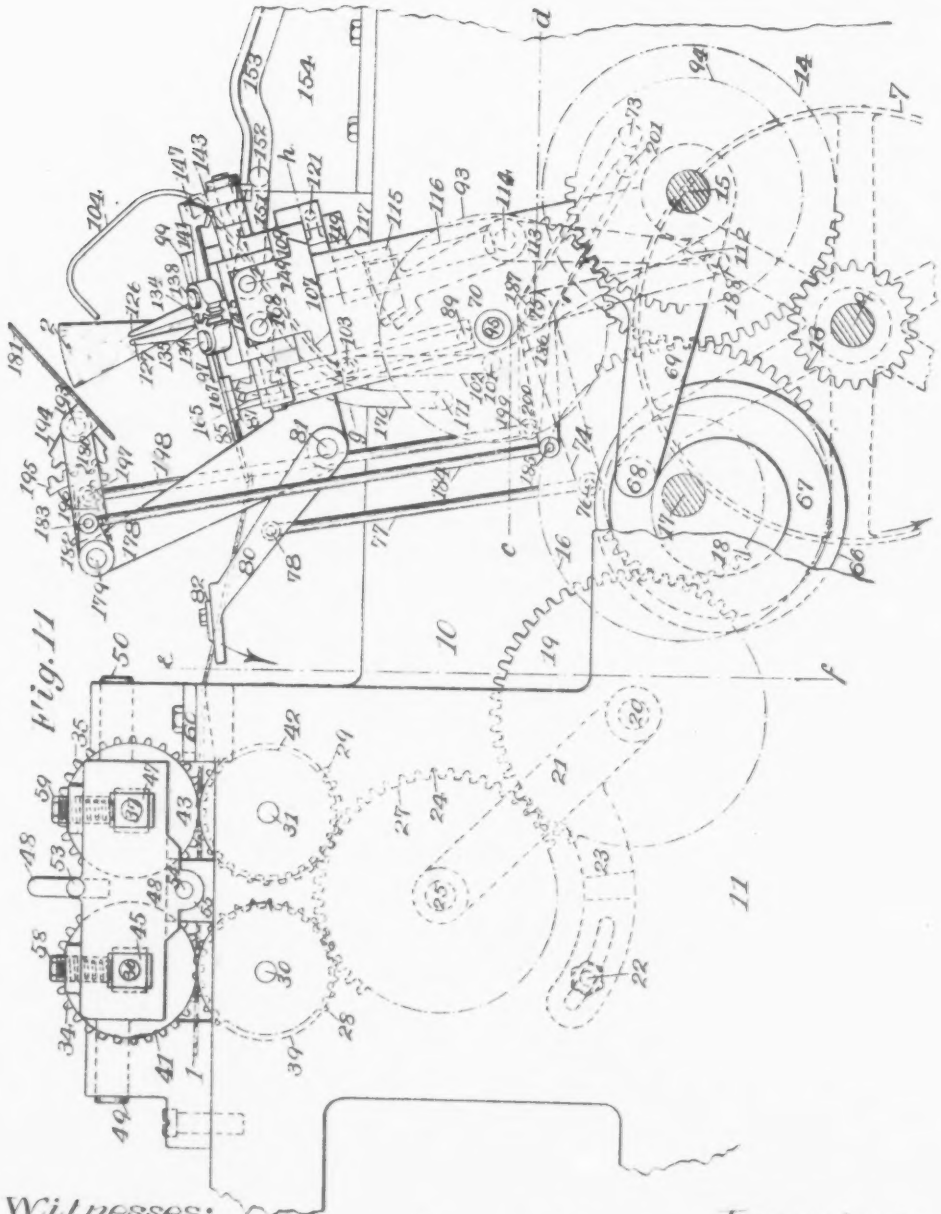

Fig. 11

Witnesses:
Harry R. Williams.
Phebe A. Phelps.

Inventors:
Edward E. Claussen & Geo. Mortson.
by Albert H. Walker Atty

(No Model.) 7 Sheets—Sheet 3.

E. E. CLAUSSEN & G. MORTSON.

PAPER BAG MACHINE.

No. 411,544. Patented Sept. 24, 1889.

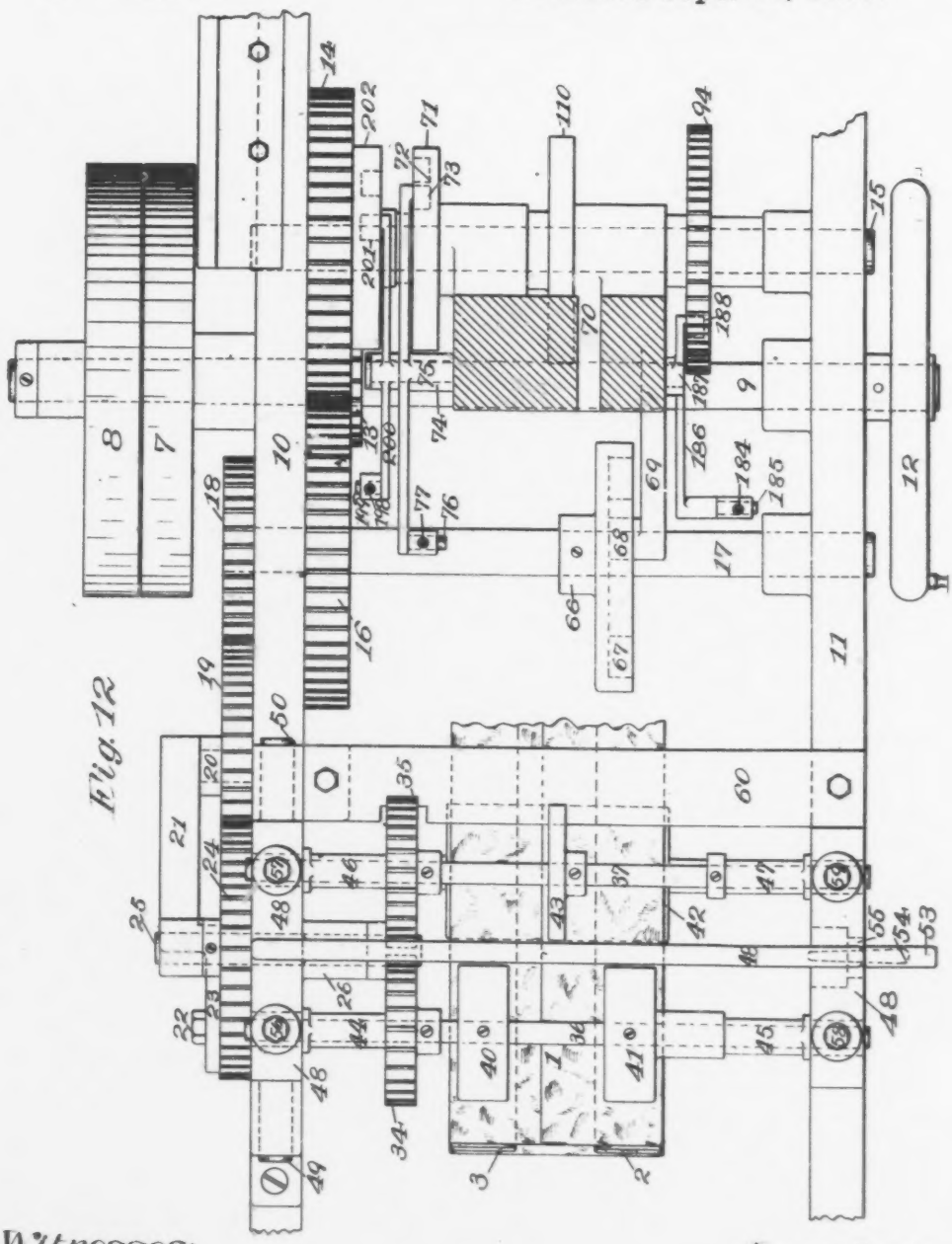

Fig. 12

Witnesses:
Harry R. Williams.
Phoebe A. Phelps.

Inventors:
Edward E. Claussen. Geo. Mortson
by Albert H. Walker, Atty

(No Model.) 7 Sheets—Sheet 4.

E. E. CLAUSSEN & G. MORTSON.

PAPER BAG MACHINE.

No. 411,544. Patented Sept. 24, 1889.

Fig. 13

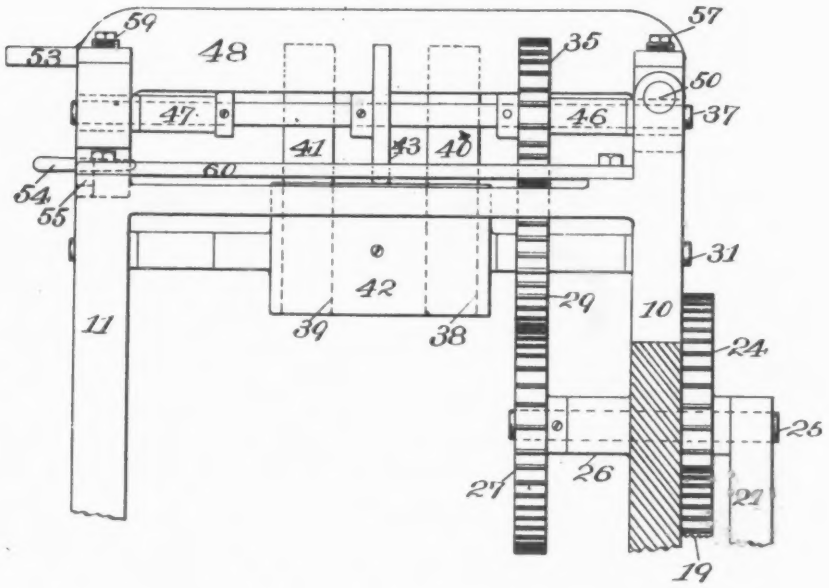

Fig. 14.

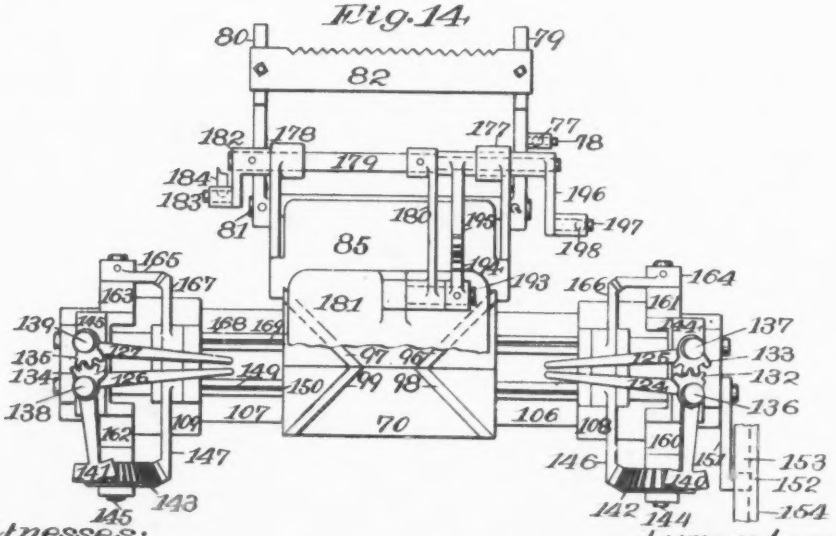

Witnesses:

Harry R. Williams.

Phoebe A. Phelps.

Inventors:

Edward E. Claussen. George Mortson.

by Albert H. Walker Atty

(No Model.) 7 Sheets—Sheet 5.

E. E. CLAUSSEN & G. MORTSON.

PAPER BAG MACHINE.

No. 411,544. Patented Sept. 24, 1889.

Fig. 15

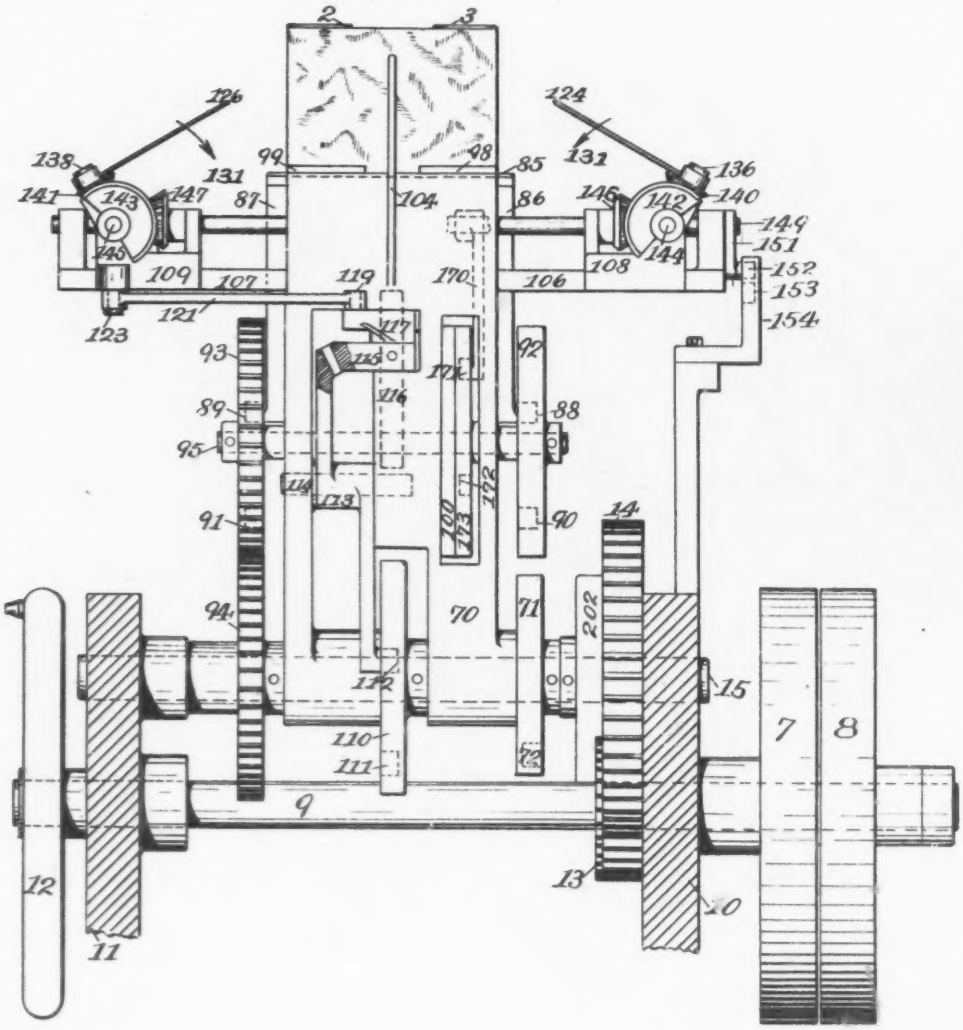

Witnesses:

Harry R. Williams.

Phoebe A. Phelps.

Inventors:

Edward E. Claussen and George Mortson.

by Albert H. Walker Atty

(No Model.) 7 Sheets—Sheet 6.

E. E. CLAUSSEN & G. MORTSON.

PAPER BAG MACHINE.

No. 411,544. Patented Sept. 24, 1889.

Fig. 16

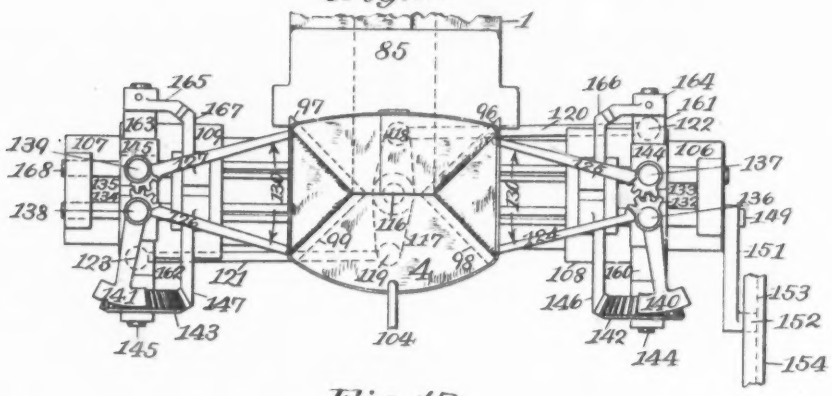

Fig. 17

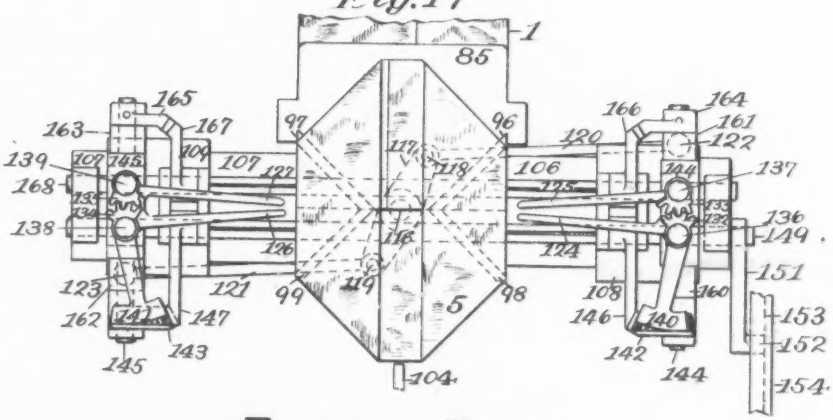

Fig. 18

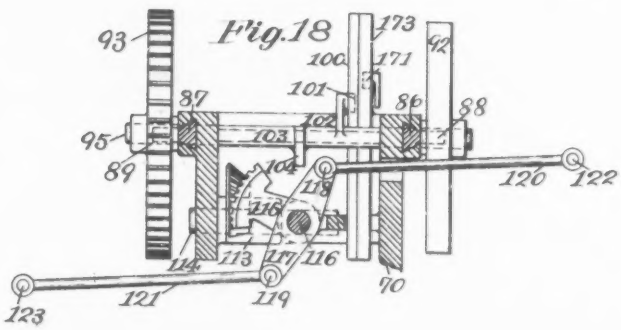

Witnesses:

Harry R. Williams.

Phoebe A. Phelps.

Inventors:

Edward E. Claussen & Geo. Mortson.

by Albert H. Walker. Attn

(No Model.) 7 Sheets—Sheet 7.

E. E. CLAUSSEN & G. MORTSON.

PAPER BAG MACHINE.

No. 411,544. Patented Sept. 24, 1889.

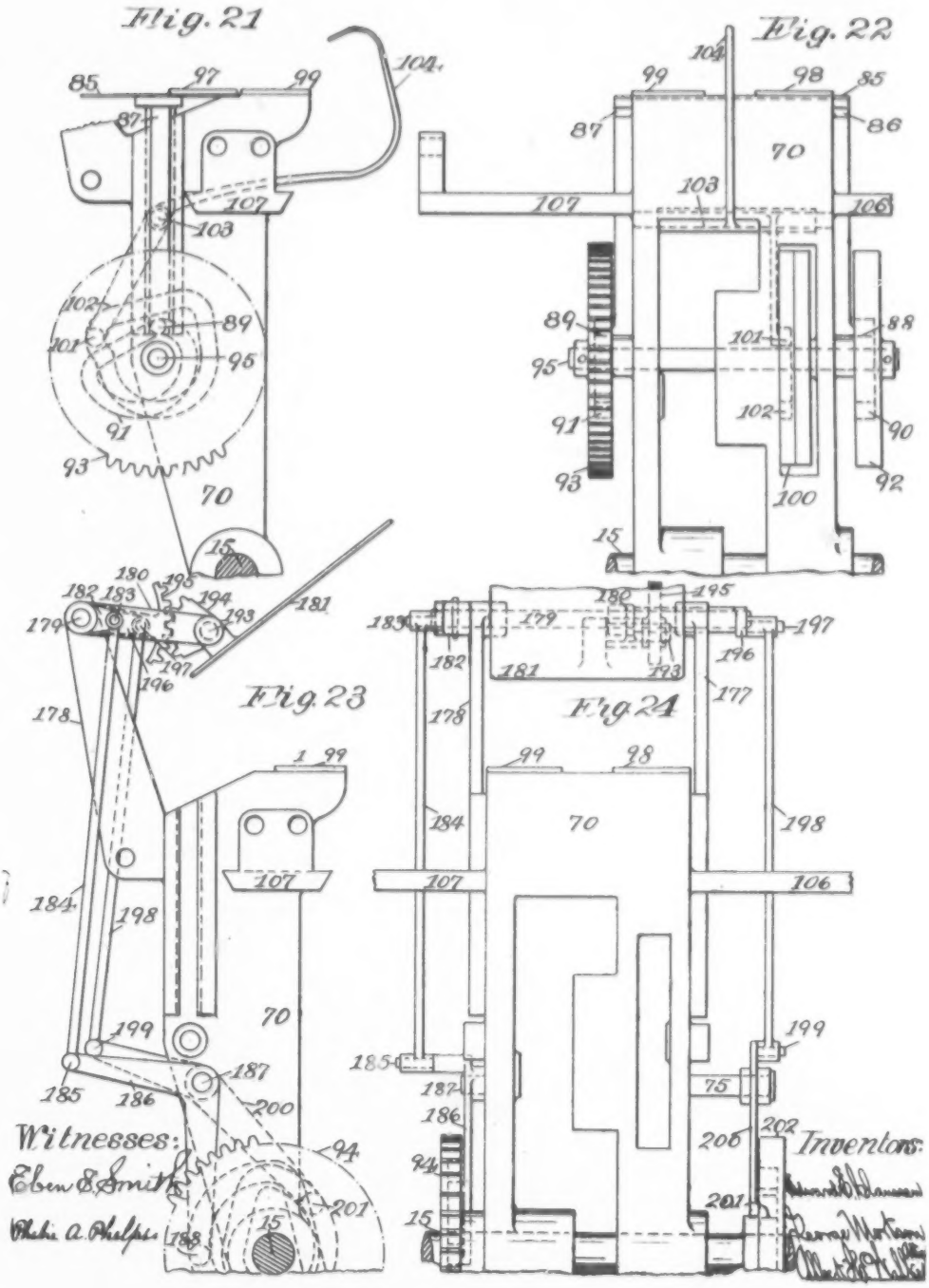

Witnesses:
Eben E. Smith
Phebe A. Phelps

Inventors:
Edward E. Claussen
George Mortson
Mart. J. Phelps

UNITED STATES PATENT OFFICE.

EDWARD E. CLAUSSEN, OF HARTFORD, AND GEORGE MORTSON, OF BRIDGEPORT, CONNECTICUT.

PAPER-BAG MACHINE.

SPECIFICATION forming part of Letters Patent No. 411,544, dated September 24, 1889.

Application filed February 18, 1889. Serial No. 300,333. (No model.)

To all whom it may concern:

Be it known that we, EDWARD E. CLAUSSEN, of Hartford, and GEORGE MORTSON, of Bridgeport, Connecticut, have jointly invented a certain new and useful Paper-Bag Machine, of which the following description and claims constitute the specification, and which is illustrated by the accompanying seven sheets of drawings.

This machine manufactures continuous tucked-paper tubing into tucked-paper tubes like that illustrated in Figures 1, 2, and 3 of the drawings and then into paper-bag blanks which have one end folded down into the diamond shape shown in Figs. 9 and 10 of the drawings, and which blanks may be manufactured into square-bottom paper bags by means of machinery shown in Letters Patent of the United States No. 361,951, of April 26, 1887, or by means of other machinery already well-known in the art. This diamond-folding machine differs materially from all other machines and plans known to us for performing that function.

Fig. 1 of the drawings is a plan view, while Fig. 2 is a side view, and Fig. 3 is an end view, of a tucked-paper tube suitable to be made by this machine into a diamond-bag blank and then made by other machinery into a square-bottom paper bag. Fig. 4 is a side view of the blank of Figs. 1, 2, and 3 after its forward portion has been turned upward on the line *a b* of Fig. 1 to a position substantially at right angles to the rearward portion of that blank. Figs. 5 and 6 are a plan and side view, respectively, of the blank of Fig. 4 after its upturned portion has been opened out into a box-like form. Figs. 7 and 8 are a plan and a side view, respectively, of the blank of Figs. 5 and 6 when the box-like form is partly folded down into the diamond form, which is the product of this machine, and which is shown in the side and plan views of Figs. 9 and 10. Fig. 11 is a side view of our machine, that part of a paper-bag machine which manufactures a roll of paper into continuous tucked-paper tubing being broken away from the left-hand end of what is shown in Fig. 11, while that part of a paper-bag machine which manufactures a diamond-formed blank like that of Figs. 9 and 10 into a square-bottom paper bag is broken away and removed from the right-hand end of what is shown in Fig. 11. Fig. 12 is a plan view of the left-hand part of what is shown in Fig. 11, and a horizontal section on the line *c d* of Fig. 11 of the right-hand part of what is shown in that figure. Fig. 13 is a vertical section looking to the left from the line *e f* of Fig. 11. Fig. 14 is a plan view of the upper part of the right-hand part of Fig. 11. Fig. 15 is an elevation of the right-hand end of what is shown in Fig. 11. Fig. 16 is a plan view of the principal mechanism shown in Fig. 14, but showing that mechanism in the advanced position it occupies when it has completed the box-like form of Figs. 5 and 6. Fig. 17 shows the mechanism of Fig. 16 when the diamond form of Figs. 9 and 10 is completed. Fig. 18 is a nearly horizontal section on the line *g h* of Fig. 11. Figs. 19 and 20 are plan and side views of a modified form of the mechanism shown in Fig. 16. Fig. 21 is a side view, and Fig. 22 is a front view, of certain parts of the mechanism less clearly shown in Figs. 11 and 15. Figs. 23 and 24 are a side view and a front view, respectively, of certain other parts of the mechanism less clearly shown in Figs. 11 and 14.

To promote clearness, the gears 14, 16, 18, 19, 24, 27, 28, 29, 34, 35, 93, and 94 have teeth omitted, and are thus not shown in full in side view, and the cam-grooves of all the cams have also been omitted in side view for the same reason.

The numeral 1 indicates a section of tucked-paper tubing severed from a continuous tucked-paper tube and having two inwardly-projecting tucks 2 and 3 extending the entire length thereof, as shown in Figs. 1, 2, and 3. The box-like form into which this machine first folds the tucked-paper tube 1 is indicated by the numeral 4, and the diamond form into which this machine folds the box-like form is indicated by the numeral 5.

The numeral 7 represents the driving-pulley, by which power is communicated to this machine, and a loose pulley 8 runs adjacent thereto on the shaft 9, which revolves in bearings in the frame-pieces 10 and 11, and which

carries the hand-wheel 12 on its end opposite to which the pulley 7 is keyed. The gear 13 is keyed to the shaft 9 and meshes into the gear 14 on the shaft 15, and which latter gear meshes into the gear 16 on the shaft 17, which shaft also has its bearings in the frame-pieces 10 and 11. The gear 18 is also keyed to the shaft 17 and meshes into the gear 19, which is pivoted by the stud 20 to the lower end of the swinging arm 21, which arm, by means of the bolt 22 passing through the curved slot in the segmental arm 23, which projects therefrom, is adjustable to various positions to admit of using gears of various sizes, as the gear 18.

The gear 19 meshes into the gear 24, which is keyed to the shaft 25, which has a single length bearing in the hub 26 of the frame-piece 10, and the inner end of that shaft carries also the fixed gear 27, which meshes into gears 28 and 29, which are keyed to the shafts 30 and 31, respectively, and which respectively mesh into the gears 34 and 35, which are keyed to the shafts 36 and 37, respectively. The drawing-rolls 38 and 39 are fixed to the shaft 30, and the drawing-rolls 40 and 41 are fixed to the shaft 36. The pressing-rolls 42 and 43 are fixed to the shafts 31 and 37, respectively. The shafts 36 and 37 have bearings in the boxes 44, 45, 46, and 47, respectively, and those boxes are carried in the four extremities of a swivel-casing 48, which turns on trunnions 49 and 50. The handle 53 is integral with the swivel-casing 48. The taper pin 54, when driven through the lug 55 of the casing 48 into an adjacent hole in the frame-piece 11, holds one end of that casing firmly to that frame-piece, while the other end of that casing is held firmly to the frame-piece 10 by the trunnions 49 and 50. When the taper pin 54 is removed, the operative is enabled by means of the handle 53 to throw the casing 54 upward upon its trunnions 49 and 50, and thus to thread the continuous paper tube, which comes from the left of the machine, more quickly into this machine than he otherwise could.

The upper drawing-rolls are pressed down upon the lower drawing-rolls, and the upper pressing-roll is pressed down upon the lower pressing-roll by means of springs, and that pressure is adjusted by means of the screws 56, 57, 58, and 59. The bar 60 firmly connects the frame-pieces 10 and 11.

The cam 66 is fixed to the shaft 17, and is provided with the cam-groove 67, in which groove there runs the projection 68 of the arm 69, and which arm is integral with the carriage 70 and imparts thereto a rocking motion on the shaft 15 as a pivot. The cam 71 is fixed to the shaft 15, and is provided with the cam-groove 72, in which runs the projection 73 of the lever 74, which lever is pivoted on the stud 75, and has its working end pivoted by the stud 76 to the connecting-rod 77, the upper end of which rod is pivoted by the stud 78 to the arm 79. That arm and the corresponding arm 80 have their lower ends fixed to the shaft 81, so as to rock therewith, while their upper ends carry the serrated edged knife 82. The stud 75 and the shaft 81 have their bearings in the carriage 70 and participate in the rocking thereof.

The presser-plate 85 is fastened to the upper ends of the arms 86 and 87, which arms slide up and down in grooves on the opposite sides of the carriage 70, and their lower ends are provided with the projections 88 and 89, respectively, which run in the cam-grooves 90 and 91 of the cams 92 and 93, respectively. Gear-teeth are cut upon the periphery of the cam 93, and those teeth mesh with the gear 94, which is keyed to the shaft 15. The cams 92 and 93 are both keyed to the shaft 95, so that both receive identical motion from the gear 94 and transfer it, through the arms 86 and 87, to the presser-plate 85. Upon the upper side of the presser-plate 85 ledges 96 and 97 are fixed in positions diagonal to the presser-plate and at right angles to each other, and upon the upper side of the carriage, forward of the presser-plate, similar ledges 98 and 99 are fixed in positions diagonal to the carriage and at right angles to each other. The ledges 96 and 98 form a right angle when viewed from above, and the ledges 97 and 99 form another right angle when thus viewed. The inner apexes of those right angles point toward the longitudinal center of the machine, and are separated from each other by a distance substantially identical with that which separates the inner bends of the two tucks of the blank 1. The cam 100 is fixed to the shaft 95, and the projection 101 of the arm 102 runs in a cam-groove on the inside of that cam. That arm is fixed to a sleeve which rocks on the shaft 103, and which sleeve carries a long hook-like arm 104.

The carriage 70 has two oppositely and outwardly extending brackets 106 and 107 cast thereto, and upon which the slides 108 and 109, respectively, reciprocate. These slides receive motion toward and from each other from the cam 110 on the shaft 15, which cam is provided with the cam-groove 111 for the reception of the projection 112 of the lever 113, which is pivoted on the stud 114, and the upper end of which is a sector, which meshes into the sector 115, which is fixed to the upright shaft 116, which rocks in bearings in the center of the carriage. The rock-arm 117 is fixed at its center to the upper end of the shaft 116, and is provided at its ends with the studs 118 and 119, and is thereby pivoted to the inner ends of the connecting-rods 120 and 121, the outer ends of which rods are pivoted by the studs 122 and 123, respectively, to the slides 108 and 109.

On the upper side of the slide 108 the spreading fingers 124 and 125 are arranged and worked, while the spreading fingers 126 and 127 are similarly arranged and worked

upon the upper side of the slide 109. The fingers 124 and 125 are geared together by the sectors 132 and 133, which turn upon pivots 136 and 137, while the fingers 126 and 127 are geared together by the sectors 134 and 135, which are pivoted upon the studs 138 and 139, respectively. The sectors 140 and 141 are integral with the hubs of the sectors 132 and 134, respectively, and mesh with the bevel-pinions 142 and 143, respectively, which pinions are pivoted loosely on the ends of the swivels 144 and 145, respectively. The pinions 142 and 143 also mesh into the sectors 146 and 147, respectively, and those sectors are splined to the shaft 149, and that shaft is provided with the spline 150 and has its bearings in the brackets 106 and 107. One end of the shaft 149 carries the arm 151, the outer end of which is provided with the projection 152, which runs in the cam-groove 153 of the cam 154, which is fastened to the frame of the machine. The studs 136 and 137 are fastened to the swivel 144, and the studs 138 and 139 are fastened to the swivel 145, and those swivels have bearings in the lugs 160 and 161 and 162 and 163, respectively. The sector-pinions 164 and 165 are fastened to the rearward ends of the swivels 144 and 145, respectively, and they respectively mesh with the sectors 166 and 167, which sectors are splined to the shaft 168, which is provided with the spline 169. The arm 170 is fixed to the shaft 168 and its outer end is provided with the projection 171, which runs in the cam-groove 172 of the cam 173.

Extending upward from the rear of the carriage are the arms 177 and 178, and their upper ends carry the shaft 179, which carries the arm 180. The drop-plate 181 is pivoted to the forward end of the arm 180. The shaft 179 also carries the arm 182 outside of the arm 178, and the forward end of the arm 182 is pivoted by the stud 183 to the connecting-rod 184, and the lower end of that rod is pivoted by the stud 185 to the cam-arm 186, which turns on a pivot 187, and the lower end of which is provided with the projection 188, running in a cam-groove on the inside of the gear 94. The pivot 193 of the drop-plate 181 is fastened to the sector 194, which meshes into the sector 195, which swings loosely on the shaft 179 and carries the arm 196, the outer end of which is pivoted by the stud 197 to the outer end of the connecting-rod 198, the lower end of which is pivoted by the stud 199 to the cam-arm 200, which turns on the stud 75, and is provided with the projection 201, which runs in the cam-groove of the cam 202.

The mode of operation is as follows: The forward end of continuous tucked-paper tubing is drawn into the machine by the drawing-rolls 38 and 39 and 40 and 41, and thence passed between the pressing-rolls 42 and 43, and thence carried under the knife 82, and under the presser-plate 85, and over the upper face of the carriage 70 far enough to protrude in advance of the forward edge of the presser-plate 85 sufficiently to present enough of the paper tube to make the upturned part of the blank shown in Fig. 4. Then the presser-plate 85 descends upon the paper tubing and clasps it to the upper side of the carriage, and then the knife 82, which is adjustable upon the arms 79 and 80, so as to cut off blanks of different lengths, descends and severs a blank like that of Fig. 1 from the continuous tucked-paper tubing. Thereupon the end of the arm 104 rises from its position below the forward end of the blank 1 to its position shown in Fig. 11, and thus raises the forward portion of that blank into the upright position shown in Fig. 4, while the rearward portion of that blank is held in the horizontal position shown in that figure by the presser-plate 85. Then the pair of fingers 124 and 125 and the pair of fingers 126 and 127 are carried forward with the slides 108 and 109 from the positions shown in Fig. 15 till they enter the tucks 2 and 3 of the upright part of the blank of Fig. 4 about midway of the length of that upright part. Then the two pairs of fingers rock downward to a horizontal position extending to the inner bends of the tucks in the paper. Then the pairs of fingers are withdrawn from the tucks, and as they are withdrawn are opened, so that their inner ends follow paths nearly coincident with the adjacent outer sides of the ledges 96, 98, 97, and 99. This withdrawal presses and creases the paper which constitutes the tucks of the blank, and also the adjacent portion of the paper which constitutes the flat walls of the blank, on diagonal lines coincident with the outer edges of the four ledges, respectively, and thus draws the upright part of the blank of Fig. 4 down and out into the box-like form of the blank of Figs. 5 and 6. In the meantime the hook-like arm 104 moves downward and outward to make room for the forward part of the box-like form, and after that form is completed it moves upward again and its end passes over the forward wall of the box-like form, and then the arm descends and draws that wall down into the form of the forward end of the diamond form of Figs. 9 and 10 through the intermediate stage shown in Figs. 7 and 8, while the rear wall of the box-like form is swept and pressed down into the form of the rearward part of the diamond of Figs. 9 and 10 by means of the drop-plate 181. Thereupon the presser-plate 85 rises and releases the completed diamond blank of Figs. 9 and 10, and that blank may be withdrawn from the machine and be transferred by either of several well-known means to that part of a paper-bag machine which is adapted to make such a blank into a square-bottom paper bag.

The manner in which the various parts of this machine which immediately operate upon the paper blank are worked by the various gears, cams, and connections which give them motion will be apparent to all persons skilled in paper-bag machinery who attentively con-

sider the foregoing description of those gears, cams, and connections.

The modified form of mechanism shown in Figs. 19 and 20 differs from the corresponding mechanism which has been hereinbefore described principally in making each pair of spreading fingers turn upon one pivot instead of upon two. Here also three motions are imparted to the spreading fingers, as before—namely, the lateral oscillating motion with the slides 108 and 109, a spreading motion of the fingers, (shown by the arrow 130 in Fig. 16,) and a downward-swinging motion. (Shown by the arrows 131 in Fig. 15.) The first of these three motions is identical with that hereinbefore described in that behalf; but the spreading motion is now produced as follows: Pinion-sectors 209 210 211 212 are made integral with the spreading fingers 124, 125, 126, and 127, respectively, and they are made to respectively mesh with the sectors 213, 214, 215, and 216, respectively, which are fastened in pairs to the shafts 217 and 218, respectively. The sectors 219 and 220 are also respectively fastened to those shafts, and they mesh into the sectors 221 and 222, respectively, both of which are splined to the shaft 223, which shaft receives motion through the cam-arm 170 and the cam 173. The downward-swinging motion is now obtained, as follows: The studs 207 and 208 are tight in the sleeves 226 and 227, which swing loosely on the shafts 217 and 218, and are provided with the pinions 228 and 229, which mesh into the sectors 230 and 231, respectively, which are splined by a feather to the shaft 232, to which is fastened the cam-arm 233, which is provided with the projection 234, working in the groove 235 of the cam 236.

We claim as our invention—

1. The combination of the presser-plate 85, fastened to the upper ends of the vertical arms 86 and 87, and the cams 92 and 93, attached to the lower ends of those arms and alternately raising and lowering those arms and that presser-plate, all substantially as described.

2. The combination of a folding bed, as the upper surface of the carriage 70, provided with the diagonal ledges 98 and 99, the presser-plate 85, provided with the diagonal ledges 96 and 97, and two oppositely-disposed pairs of fingers 124 and 125 and 126 and 127, so constructed and worked as to press and crease a tucked-paper tube on diagonal lines coincident with the outer edges of the four ledges, and thus to draw part of that tube down and out into a box-like form, all substantially as described.

3. The combination of the rocking carriage 70, the slides 108 and 109 reciprocating thereon and carrying the two pairs of fingers 124 and 125 and 126 and 127 therewith, and the cam 110, and intermediate mechanism, substantially as described, working those slides, all substantially as described.

4. The combination of two pairs of fingers 124 and 125 and 126 and 127, a shaft provided with an arm rocked by a cam, and intermediate mechanism, substantially as described, between that shaft and those fingers, all combined and operating to spread each pair of fingers apart, substantially as described.

5. The combination of two pairs of fingers 124 and 125 and 126 and 127, the swivels 144 and 145, having those pairs of fingers pivoted thereto, respectively, a shaft provided with an arm rocked by a cam, and intermediate mechanism, substantially as described, between that shaft and those swivels, all combined and operating to swing those fingers at right angles to the direction of their spreading, all substantially as described.

6. The combination of the cam 100, the arm 102, worked by that cam and rocking on the shaft 103, and the long hook-like arm 104, worked by the arm 102 and operating, substantially as described, to raise the forward part of a tucked-paper tube into the upright position shown in Fig. 4, and afterward to draw the forward wall of the box-like form of Figs. 5 and 6 down into the form of the forward end of the diamond form of Figs. 9 and 10, all substantially as described.

7. The combination of the drop-plate 181 and two cams, and mechanism, substantially as described, between each of those cams and that drop-plate, whereby the drop-plate receives a compound sweeping and pressing motion, all substantially as described and shown.

EDWARD E. CLAUSSEN.
GEORGE MORTSON.

Witnesses for Edward E. Claussen:
ALBERT H. WALKER,
HARRY R. WILLIAMS.

Witnesses for George Mortson:
GEO. G. PRENTICE,
CHARLES D. RICE.

(No Model.)

8 Sheets—Sheet 1

C. B. STILWELL.

PAPER BAG MACHINERY.

No. 417,346. Patented Dec. 17, 1889.

Fig. 1.

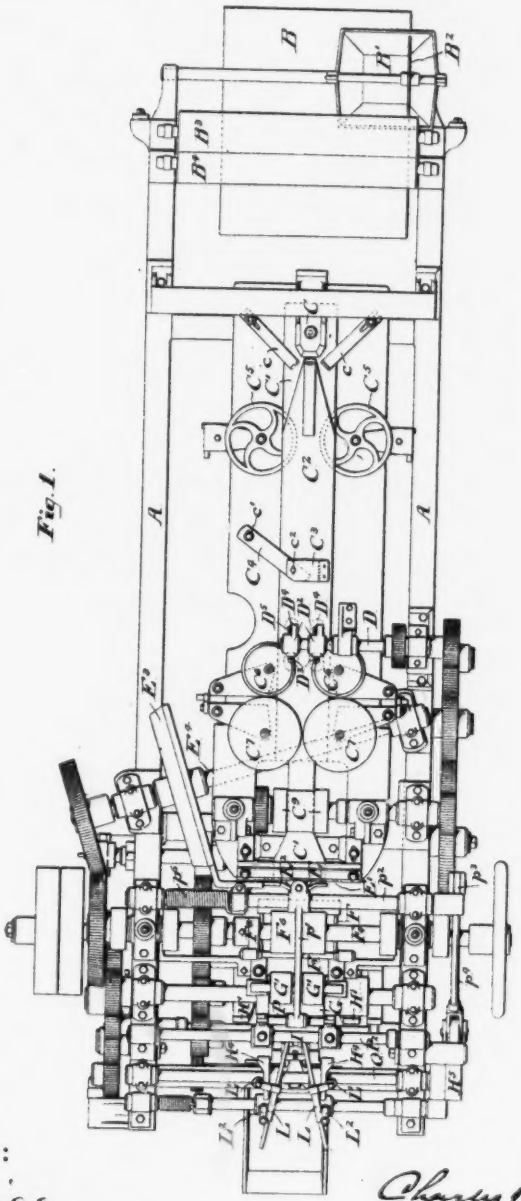

Witnesses:
A. E. Paige
Joshua Wallack, Jr.

Inventor
Charles B. Stilwell
by his attorney
Francis T. Chambers

(No Model.) 8 Sheets—Sheet 2.

C. B. STILWELL.

PAPER BAG MACHINERY.

No. 417,346. Patented Dec. 17, 1889.

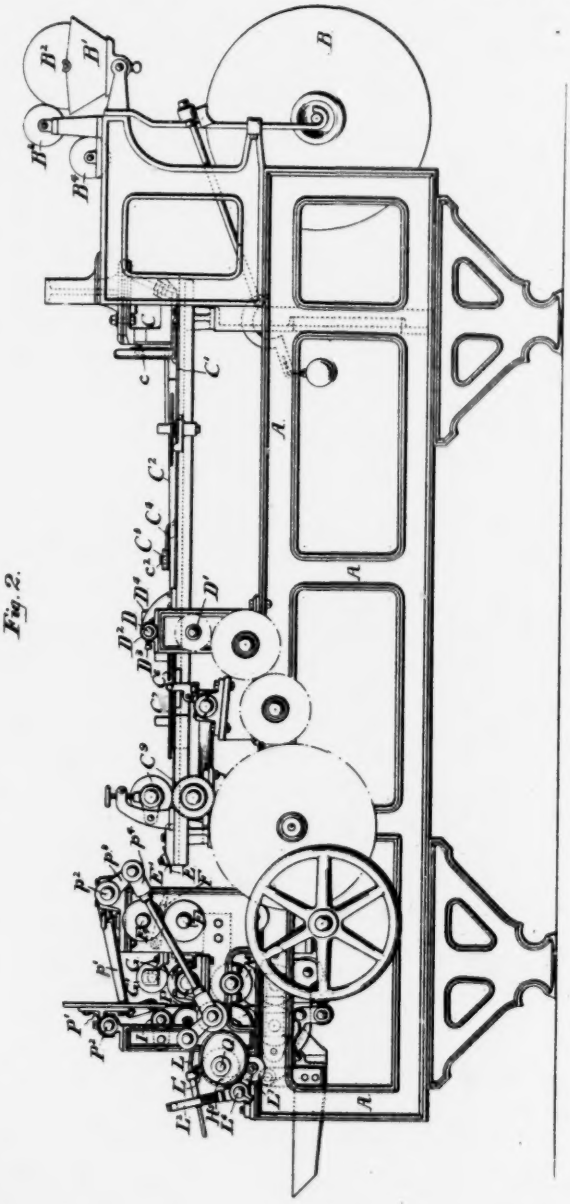

Fig. 2.

WITNESSES:

A. E. Paige

Joshua Wallack Jr.

INVENTOR

Charles B. Stilwell

by his attorney

Francis T. Chambers

(No Model.) 8 Sheets—Sheet 3.

C. B. STILWELL.

PAPER BAG MACHINERY.

No. 417,346. Patented Dec. 17, 1889.

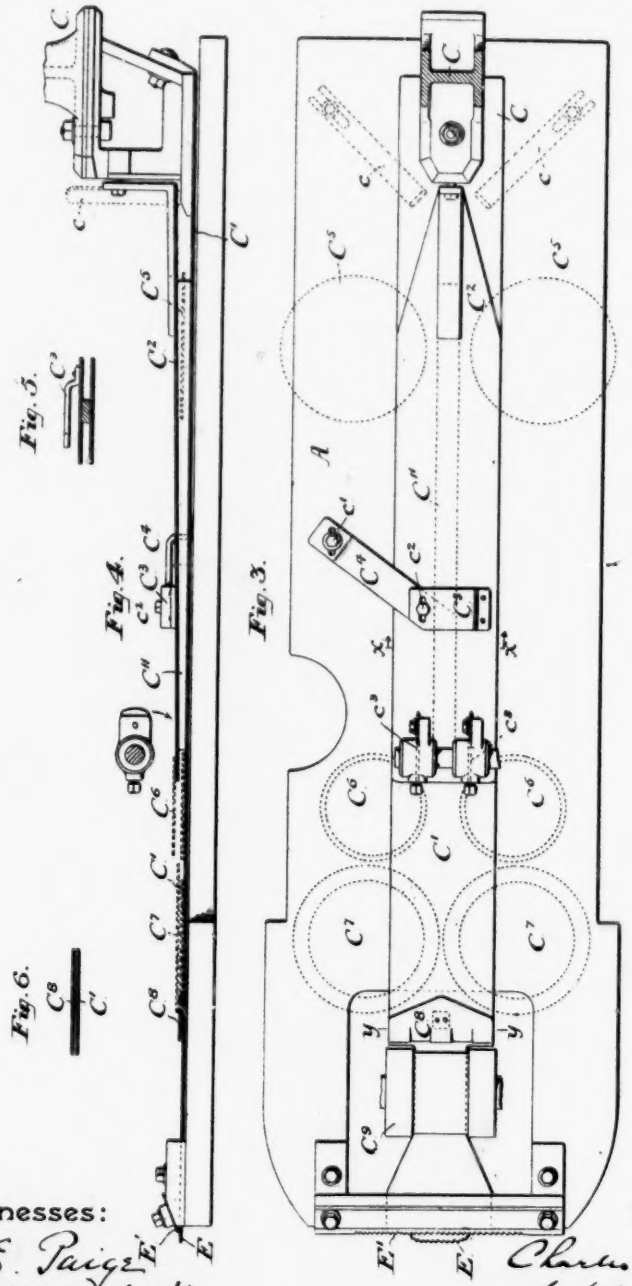

Witnesses:
A. E. Paige
Joshua Mattack Jr.

Inventor
Charles B. Stilwell
by his attorney
Francis T. Chamberlain

(No Model.) 8 Sheets—Sheet 4.

C. B. STILWELL.

PAPER BAG MACHINERY.

No. 417,346. Patented Dec. 17, 1889.

Fig. 7.

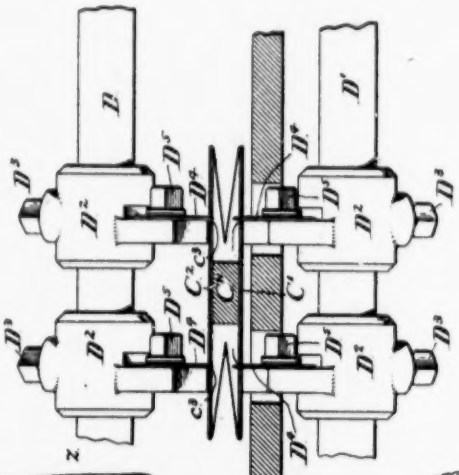

Fig. 10.

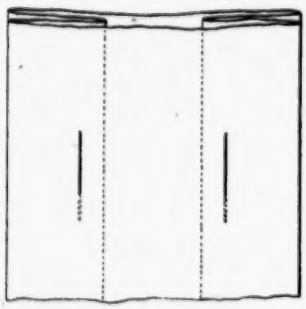

Fig. 11.

Fig. 9.

Fig. 8.

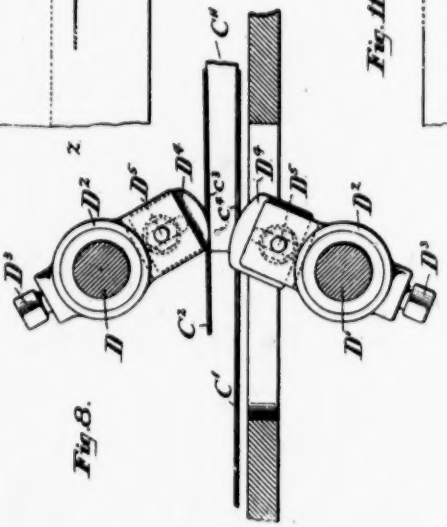

Witnesses:
A. E. Paige
Joshua Matlack Jr.

Inventor
Charles B. Stilwell
by his attorney
Francis T. Chamberlain

(No Model.) 8 Sheets—Sheet 5.

C. B. STILWELL.

PAPER BAG MACHINERY.

No. 417,346. Patented Dec. 17, 1889.

Fig. 12.

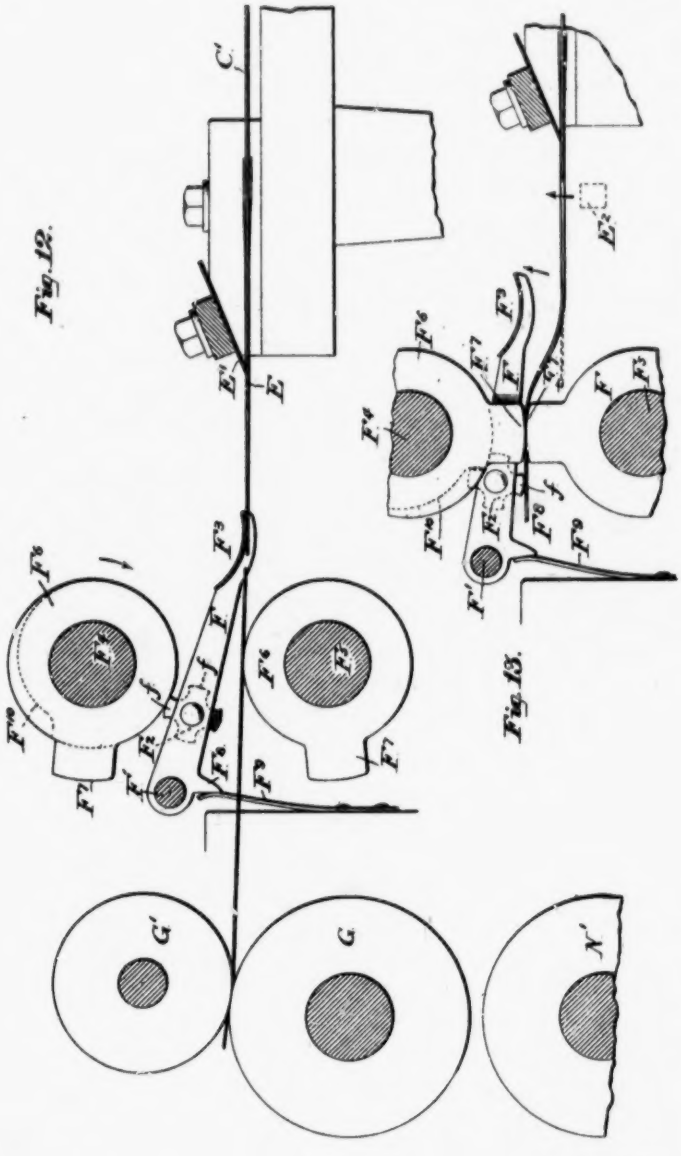

Fig. 13.

Witnesses:
A. E. Paige
Joshua Wallack Jr.

Inventor
Charles B. Stilwell
by his attorney
Francis T. Chambers

(No Model.) 8 Sheets—Sheet 6.

C. B. STILWELL.

PAPER BAG MACHINERY.

No. 417,346. Patented Dec. 17, 1889.

Fig. 14.

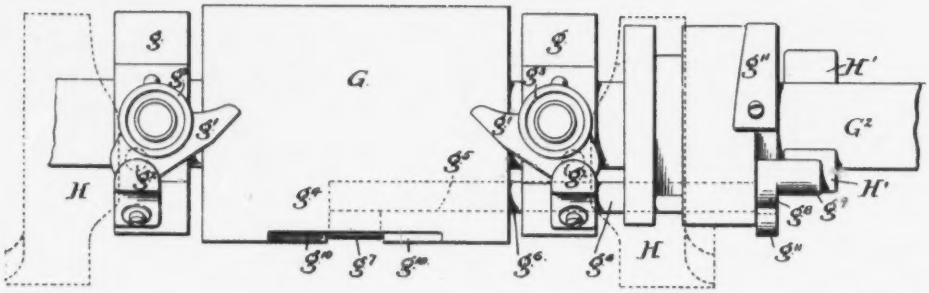

Fig. 15.

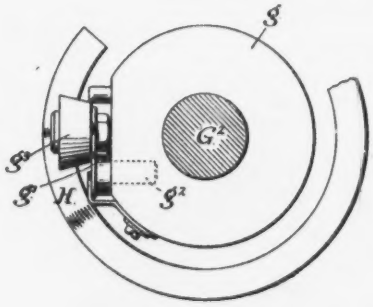

Fig. 16.

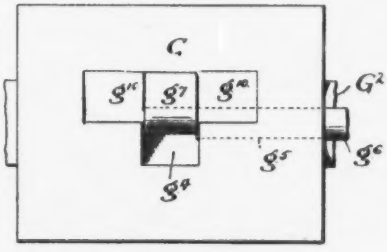

Fig. 18.

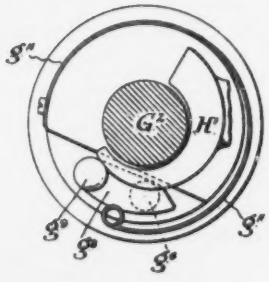

Fig. 17.

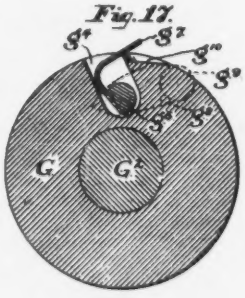

Witnesses:

A. E. Paige

Joshua Whitlock, Jr.

Inventor

Charles B. Stilwell

by his attorney

Francis T. Chambers

(No Model.) 8 Sheets—Sheet 7.

C. B. STILWELL.

PAPER BAG MACHINERY.

No. 417,346. Patented Dec. 17, 1889.

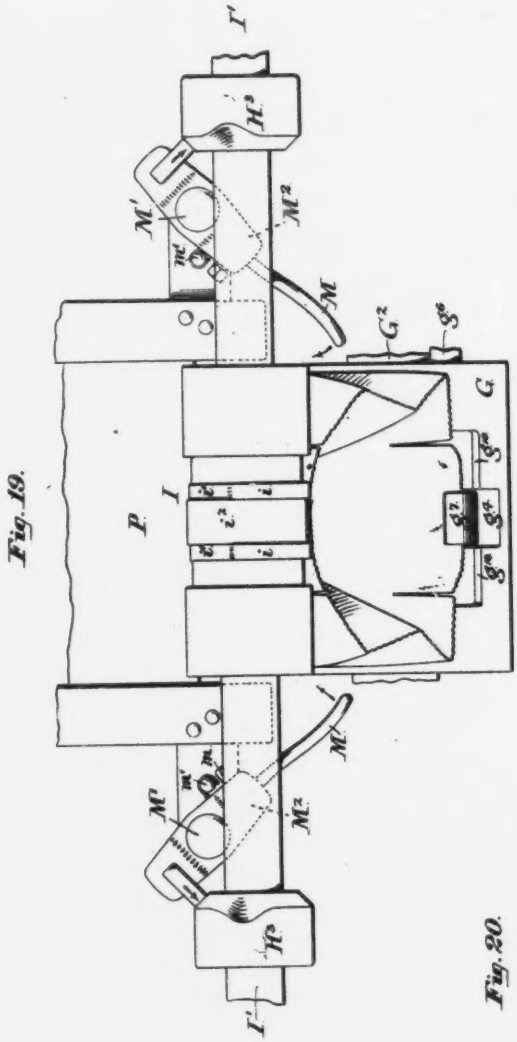

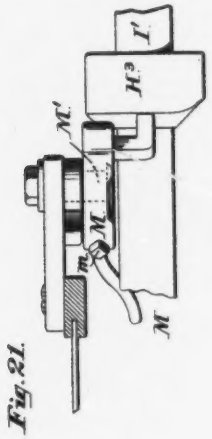

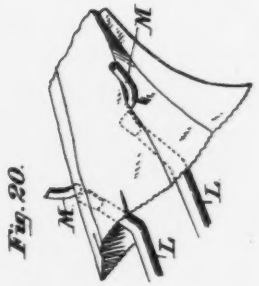

Witnesses:
A. E. Paige
Joshua Wallack Jr.

Inventor
Charles B. Stilwell
by his attorney
Francis T. Chambers

(No Model.) 8 Sheets—Sheet 8.

C. B. STILWELL.

PAPER BAG MACHINERY.

No. 417,346. Patented Dec. 17, 1889.

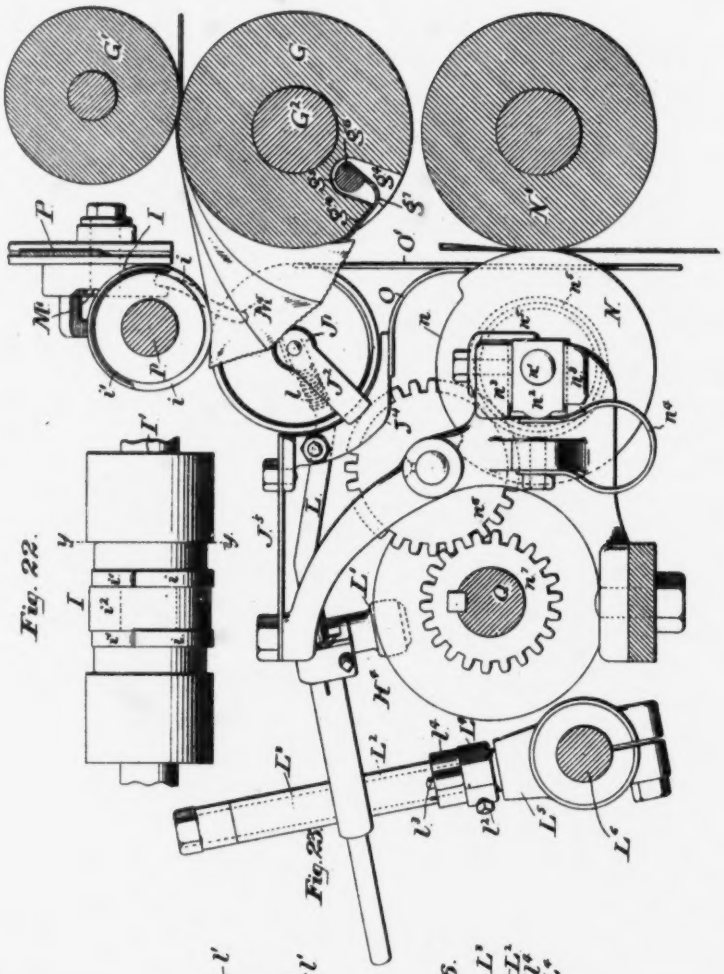

Fig. 22.

Fig. 23.

Fig. 24.

Fig. 26.

Witnesses:
A. E. Paige
Joshua McKackJr.

Inventor
Charles B. Stilwell
by his attorney
Francis T. Chambers

UNITED STATES PATENT OFFICE.

CHARLES B. STILWELL, OF PHILADELPHIA, PENNSYLVANIA, ASSIGNOR TO THE UNION PAPER BAG MACHINE COMPANY, OF SAME PLACE.

PAPER-BAG MACHINERY.

SPECIFICATION forming part of Letters Patent No. 417,346, dated December 17, 1889.

Application filed August 2, 1889. Serial No. 319,550. (No model.)

To all whom it may concern:

Be it known that I, CHARLES B. STILWELL, of the city and county of Philadelphia, State of Pennsylvania, have invented a new and useful Improvement in Paper-Bag Machinery, of which the following is a true and exact description, reference being had to the accompanying drawings, which form a part of this specification.

My invention relates to the construction of machinery for making paper bags, and especially to machinery such as is shown and described in my patent, No. 407,794, dated July 30, 1889.

My object in devising the present improvements is chiefly to improve and increase the efficiency of the said machine.

My invention will be best understood after a description of the drawings, in which it is illustrated, and in describing the said drawings, as well as more particularly in the claims, I will point out the various novel features of the machine.

Reference being now had to the drawings, Figure 1 is a plan view of a paper-bag machine having my improvements; Fig. 2, a side elevation of the same; Fig. 3, a plan view of a portion of the mechanism for forming a bellows-folded tube and severing it into bag-blanks; Fig. 4, a side elevation of the same parts; Fig. 5, a cross-section through the former-plates on the line $x\ x$ of Fig. 3, showing a part of my new adjustable device for sustaining the former-plates. Fig. 6 is a cross-section on the line $y\ y$ of Fig. 3. Fig. 7 is a front view of the mechanism for slitting the bellows-folded tube longitudinally; Fig. 8, a side view of the same; Fig. 9, a view showing the construction of the knife-blades; Fig. 10, a plan view of the tube after it has been slit; Fig. 11, a section of said tube on the line $z\ z$ of Fig. 10. Fig. 12 is a side elevation showing my new device for forming a slack in the tube at the time a blank is cut from it, Fig. 13 showing the parts in a different position. Fig. 14 is a plan view of the roll over which the bag-blank is fed and on and by means of which a portion of the operation of opening the bottom of the blank into the diamond form is carried on, said view showing also the mechanism immediately connected with said roll. Fig. 15 is an end view of the same; Fig. 16, a view of the roll, showing its central cavity and gripping-finger. Fig. 17 is a central cross-section through the roll; Fig. 18, an end view showing the mechanism for actuating the central gripping-finger of the roll. Fig. 19 is a view in direction about perpendicular to a plane passing through the axes of shafts I′ and G^2, Fig. 22, of a portion of the front end of the machine, showing the aligning-fingers which cause the upper ply of the blank to remain in proper position to receive the distending fingers. Fig. 20 is a perspective view illustrating the relative action of the aligning and distending fingers; Fig. 21, a plan view of the aligning-finger and the cam which actuates it. Fig. 22 is a front view of the roll I; Fig. 23, a side elevation of the distending apparatus at the end of the machine; Fig. 24, a perspective view of the end of one of the distending-fingers; Fig. 25, perspective views of the spring and end plate attached to said finger, and Fig. 26 is a detail hereinafter referred to.

A is the frame of the machine, the general character of which (the machine) is similar to that shown in my former patent aforesaid, and as shown in Figs. 1 and 2 of the drawings.

In the present application I have not illustrated the mechanism for forming the final folds of the bottom, but only that which forms the blanks and opens their bottoms into what is called the "diamond fold."

B is the roll of paper; B′, a paste-trough; B^2, the paste-roller; B^3 and B^4, guide-rolls, and C the standard to which the former-plates C′ C^2 are attached.

c c are guide-fingers; C^3 C^3, guide-rolls working with their edges between former-plates C′ C^2.

C″ is a wedge extending between plates C′ C^2 and uniting them together.

All the above parts are of well-known construction and need not be particularly described.

To the top of the upper former-plate C^2, I secure a clip C^3 with a slot in its free end, and to the frame A, I secure by a bolt c', passing through a slot therein, a clip C^4, which is again secured to the clip C^3 by a bolt c^2, passing

through the slot in said clip. The function of the two clips is to support the former-plates and enable them to be adjusted and aligned from time to time, for in making the bellows-sided square-bottomed bags for which my apparatus is especially intended the utmost nicety of alignment is necessary to insure perfect work, and to that end I have devised the adjustable clips C^3 and C^4. A short distance back of clip C^3 the upper former-plate C^2 terminates, and near its end I form longitudinal slits c^3 c^4, below which are corresponding slits c in the lower plate C′, and to revolving shafts D D′, above and below the former, are secured, by means of adjustable holders D^2, knife-blades D^4.

D^3 D^3, &c., represent set-screws for adjusting the knife-holders on the shafts; and D^5 D^5, &c., set-screws for adjusting the slotted knife-blades D^4 on the holders. The speed of shafts D D′ is similar and such that the knife-blades revolve once for every bag-blank length working through the slits c^3 and c^4 in the former-plates, and the bottom ones being set so as to cut slightly in advance of those on top, so as to slit the paper, as shown in Figs. 10 and 11. This device for cutting the paper forms one of the novel features of the machine.

C^6 C^6 and C^7 C^7 are guide-rolls for heading and aligning the tucked tube, and as they form in themselves no part of the present invention they need not be particularly described. In front of the rolls C^7, I secure upon the lower former C′ a plate C^9, (see Figs. 3, 4, and 6,) forming an additional aligning-guide, which, co-acting with the guide-rolls C^6 and C^7, I have found to greatly aid in keeping the tube straight and free from side strains, which would cause it to fold badly in forming the bottom. The tucked sides of the tube pass beneath the edges of this plate and the upper ply over it.

C^9 C^9 are feed-rolls, and on the end of the former-plate C′ is a knife E, for cutting the lower side of the tube, while above knife E is another knife E′, which acts to cut the sides and top of the tube and complete the severing of the blank.

E^2 is a revolving striker, which coacts with the knife-blades E E′ to sever the paper in the usual manner, the striker being attached to a wheel E^3, set on an oblique shaft E^4.

In using a striker and stationary knives to sever the blanks it is advantageous to have a slack in the paper against which the striker presses, so that it will be free to bend up on the edges of the knives. My new device for effecting this slack in the paper is shown in Figs. 12 and 13. In the space which intervenes between the knife-edges E E′ and the rolls G G′, which feed the blanks forward, I interpose an arm or arms F, pivoted on a shaft F′, and having at their other ends a plate F^3, which should be slightly curved downward, as shown. Upon revolving shafts F^4 and F^5, above and below arms F, I secure hubs F^6, from which project roll-segments F^7, which, as the shafts revolve, meet and grip the paper, as shown in Fig. 13. The normal line of the web being below the plane on which the segments meet, the tube is raised upon the lower segment, as shown. On the shaft F^4 is secured a cam F^{10}, which presses against the arms F or an attachment thereto —such as the wiper F^2—which, as shown, has a number of faces *f*, which can be turned up in turn to act on the face of cam F^{10}. A spring F^9, acting on a heel F^8 of arms F, keeps them in contact with the cam F^{10}, which is so formed and set as to hold the plate F^3 in the position shown in Fig. 12 until after the roll-segments F^7 have gripped the tube, as shown in Fig. 13, when the plate is allowed to rise, as shown, thus forming a slack in the paper just before it is struck by the striker E^2.

G′ and G^2 (see Figs. 14 to 18, and Fig. 23) are feeding-rolls through which the severed blanks are fed to the mechanism which opens their bottoms. On the lower roll G, or on parts *g*, secured to the same shaft G^2, are the gripping-fingers *g′*, pivoted at g^2 and having cam-rolls g^3 working against cams H, which cause the fingers to clamp the edges of the paper on the rolls and release it at proper times, as described in my former application. In the center of roller G, I form a recess g^4, and from its lower part I form a longitudinal perforation g^5 to receive a shaft g^6, to which a gripping-finger g^7 is attached. The portion of the roll-face on which finger g^7 presses is preferably flattened, as shown at g^{10}. The shaft g^6 extends beyond the end of roll G and has on its end a crank-like cam-wiper g^8 g^9, the pin g^9 of which rests against a stationary cam H′, which, as the roll revolves, causes the shaft g^6 to turn so as to alternately clasp the finger g^7 down on the roll and cause it to move up from it. The function of this centrally-located gripping-finger is to clamp the front edge of the bottom ply of the blank against the lower roll G and cause it to move down with it (said roll) while the fingers *g′* and distending-fingers L are, with their co-acting mechanisms, opening the blank on the plane of the bag-bottom to be formed on it, the lower ply being thus drawn down inside the guide-plate O′ and delivered to the rolls N N′ in correct position.

The use of a central gripping-finger was mentioned and illustrated in my former application as an alternative to the device particularly described and claimed there, but which, as will be seen, is not applicable to my improved machine.

After issuing from between the rolls G G′ the top ply of the blank is gripped between the roll I and the narrow roll J, which last roll is freely journaled and supported on a spring J^3, its journal J′ being attached to the spring through connections J^2 and J^4. The roller I, which coacts with roll J, is in my present construction made up of two rims *i i*, cut away at *i′ i′* and fastened to the positively-driven

shaft I′ and a loosely-journaled ring i^3, of less diameter than the thicker portion of rims i, but of greater diameter than the recessed portions i'. The roll I is set so that when the edge of the blank is presented to it it is gripped between rims i and the narrow roll J and drawn forward to the full extent desired. Then when the upper ply of the paper is drawn backward from roll J the roll I has turned so that the recessed portion i' of the roll is opposite roll J, and the paper is thus released from the grip of rims i, and is held between roll J and the loose ring i^3, so that it meets with only a slight frictional resistance to its backward motion.

It will be noticed that in this machine I secure the guide-plate O′ to the support J^4, which is fastened to spring J^5. This mode of securing the guide-plate I have found to give good results, as giving the plate some power of yielding to under pressure.

The distending-figures L L are, as shown, substantially similar in principle to those shown in my former patent. They are secured to tubes L^2, resting on rods L^3, which are secured by a clamp L^5 to a rock-shaft L'. Springs l^3 tend to keep the points of the fingers pressed together, and cams H^4, acting on cam-rollers L′, attached to fingers L, cause them to diverge at proper intervals, an arm L^7, resting against a cam H^5, (see Fig. 2,) causing the rock-shaft to move to give the necessary upward motion to the fingers. The spring l^4 is fastened at one end to pin l^5 on an adjustable clamp L^4, which is secured to rod L^3 by a set-screw l^6. The other end of the spring is attached to tube L^2. (See Fig. 26.)

The special construction shown is novel and an improvement on the arrangement shown in my former patent; and another important improvement in this part of the apparatus consists in making the ends of fingers L elastic, which I accomplish by connecting a steel plate l' with the rigid end of the fingers by a spring, such as is shown at l, Figs. 24 and 25.

When the machine is running at high speed, it is important that the distending-fingers should strike the corners of the upper ply of the tube as nearly in the spot where the corners of the bag-bottom are to be formed as possible, and to facilitate this I have devised the mechanism shown in Figs. 19 to 21. To the frame of the machine I attach pivots M′, on which are secured blocks M^2, and in these blocks are secured fingers M by means of set-screws m, by which they can be adjusted and secured. Springs m' serve to press the fingers inward, as shown, and wipers on the backs of blocks M^2 bear against cams H^3, which, as shown, are secured to the shaft I′, but which of course could have independent connections. The fingers are so placed and the cams H^3 so set that the fingers (which I will hereinafter refer to as "aligning-fingers") normally rest outside of the path of the blank, but just before the distending-fingers L are operated the aligning-fingers are thrown quickly upward, so as to tightly press upward beneath the corners of the upper ply and upper inwardly-folded part of the side of the blank, thus counteracting any tendency to sag, and insuring that when the fingers L come in contact with the corners they (the corners) will be in the correct line and position.

Referring next to the feed-rolls N N′, through which the blanks first pass after having had their bottoms distended into the diamond form, I have found it advantageous not to engage the front end of the blank so as to draw upon it much in front of the first cross-fold in the paper, and I have accordingly recessed the presser-wheel N, as shown at n, and driven this wheel by positive connections, as shown at n^2, n^4, and n^7, the recess of course being so that as to clear that portion of the blank upon which it is not desirable to pull, while at the proper moment the blank is seized between the extended face of roll N and roll N′. Roll N is journaled at n' in a sliding block n^2, moving in guides n^3 and impelled forward by a spring n^4, a stop n^5 being provided which permits the spring to force the extended periphery of roll N against roll N′, but does not permit any contact between the recessed portion of the roll N and roll N′.

The operation of my improved machine is, except in some minor details, the same as described in my former patent, granted July 30, 1889. The web of paper is wound on the roll B, thence passes over roll B^3 and under roll B^4, the paste-roller B^2 applying a line of paste to one edge as it passes upward. From roller B^4 the web passes beneath former-plate C′ and is folded down upon it and tucked between the plates C′ and C^3 by fingers c and wheels C^5. One edge of the paper is folded down on the upper former-plate, passing beneath the clips C^4 and C^5, while the other pasted edge lies over clip C^6. Any convenient device for pressing the pasted seam may be used. The revolving shafts D and D′ cause the cutters to revolve once for every bag-blank length of tube passing between them, and the knives D^4 slit the top and bottom plies of the paper, as shown in Figs. 10 and 11. The tube then passes between guide-wheels C^6 C^6 and C^7 C^7 and its upper ply over plate C^8, which is of the same breadth as the former-plate C^2 and may be considered, together with the guide-wheels, as a continuation of it, and from the plate C^8 it passes with the paper accurately aligned and unstrained to the end of the former C′, whereon a knife-blade E is secured, with a blade E′ secured above it, as shown. Passing by the knife-blades the end of the tube passes beneath the plate F^3 and between the shafts F^4 and F^5, the revolving roll-segments of which grip it and move it forward, in doing so raising the tube above the plane drawn from the knife-blades to the plate F^3 in its downward position. The cam F^{10} then permits the plate F^3 to rise, leaving a slack between the end of

the knives and the gripping-segments, and the striker E^2 then comes in contact with the paper and severs the tube against the knife-edges.

With the exception of the device for supporting the formers, the slitting mechanism, the use of the plate C^8, and the device for forming a slack in the tube the foregoing parts of the machine are all of a well-known kind. It will be obvious that the particular kind of knives used to coact with the striker in severing the blank is not material, any of the known combinations of one or more knives and a striker being of course equally adapted for use with my device for forming a slack in the tube prior to the action of the striker upon it. It will also be obvious that the plate F^3 may normally lie below the line of the paper between the end of the former and the rolls G G', in which case the segments F^7 may meet on said line instead of above it, as shown, the action in forming a slack being the same when the plate F^3 rises. The severed tubes next pass between the rolls G G', the central gripping-finger g^7 grasping its front lower edge and pulling it down as the rolls revolve, while the upper edge passes out over the narrow supporting-roll J and is gripped and drawn forward by the rims *i*. The gripping-fingers *g'* are operated so as to engage the corners of the lower plies of the blank and clamp them against roll G in the line on which the bag-bottom is to be formed, and the cams actuating the rock-shaft L^4 and the fingers L are so set as to cause the said distending-fingers to press upward and outward, so as to engage the opposite corners of the upper plies of the blank and coact with the fingers *g'* in opening the blank out square on the plane of the bag-bottom. Just before the fingers L engage the blank the aligning-fingers M are thrown up, so as to insure the upper corners of the blank being in the plane in which the fingers L are arranged to engage them. This device and the additional device of making the operative ends of the distending-fingers elastic greatly increases the accuracy of operations. When the top of the blank has been pushed forward over the roll J for a certain distance the tucker P comes down upon it and draws it backward from said roll, and at the point in the motion of the machine where this occurs the recesses *i'* in rims *i* cause them to release their grip on the paper, which is then clamped between roll J and the loose sleeve i^2, which permits it to be readily drawn back notwithstanding the continuous motion of shaft I' in the opposite direction.

The tucker P and its actuating mechanism is shown in Figs. 1 and 2 of the drawings and does not differ substantially from the similar mechanism described in my former patent. The tucker slides in fixed guides P', fixed adjustably to the frame at P^2. A link *p* connects the tucker to a lever-arm *p'*, attached to a shaft p^2, said shaft being actuated by a lever-arm p^3, to which is connected a rod p^4, the end of which rests against an actuating-cam H^5. A spring p^5 serves to keep the tucker normally in its uppermost position. As these parts do not, as aforesaid, differ materially from those described in my former patent, it is not necessary to show them in detail. As the partially-opened blank passes downward, its lower end passes between the rolls N and N', the recess *n* in roll N being set so that the end of the blank is not gripped between the rolls until a point is reached just in front of the transverse fold made by tucker P when the blank is gripped and drawn forward between said rolls N and N'.

The remaining parts of the machine I have not illustrated, as they form no part of my present invention, and are or may be the same as shown and described in my former patent, upon which my present case is an improvement.

Having now described my invention, what I claim as new, and desire to secure by Letters Patent, is—

1. In a bag-machine, the combination of the former-plates C' C^2, with a clip C^3 secured to the top former-plate, and the supporting-clip C^4, attached to the base of the machine and adjustably connected with clip C^3, substantially as and for the purpose specified.

2. In a bag-machine, the combination of the former-plates C' C^2, with a clip C^3 secured to the top former-plate, and the supporting-clip C^4, adjustably attached to the base of the machine and adjustably connected with clip C^3, substantially as and for the purpose specified.

3. In a bag-machine, the lower former-plate C', having a shorter upper former-plate C^2 secured over it, in combination with a short supplemental former-plate C^8, attached to the lower plate, and aligning-guides situated above the lower former, between the end of plate C^2 and plate C^8, all substantially as and for the purpose specified.

4. In a bag-machine, the former-plates C' C^8, having parallel corresponding slits c^3 c^3 and c^4 c^4 formed in them, in combination with revolving slitting-knives secured in pairs on shafts situated above and below the former-plates and so arranged as to enter the slits in the plates as they revolve, substantially as and for the purpose specified.

5. In a bag-machine, the combination of mechanism for forming a bellows-folded tube, a striker, and one or more knives for severing the tube into bag-blanks, of revolving roll-segments arranged to grasp the tube at intervals, a presser-plate acting on the tube between the striker and roll-segments, and cam mechanism, as described, whereby said plate is made to rest on the paper below the contact-plane of the roll-segments before the paper is gripped by them and move upward, leaving a slack in the paper after it is gripped, all substantially as and for the purpose specified.

6. In a bag-machine having mechanism for

folding a bellows-sided tube and severing it into bag-blanks, and rolls G G′, whereby the blanks are fed to mechanism for opening the bottom of the blanks, the combination of fingers arranged to engage the upper corners of the blank on the line of the bag-bottom to be formed with the under roll G, having fingers acting to engage the lower corners of the blank on the line of the bag-bottom to be formed, and a central gripping-finger g^7, arranged to clamp the advancing lower edge of the blank centrally and draw it down as the roll revolves.

7. In a bag-machine substantially as specified, the combination of a narrow supporting-roller J, with a roll I, having recessed rims i and a central loosely-journaled ring i^2.

8. In a bag-machine substantially as specified, the combination, with the distending-fingers L L, of spring-supported terminal plates l'.

9. In a bag-machine substantially as specified, the combination, with the rock-shaft L^4, of rods L^5, secured to said shaft, tubes L^2, journaled on said rods, springs l^1, acting to turn the tubes inward, distending-fingers L, secured to tubes L^2, cam-rolls L′, attached to fingers L, and cams acting on said cam-rolls, all substantially as and for the purpose specified.

10. In a bag-machine substantially as specified, the combination, with the distending-fingers L, of the aligning-fingers M, and cam mechanism, as specified, whereby said aligning-fingers are made to press up the upper corners of the blank as the distending-fingers engage them.

CHARLES B. STILWELL.

Witnesses:
FRANCIS T. CHAMBERS,
JOSHUA MATLACK, Jr.

(No Model.) 7 Sheets—Sheet 1.

N. W. TAYLOR.

PAPER BAG MACHINE.

No. 439,703. Patented Nov. 4, 1890.

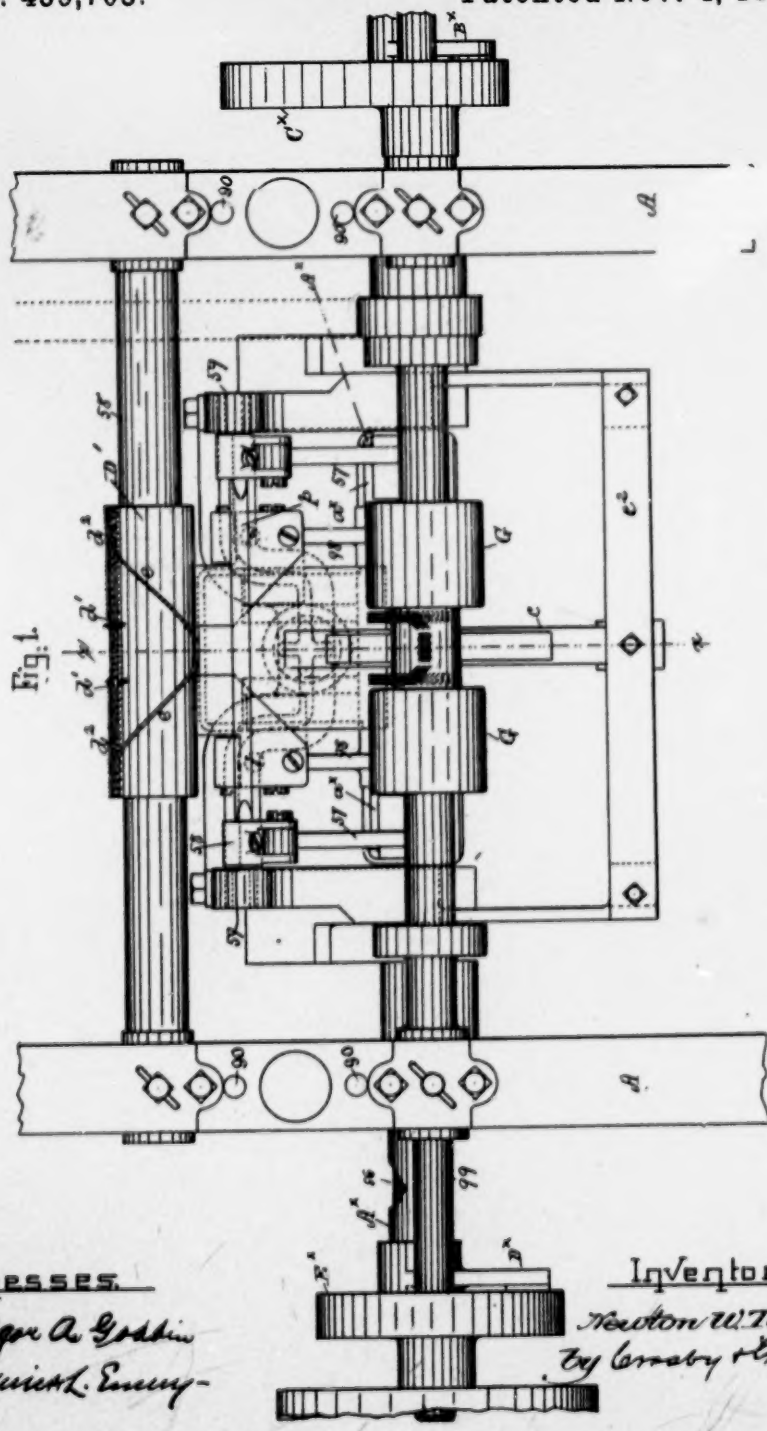

Fig. 1.

Witnesses.
Edgar A. Goddin
Frederick L. Emery

Inventor.
Newton W. Taylor.
by Emery & Gregory
Attys

POOR COPY

(No Model.) 7 Sheets—Sheet 2.

N. W. TAYLOR.

PAPER BAG MACHINE.

No. 439,703. Patented Nov. 4, 1890.

Fig. 2.

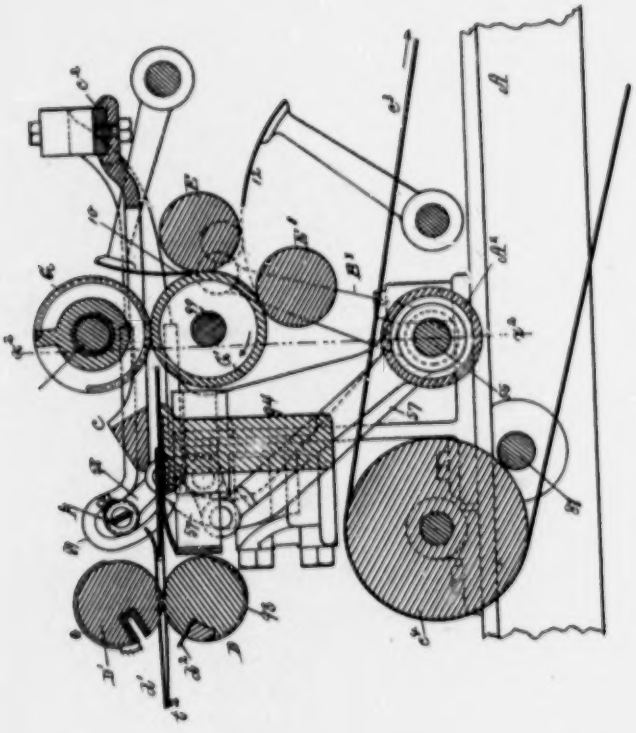

Witnesses.
Edgar A. Godden
Francis L. Emmy

Inventor.
Newton W. Taylor.
by Crosby Gregory & Perkins
Attys.

(No Model.) 7 Sheets—Sheet 3.

N. W. TAYLOR.

PAPER BAG MACHINE.

No. 439,703. Patented Nov. 4, 1890.

Fig. 5.

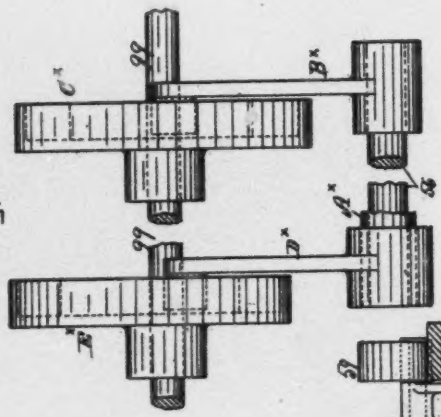

Fig. 3.

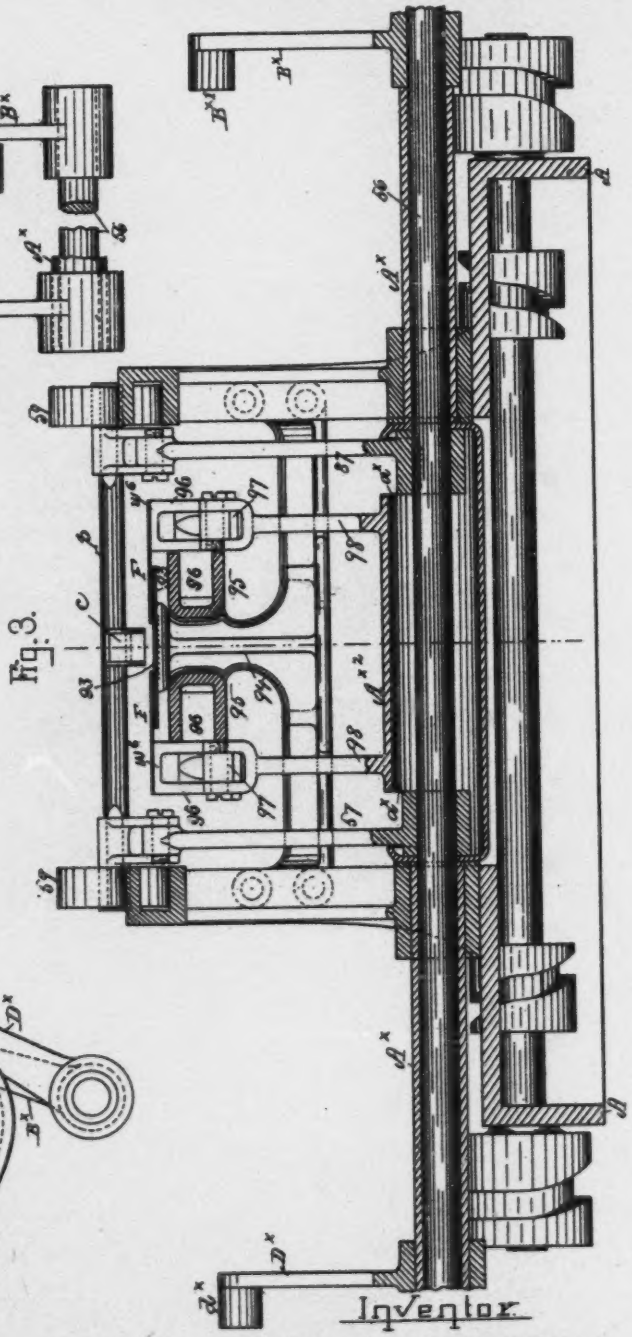

Fig. 4.

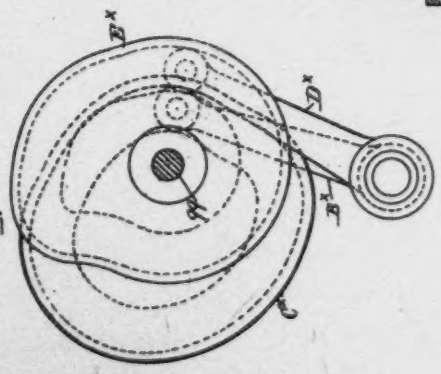

Witnesses.
Edgar A. Goldin
Frederick L. Emery

Inventor.
Newton W. Taylor.
by Crosby & Gregory Attys.

(No Model.)

7 Sheets—Sheet 4.

N. W. TAYLOR.

PAPER BAG MACHINE.

No. 439,703. Patented Nov. 4, 1890.

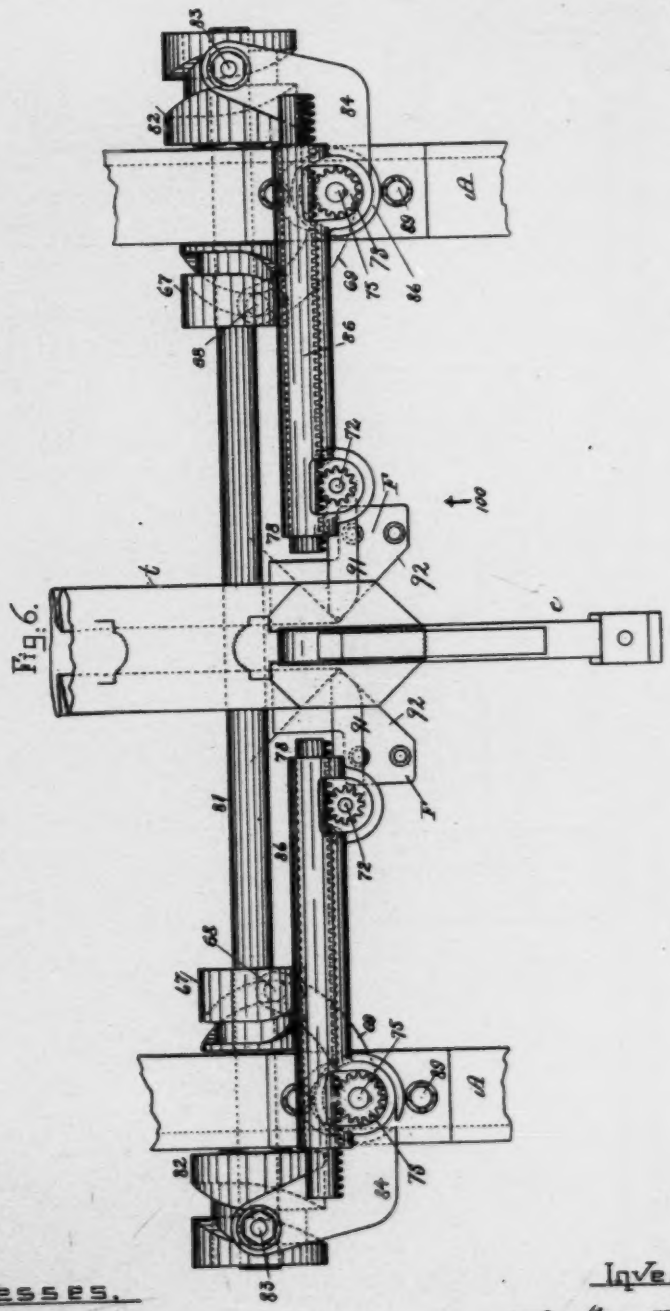

Fig. 6.

Witnesses.
Edgar A. Goddin
Frederick L. Emery

Inventor
Newton W. Taylor.
by Lemuel W. Serrell & Co.

(No Model.) 7 Sheets—Sheet 5.

N. W. TAYLOR.

PAPER BAG MACHINE.

No. 439,703. Patented Nov. 4, 1890.

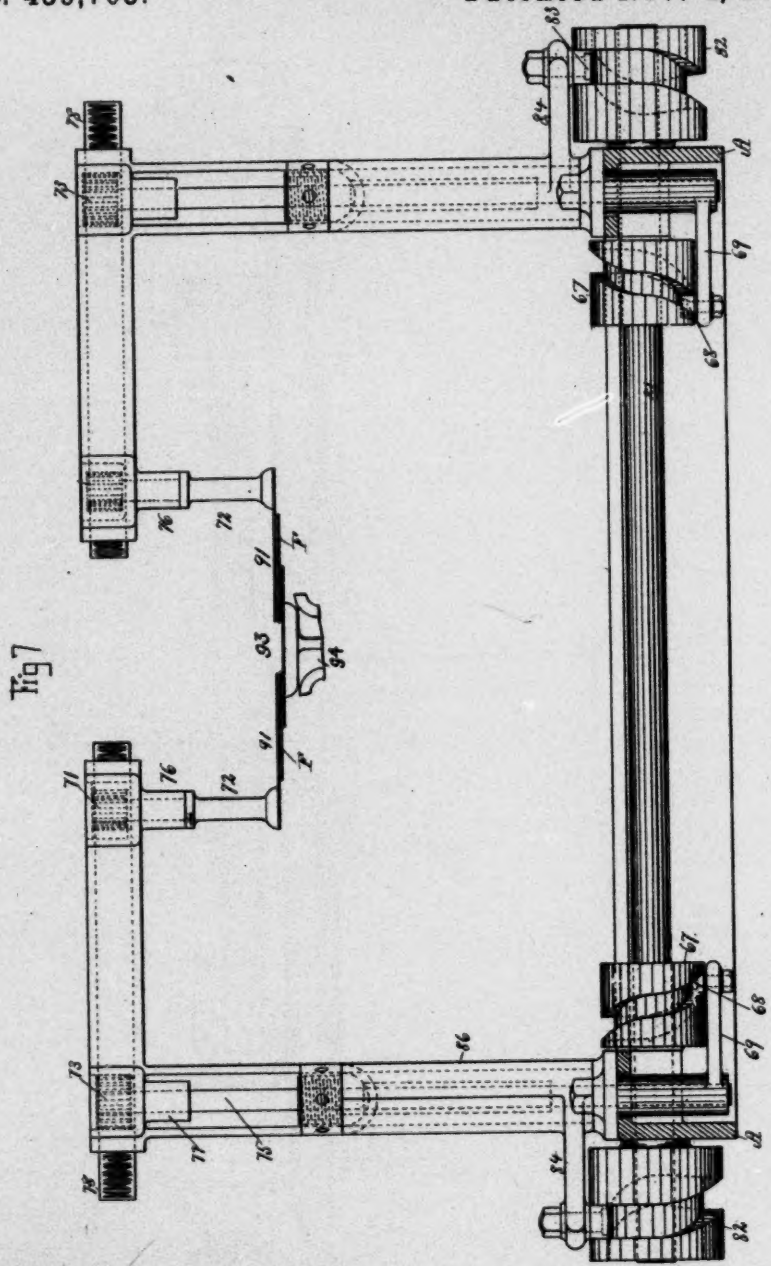

Fig 7

Witnesses.
Edgar A. Goddin
Frederick L. Emery

Inventor
Newton W. Taylor
by Crosby & Gregory
attys

(No Model.) 7 Sheets—Sheet 6.

N. W. TAYLOR.

PAPER BAG MACHINE.

No. 439,703. Patented Nov. 4, 1890.

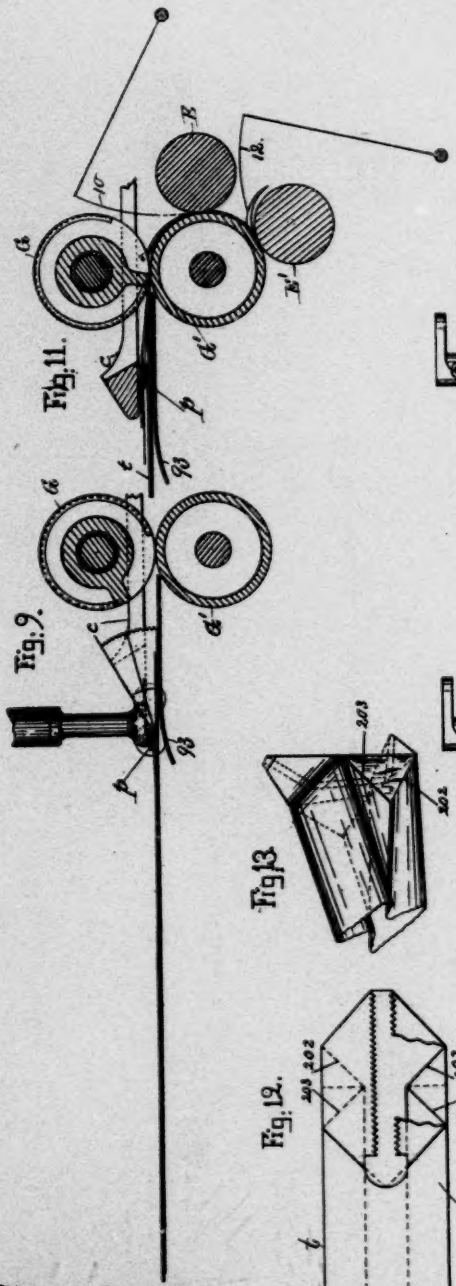

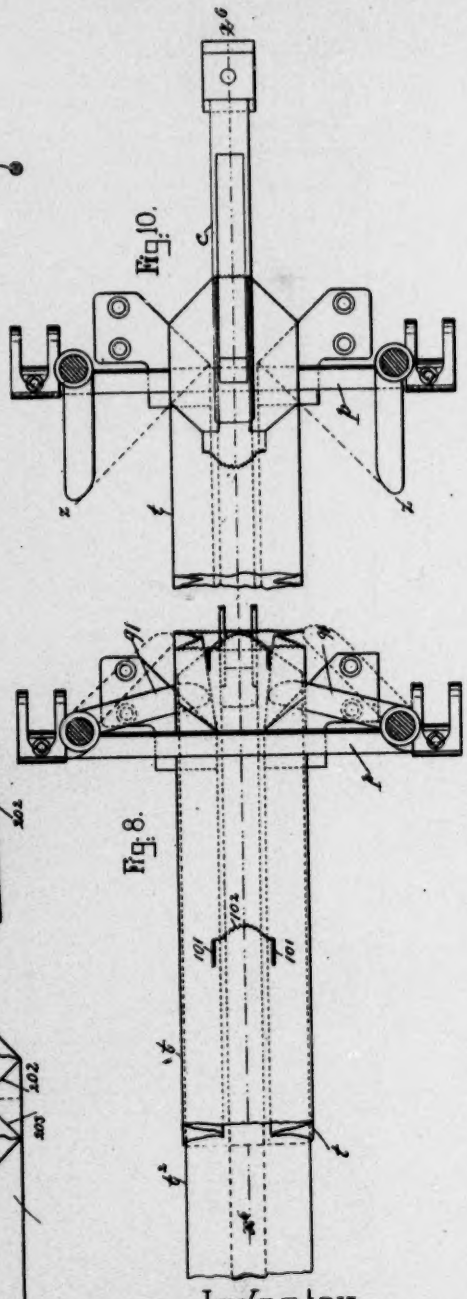

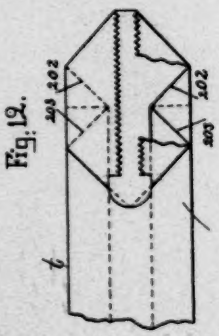

Witnesses.
Edgar A. Geddes
Frederick L. Emery.

Inventor
Newton W. Taylor.
by Lovejoy & Gregory Attys

(No Model.) 7 Sheets—Sheet 7.

N. W. TAYLOR.

PAPER BAG MACHINE.

No. 439,703. Patented Nov. 4, 1890.

Fig. 14.

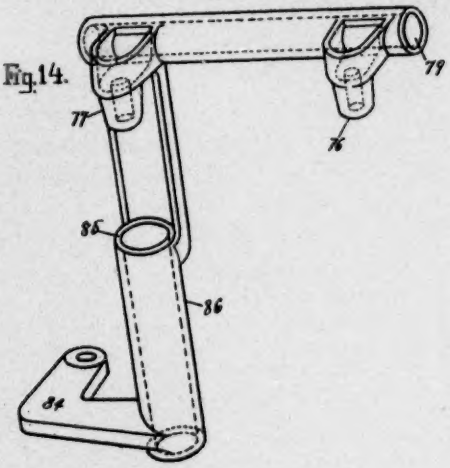

Fig. 16.

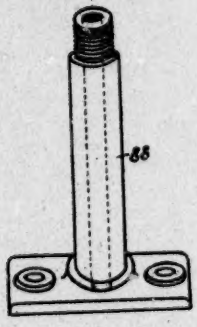

Fig. 15.

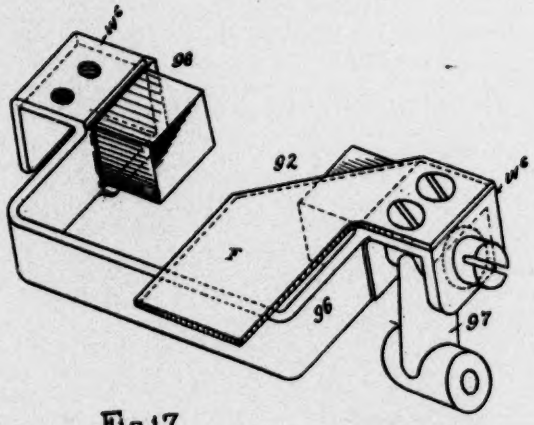

Fig. 17.

Witnesses.
Edgar A. Goddin
Frederick L. Emery

Inventor.
Newton W. Taylor.
by Lovejoy & Longory Attys.

UNITED STATES PATENT OFFICE.

NEWTON W. TAYLOR, OF CLEVELAND, OHIO.

PAPER-BAG MACHINE.

SPECIFICATION forming part of Letters Patent No. 439,703, dated November 4, 1890.

Application filed January 14, 1890. Serial No. 336,902. (No model.)

To all whom it may concern:

Be it known that I, NEWTON W. TAYLOR, of Cleveland, county of Cuyahoga, State of Ohio, have invented an Improvement in Paper-Bag Machines, of which the following description, in connection with the accompanying drawings, is a specification, like letters and figures on the drawings representing like parts.

This invention has for its object to improve that class of machine adapted for the production of a square-bottomed bellows-sided bag, my improvements relating chiefly to means for forming the bottom of the bag and laying the folds therein accurately and rapidly.

In accordance with my invention a tube having bellows, or "plicated sides," as it is called, is made in any usual way by any usual well-known mechanism. The bellows-sided tube, in the formation of the square bottom, is entered by a suitable nose or finger which acts upon the inner part of the upper ply of the tube, while the tube is acted upon across its upper side by the main folding-blade. With these common devices I have combined radial folding-plates which enter and remain in the plicated folds at the outer or side edges of the tube, the said plates occupying a position below and in advance of the main folding-blade when the latter is thrown down on the tube to tuck or fold it under the usual nose or finger which enters the tube and acts on the upper ply thereof to form the diamond fold, the inclined edges of the said plates nearest the leading end of the tube being sufficiently in advance of the said main folding-blade to enable the said plates as the upper ply of the tube is being turned back to define the position of the radial creases in the diamond fold nearest the leading end of the bag, the said plates being moved forward in unison with the main folding-blade, while the nose acts to turn the upper ply of the tube back, for it will be understood that at such time the forward feeding movement of the tube is not suspended, and therefore the said plates and main folding-blade must have a slight forward movement in unison at the speed of movement of the tube. I have also added to the said parts radial wipers which enter the plicated folds, and are made to move therein in a direction opposite that of the movement of the tube through the machine, the said wipers being moved in such direction or having their effective stroke only after the upper ply of the open leading end of the tube has been turned back over the main folding-blade by the nose or finger, the said effective wiping movement of the wipers being at such time in a plane above the plane occupied by the main folding-blade, the said radial wipers forming or defining the radial folds in the bottom of the bag most remote from the leading end of the tube. I have combined with the wipers referred to, which act to form the radial creases in the rear part of the diamond fold, mechanism whereby the resultant movement of the said wipers is in a diagonal rather than in a curved line with relation to the longitudinal center of the tube.

Figure 1 is a top or plan view of a sufficient portion of a paper-bag-making machine to enable my invention to be understood, the radial wipers and their actuating devices shown in Figs. 6 and 7 being omitted; Fig. 2, a vertical longitudinal section thereof in the line $x\ x$, Fig. 1; Fig. 3, a cross-section and elevation in the line x^2, Fig. 2, looking to the left, the paste-roll and the tucker-roll under it being omitted. Figs. 4 and 5 are views to be referred to of some of the actuating-cams. Fig. 6 is a plan view of the radial wipers removed from Fig. 1 and actuating mechanism therefor; Fig. 7, an elevation of the parts shown in Fig. 6, looking in the direction of the arrow 100, said figure showing the radial folding-plates and the table-plate. Fig. 8 is plan view showing the tube, the main folding-blade, the radial folding-plates, the wipers, and part of the nose. Fig. 9 is a longitudinal section thereof. Fig. 10 shows the parts represented in Fig. 8, but in other positions, the diamond fold having been laid for the bottom of the bag, the said figure showing all the nose. Fig. 11 is a section of Fig. 10 in the line x^6, but with the pasting-roll and the rolls and tucking-blades employed to make the first and second cross-folds in the diamond fold, part of the nose being broken off. Fig. 12 shows the diamond-fold laid in the leading end of the plicated tube, part of the bottom being broken out to better show the radial folds of the plicated sides of the bag, they being at right angles to each other

and radial to the center of the bottom. Fig. 13 shows a bag, it having a diamond fold made in it, and thereafter partially opened at one end, the diamond or corner flaps not being folded down. Fig. 14 shows one of the sleeves carrying one of the actuating rack-bars for the wipers. Fig. 15 shows the hollow post; Fig. 16, the nut which holds the sleeve on the post, and Fig. 17 a perspective detail of the yoke and one of the radial folding-plates and a link 97.

The frame-work A is and may be of suitable shape to sustain the working parts.

The rolls D D′, the former having cutting-blades d^2, (see Figs. 1 and 2,) while the latter has diagonal blades e and longitudinal slit-cutters d' to cut the slits 101 (shown in Fig. 8) from the lip-slot 102 made in the tube by a roll (not shown, but common in paper-bag machines) are both the same as like rolls designated by like letters in United States Patent No. 332,631, dated December 15, 1885; and I desire here to state that the two final folding-blades 10 12, the arms to which they are attached, the final folding-rolls G′ E E′, and the pasting-roll G are and may be all substantially as in the said patent, and in practice they will be actuated in substantially the manner described in the said patent. The main folding-blade p, the curved slotted guideways 59, in which the journals at the ends of the said blade travel, the links 58, one at each end of the said blade, the curved lever-arms 57, attached to the rock-shaft 56, the movement of which actuates the main folding-blade, and the nose or finger c, attached, as as herein shown, to a cross-bar c^2, are and may be all substantially as in the Knight patent, No. 220,925, dated October 28, 1879. The carrying-belt c^3 to take away the finished bag dropped from between the rolls E′ and G′ and the shaft c^4 for moving it are both common to paper-bag machines.

I will now describe my improvements, which I have added to the parts so far specifically referred to.

I have provided the machine with a tubular shaft $A^\times$, having an enlarged central part $A^{\times 2}$, which latter part surrounds the rock-shaft 56, the said enlarged part being slotted for a part of its periphery at two places $a^\times$ for the passage of the arms 57.

In the machine to be herein described the shaft 56 referred to is extended at one end out beyond the said hollow shaft $A^\times$, and receives upon it an arm $B^\times$, having a roller or other stud $B^{\times\prime}$, which roll enters a groove cut in one side of a cam-wheel $C^\times$, fast on one end of the shaft 99, carrying the roll G′, the said cam giving motion to the main folding-blade p described. The hollow shaft $A^\times$ at one end has an arm $D^\times$, provided with a suitable roller or other stud $d^\times$, which enters a cam-groove cut in one side of a cam-wheel $E^\times$, also fast on the shaft 99 referred to, the said shaft being shown broken out in Fig. 5 to save space on the drawings. The hollow shaft $A^\times$ has two arms 98, connected by links 97, (shown best in Fig. 3 and in the detail, Fig. 17,) the said links being joined to a sliding yoke 96, (shown also in said Fig. 17,) the said yoke being fitted into guideways 95 on a stationary post 94, the table-plate 93, on which the paper tube t rests, while the diamond fold for the bottom of the bag is being made, being bolted to the said post. The sliding yoke has risers w^6, extended up to a little above the level of the table-plate 93, and to each of these risers is attached one of the like radial folding-plates F, the shape of which is shown best in Figs. 1, 6, 8, and 17, they being also shown partially by full and dotted lines in other figures.

It will be understood that the bellows-folded tube t, plicated at its edges (see Figs. 8 and 10) and surrounding a former t^2, is fed therefrom in usual manner upon the table-plate and to the nose c. These radial folding-plates F, so named because they define by their edges 92 some of the radial folds in the bottom of the bag, enter and always remain in the plicated fold, the said-plates having a longitudinal movement therein of about an inch, (more or less,) they moving forward in unison with the main folding-blade and at the same speed as the blade and the feeding movement of the tube, while the said nose or finger acts under the upper ply of the leading end of the tube to lay it back in the formation of a diamond fold. In practice the edges 92 of the said plates, beveled to correspond with the angle of the radial folds 202, made in the lower ply of the tube and diagonally across the lower half of the plicated part of the edge of the tube in the formation of the square bottom, are defined by the edges 92, which hold down the lower half of the plicated fold, while the nose c acts to turn the upper ply back over the main folding-blade p.

In practice the main folding-blade in its descent upon the tube to hold the same while the tube is fed upon the nose or finger c, as in Figs. 8 and 9, and cause the upper ply of the tube to be laid back in the formation of the diamond fold, as in Figs. 11 and 12, stops in its forward movement at about the inner ends of the inclined edges 92, as best shown in Figs. 8 and 10, so that the edges 92 act to define the radial folds or creases 202 in the plicated fold next the leading end of the tube. The upper ply having been laid back by the nose over the main folding-blade, it becomes necessary to define or crease smoothly the radial fold 203 in the upper half of the plicated fold, and to do this I have provided the machine with the like radial wipers 91, which are shown in their normal position by dotted lines in Fig. 8, other intermediate positions being shown by full lines in said figure and Fig. 6, and their extreme positions in Fig. 10.

The side frames of the machine (shown partially in plan view, Fig. 1) has bolt-holes 90 to receive suitable bolts 89, by which to

attach to the frame the feet of stumps or hollow posts 88, threaded at their upper ends, as shown in the detail, Fig. 15, to receive a nut 87, which acts to keep down on said stump a sleeve 86, shaped as best shown in the detail, Fig. 14, the nut acting against the shoulder 85 of the sleeve. Each sleeve 86 at its lower end has an arm 84, provided with a roller or other stud 83, which enters a cam-groove in a hub 82, fast on the end of a rotating shaft 81, the said cam oscillating the sleeve. The upper end of each sleeve has a horizontal bracket or arm having a passage 79, (see Fig. 14,) for the reception of a rack-bar 78, preferably made partially cylindrical, the said sleeve or its arm having bearings 77 and 76, the former to receive the upper end of a rock-shaft 75, provided at its upper end with a pinion 73, to engage the teeth of the said rack-bar near its outer end, the bearing 76 receiving a short rock-shaft 72, to which is attached at its lower end a radial wiper 91, the upper end of the shaft 72 having a pinion 71, which is engaged and actuated by the teeth of the rack-bar. The shaft 75, extended down through the hollow post 88, has at its lower end an arm 69, provided with a roller or other stud 68, which enters a cam-groove in a cam-hub 67, fast on the shaft 81, the said cam rocking the said shaft, and in so doing reciprocating the rack 78 and oscillating the rock-shaft 72, with its attached radial wiper 91. By means only of the rock-shaft and rack the movement of the outer end of the radial wipers would be in the arc of a circle; but inasmuch as the fold 203 to be creased or defined in the upper half of the plicated fold is a radial straight line such curved movement of the wiper would not answer, and to move the said wiper in a radial line I at the same time rock the sleeve 86, the resultant movement of the parts being such as to cause the inner ends of the wipers in contact with the tube above the main folding-blade to travel in the dotted line *z*, Fig. 10. The main folding-blade comes down upon the top of the tube having plicated sides and above the radial folding-plates, standing always in the said plicated sides, and at the time that the main folding-blade contacts with the tube the radial folding-plates are moving in the direction of the feeding movement of the tube, and while the nose operates to turn back and over the upper ply of the leading end of the tube the said blade and plates move forward substantially in unison, the forward movement of the blade and plates stopping as soon as the diamond fold is fully laid. Each radial wiper 91 is moved toward the side of the tube, so as to enter the plicated fold just about as the nose commences to act to turn the upper ply of the tube back over the advancing main folding-blade *p*, the wiper being moved substantially from the position shown in Fig. 8 by dotted lines to that shown in Fig. 6 by the time that the radial folding plate and blade reach their forward stroke.

The feeding of the tube may be effected in any usual manner, so long as it is substantially continuous, as in the Appel patent referred to, and the bag is fed by the final fold-rollers described.

The machine herein described will be provided with any usual former, as *f*, (partially shown only in Figs. 8 and 9,) it being of any usual or suitable or well-known shape for guiding a bellows-folded or plicated tube *t*, the end of the former nearest the end of the finger *c* preferably having a spring-arm or device common to the Appel and other patents to aid in directing the open end of the tube upon the finger or nose *c*.

Believing myself to be the first to employ at the outer side of a bellows-folded tube a radial fold-wiper, I do not desire to limit my invention to the exact form or shape of such wiper or its actuating devices, so long as the wiper has a radial movement with relation to the square bottom of the bag, as described; and prior to my invention I am not aware that a radial folding-plate has ever been employed and permitted to permanently remain in the plicated fold; nor have such plates ever been used, so far as I am aware, in connection with radial wipers acting only on the outer side of the tube and moving backwardly in a direction opposite the feeding movement of the tube.

I claim—

1. A table-plate to support a bellows-folded or plicated tube, a nose or finger to enter the leading end of the tube, and a main folding-blade, combined with radial folding-plates extended partially across the said table-plate and remaining in the plicated folds of the tube under the main folding-blade, and means for moving the said folding blade and plate in the direction only of the length of the tube, substantially as described.

2. A table-plate to support a bellows-folded or plicated tube, a nose or finger to enter the leading end of the tube, a main folding-blade, and radial folding-plates located outside the tube, but within the plicated folds, combined with rock-shafts 72, the radial wipers attached thereto, swinging arms in which the said shafts have their bearings, and means to partially rotate said shafts, whereby the acting ends of the said wipers are moved in radial lines, as described, with relation to the bottom of the bag, substantially as set forth.

In testimony whereof I have signed my name to this specification in the presence of two subscribing witnesses.

NEWTON W. TAYLOR.

Witnesses:
JAY ODELL,
JOHN DENMAN.

(No Model.) 7 Sheets—Sheet 1.

F. H. KELLIHER.

MACHINE FOR MAKING PAPER BAGS.

No. 439,843. Patented Nov. 4, 1890.

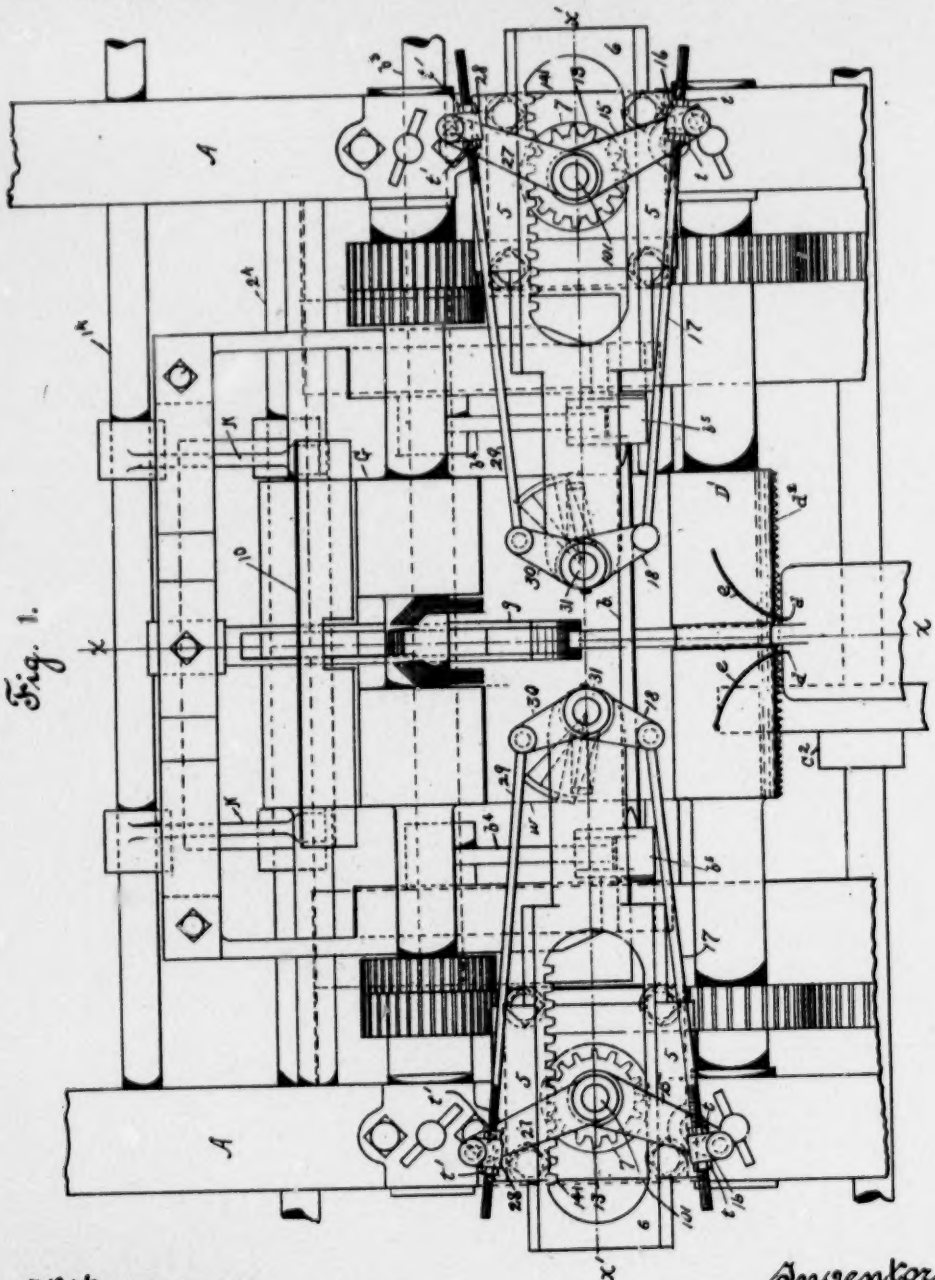

Fig. 1.

Witnesses.
Edgar A. Goddu
Frederick L. Emery

Inventor.
Frederick H. Kelliher,
by Lemley & Gregory Attys.

(No Model.) 7 Sheets—Sheet 2.

F. H. KELLIHER.

MACHINE FOR MAKING PAPER BAGS.

No. 439,843. Patented Nov. 4, 1890.

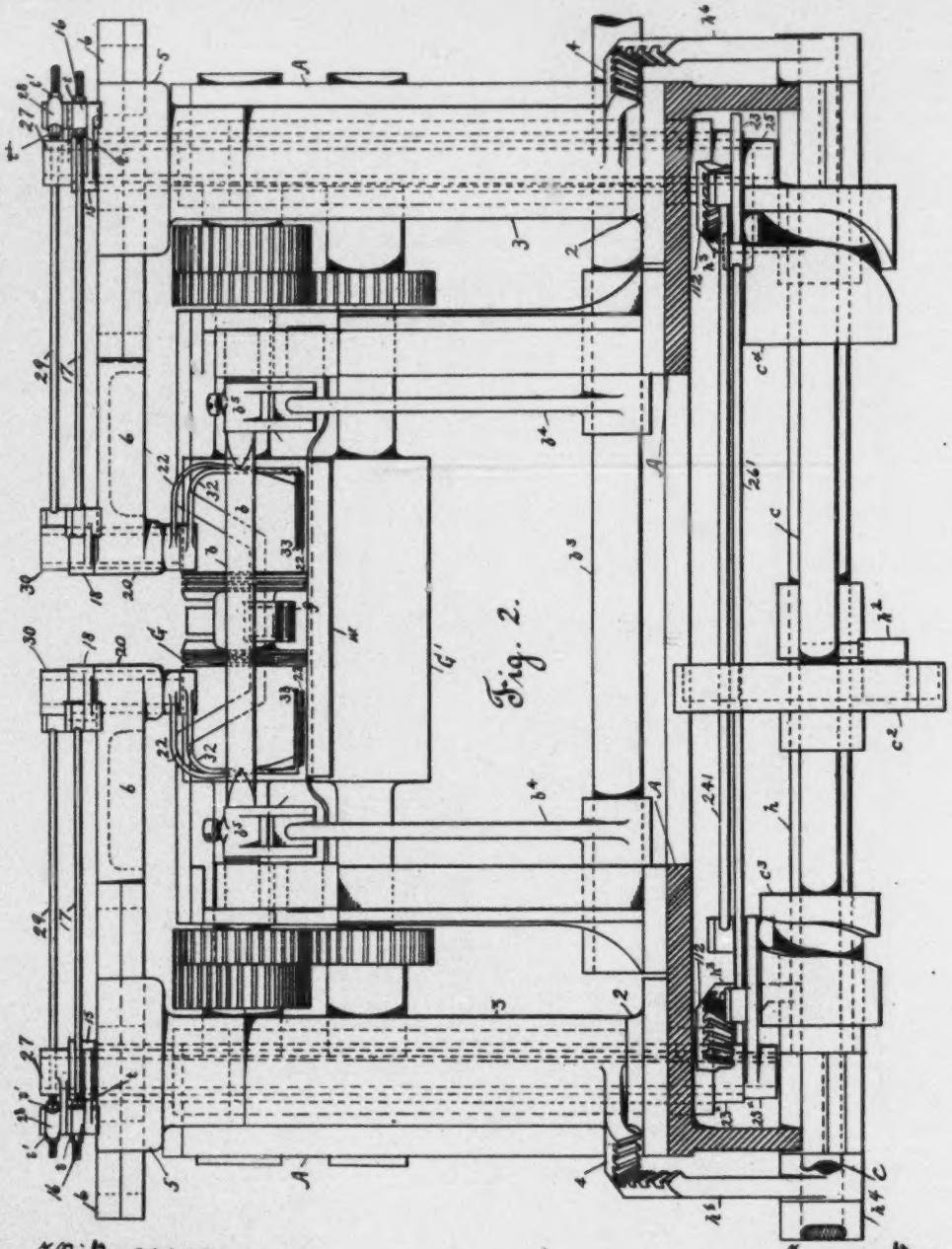

Fig. 2.

Witnesses.
Edgar A. Goldin
Edmund L. Emery

Inventor.
Frederick H. Kelliher,
by Lemby & Gregory Attys.

(No Model.) 7 Sheets—Sheet 3.

F. H. KELLIHER.

MACHINE FOR MAKING PAPER BAGS.

No. 439,843. Patented Nov. 4, 1890.

Fig. 3a.

Fig. 3.

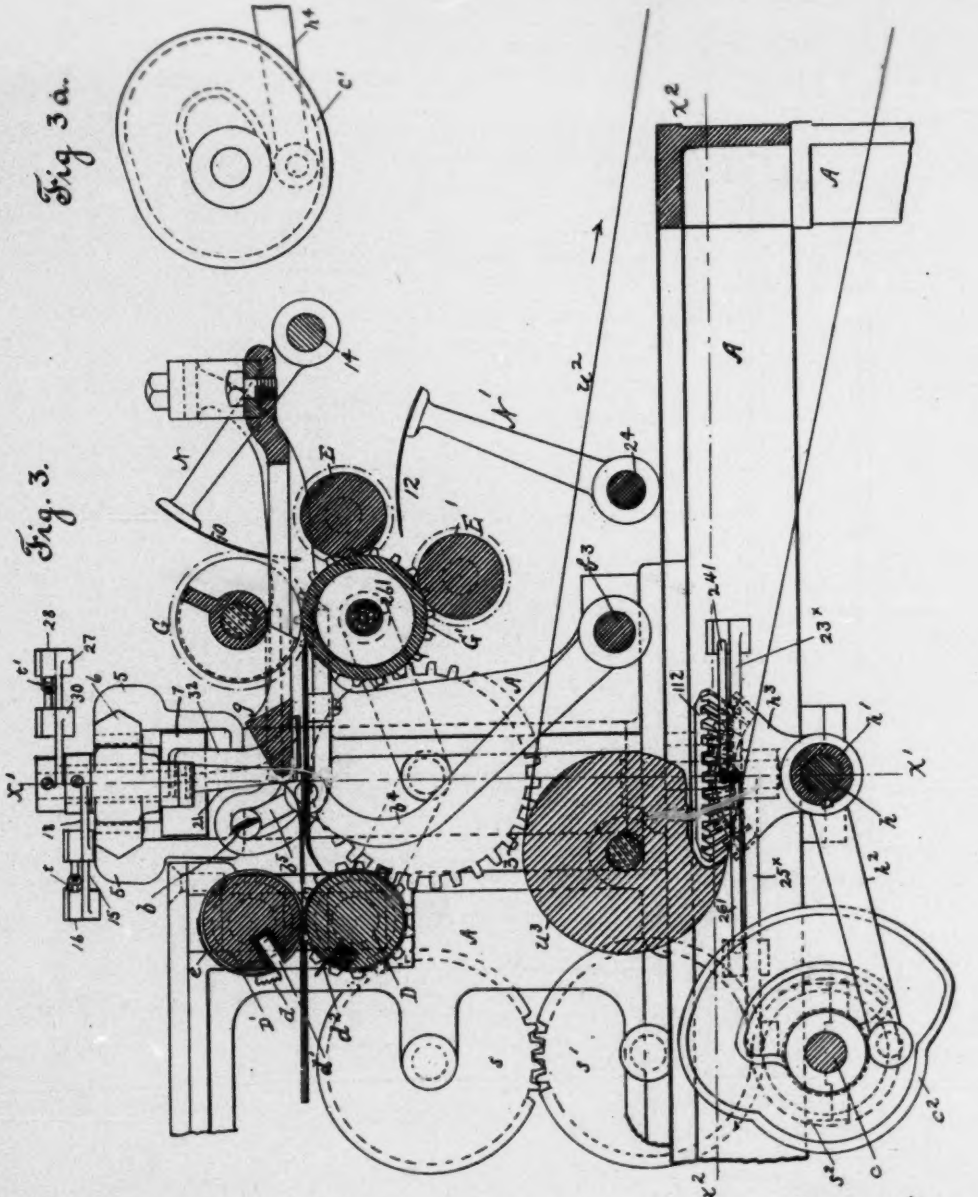

Witnesses.
Edgar A. Godden
Maurice L. Emmy

Inventor.
Frederick H. Kelliher,
by Lemby & Gregory
Attys.

(No Model.) 7 Sheets—Sheet 4.

F. H. KELLIHER.

MACHINE FOR MAKING PAPER BAGS.

No. 439,843. Patented Nov. 4, 1890.

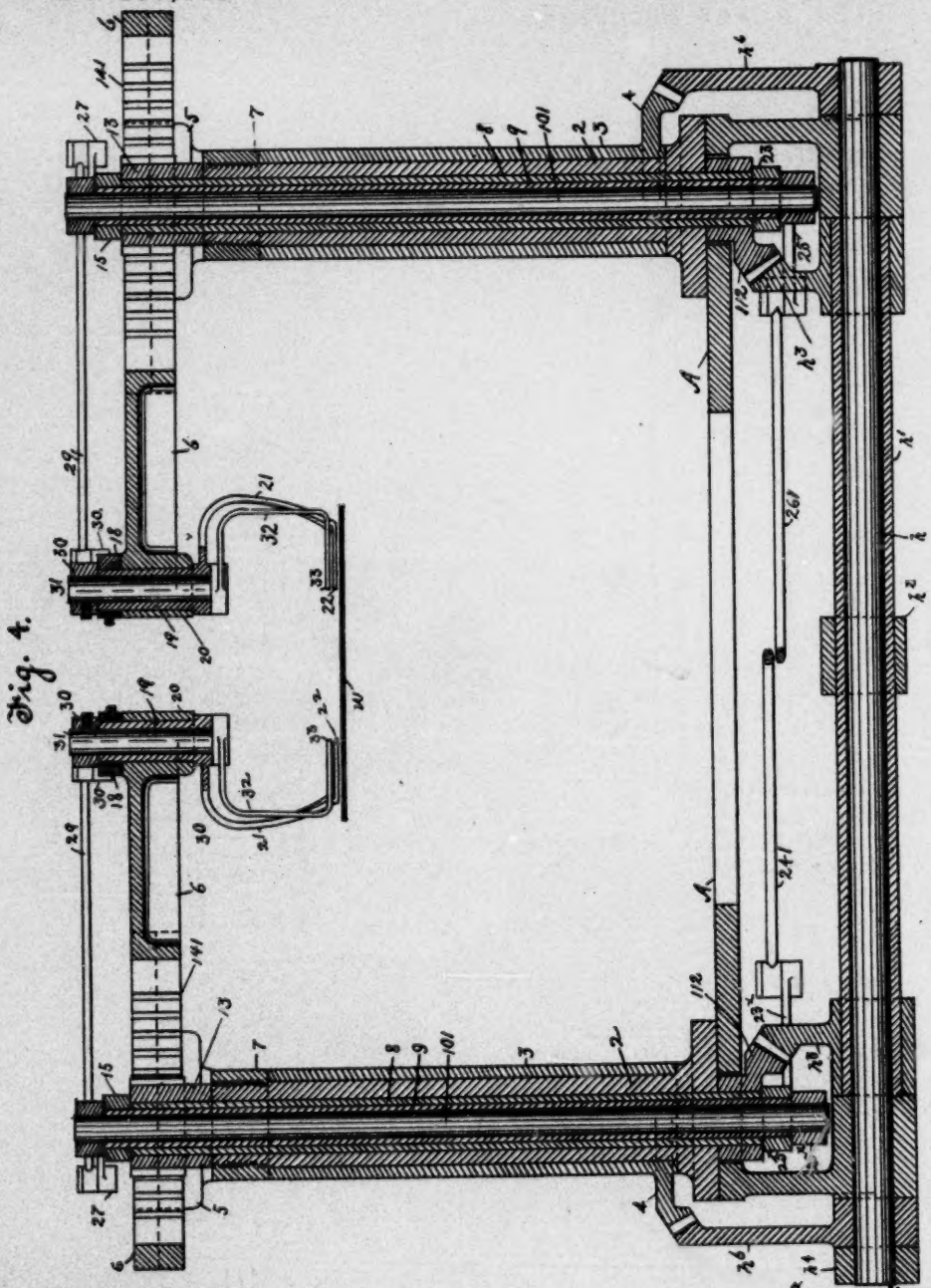

Fig. 4.

Witnesses.
Edgar A. Goldin
Frederick L. Emery

Inventor.
Frederick H. Kelliher,
by Connolly & Gregory Attys.

(No Model.) 7 Sheets—Sheet 5.

F. H. KELLIHER.

MACHINE FOR MAKING PAPER BAGS.

No. 439,843. Patented Nov. 4, 1890.

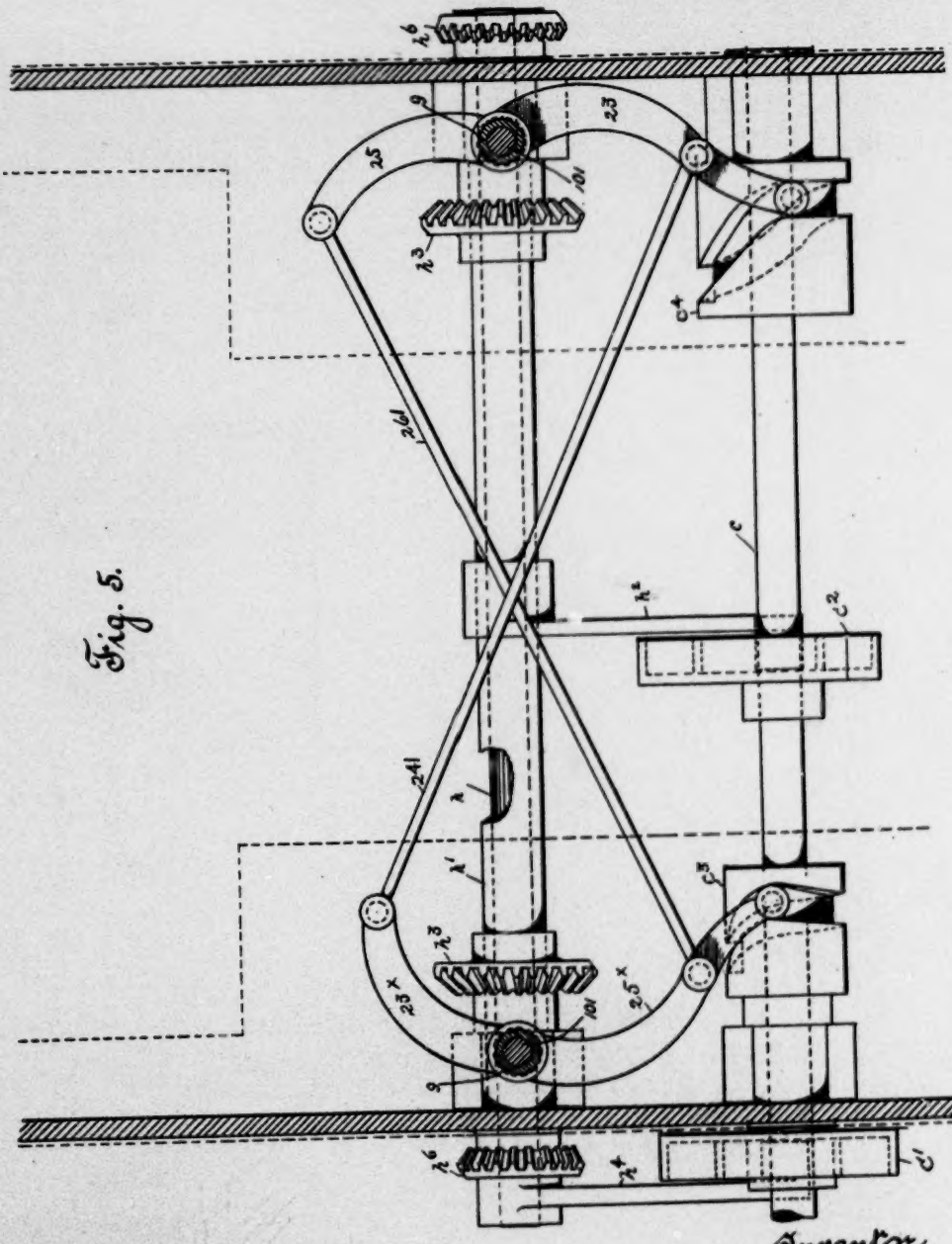

Fig. 5.

Witnesses.
Edgar A. Goddin
Frederick L. Emery

Inventor.
Frederick H. Kelliher,
by Crosby & Gregory Attys.

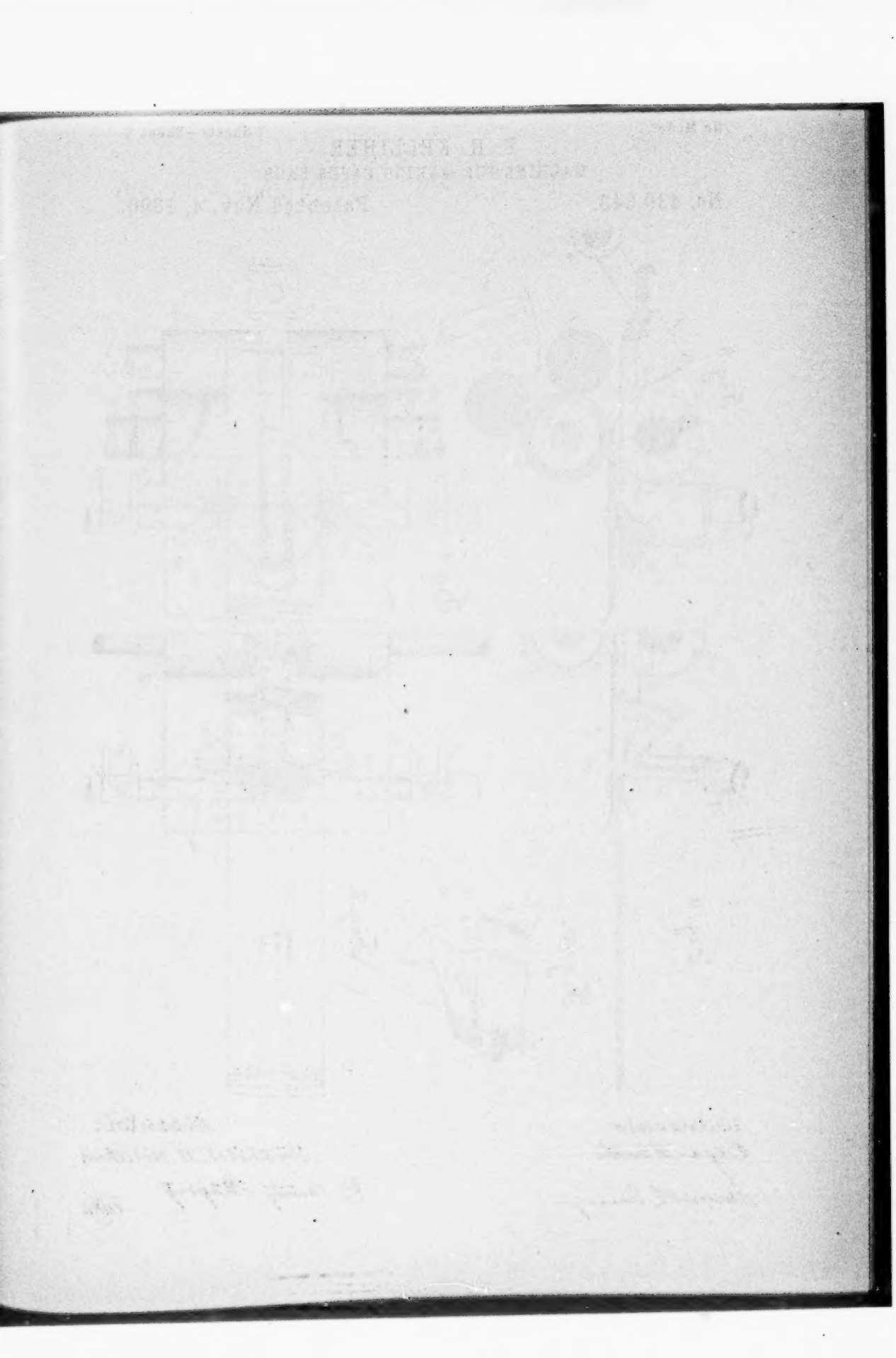

(No Model.) 7 Sheets—Sheet 6.

F. H. KELLIHER.

MACHINE FOR MAKING PAPER BAGS

No. 439,843. Patented Nov. 4, 1890.

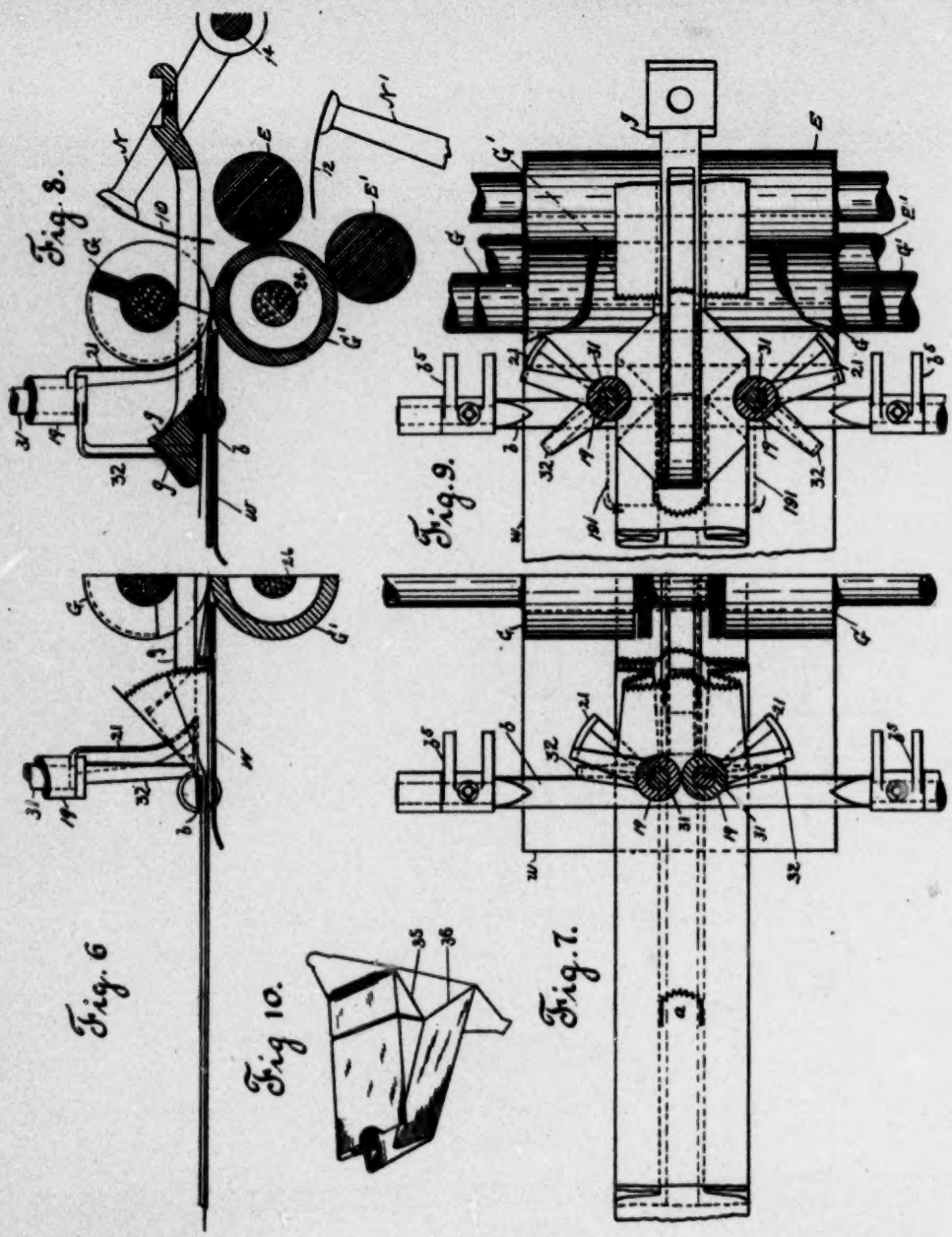

Witnesses.
Edgar A. Gaddis
Frederick L. Emery

Inventor.
Frederick H. Kelliher,
by Crosby & Gregory
Attys

(No Model.) 7 Sheets—Sheet 7.

F. H. KELLIHER.

MACHINE FOR MAKING PAPER BAGS.

No. 439,843. Patented Nov. 4, 1890.

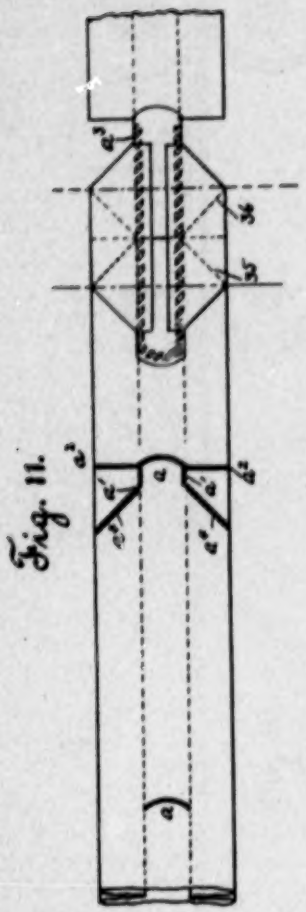

Fig. 11.

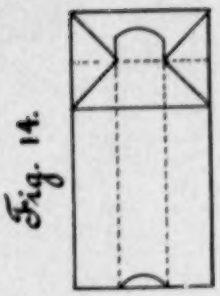

Fig. 14.

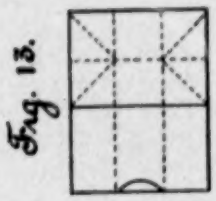

Fig. 13.

Fig. 12.

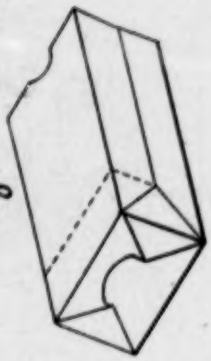

Fig. 15.

Witnesses.
Edgar A. Goddin
Frederick L. Emery

Inventor.
Frederick H. Kelliher,
by Crosby & Gregory Attys.

UNITED STATES PATENT OFFICE.

FREDERICK H. KELLIHER, OF CLEVELAND, OHIO, ASSIGNOR TO NEWTON W. TAYLOR, OF SAME PLACE.

MACHINE FOR MAKING PAPER BAGS.

SPECIFICATION forming part of Letters Patent No. 439,843, dated November 4, 1890.

Application filed March 1, 1890. Serial No. 342,253. (No model.)

To all whom it may concern:

Be it known that I, FREDERICK H. KELLIHER, of Cleveland, county of Cuyahoga, State of Ohio, have invented an Improvement in Machines for Making Paper Bags, of which the following description, in connection with the accompanying drawings, is a specification, like letters on the drawings representing like parts.

This invention has for its object to improve that class of machines for making paper bags wherein a plicated or bellows-folded tube is employed, and in which the leading end of the tube is first laid as a diamond fold in the process of forming the bottom for the bag, the bottom being completed by cross-folding.

My invention consists, chiefly, in organized means by which to define or complete the radial folds extended from the side edges of the bag toward the center of the bottom of the bag.

In my invention herein contained the said radial folds are made by two pairs of fingers adapted to oscillate about a vertical pivot made movable not only toward and from the longitudinal center of the tube, but also in the direction of the tube, while it is being fed through the machine, the free ends of the said fingers in their contracted position entering the plicated folds at the side edges of the tube, one, or it may be both, of the said fingers being thereafter oscillated, the points of the fingers standing, however, substantially together, the oscillation of the said fingers being such as to place their edges back of their free ends in the lines desired for the said radial folds, the said pairs of fingers remaining in the plicated folds while the usual nose and main folding-blade common to United States Patent No. 220,925 and to No. 332,631 act to lay the diamond fold, the said fingers being at the same time moved together horizontally in the direction of the feeding movement of the tube, so that during the formation of the bottom of the bag the feeding of the tube shall not be interrupted. The fingers form a sort of pocket in the bag at the ends of the bottom.

The machine with which I have embodied my invention contains a nose and main folding-blade substantially such as in United States Patent No. 220,925, and to complete the bottom of the bag I employ rolls and blades substantially as in the Appel Patent No. 332,631, the second blade to operate making a blind fold in the body of the bag.

Figure 1 is a top or plan view of a sufficient portion of a machine for making paper bags to enable my invention to be understood; Fig. 2, a partial end elevation, the cutter-rolls, their actuating-gear, shown in Fig. 3, and the delivery-belt roll being omitted; Fig. 3, a longitudinal section in the line x, Fig. 1, the drawing showing some of the gears as toothed for but part of their peripheries, it being, however, understood that the said gears are to be toothed all around. Fig. 3ª is a detail of the cam c'. Fig. 4 is a section in the lines x', Fig. 1, and on the line x', Fig. 3, many parts beyond the line of section being omitted; Fig. 5, a sectional detail below the line x'', Fig. 3, but with the vertical rock-shafts and their sectors removed, the outline of the bed cut off being shown by dotted lines; Figs. 6, 7, 8, and 9, details to be referred to, showing the parts embodying my invention in different positions. Fig. 10 shows a bag the bottom of which has been opened out after having been once closed, the said figure being made chiefly to show the radial folds. Fig. 11 shows a plicated or bellows-folded tube with the different operations performed upon it, part of a bag being shown at the right. Fig. 12 shows the bag end of the tube after making the first cross-fold. Fig. 13 shows the same after the second cross and blind fold. Fig. 14 shows the bag unfolded on the line of the blind fold, and Fig. 15 shows a bag fully opened for the reception of the material.

The frame-work A, of suitable shape, has suitable bearings to sustain the working parts.

Referring to the drawings, G is a paste-roll and G′ a roll below it, having a shaft 26, on which in practice may be placed any usual pulley by which to rotate the said shaft, so that it may constitute the main shaft of the machine.

E and E′ represent two rolls arranged about the roll G′; N, an arm having a blade 10; N′, an arm having a blade 12; 14 and 24, shafts to which the said arms are attached; D D′, rolls, the roll D′ having a groove d', creasers

e, and slot-cutters *d*, while the roll D has the straight blades d^2. *b* is a main folder-blade; b^5, a link; b^1, an arm; b^3, a rock-shaft, and *g* a nose. These parts or devices so far described are and may in practice be substantially the same as in United States Patent No. 332,631.

Besides the parts so far described, the machine herein to be described will have co-operating with it usual devices for forming a wide strip of paper into a plicated or bellows-sided tube, and the machine will also have a suitable lip-cutter, which may be as in the Patent No. 231,642 and of the usual form to cut a lip, as *a*, in the tube to aid in opening the mouth of the bag.

The blades *d* will in practice cut the short longitudinal slots *a'*, the blades d^2 will cut the transverse slots a^2 from the side edges of the tube far enough to meet the slots *a'* and leave the bottom strip a^3, and the creasing-blade *e* makes the radial creases a^4. (See Fig. 11.)

The parts so far specifically described or referred to by letter are not of my invention, and in practice they will derive their motion either substantially as in the said patent to Appel or by other usual and suitable gearing which it has not been deemed necessary to herein fully describe.

Upon the frame I have secured suitable boxes to sustain the shaft *c*, having two cams c' c^2 and two cam-hubs c^3 c^4. I have also provided the machine with suitable bearings for the shaft *h* and a surrounding tubular shaft *h'*. The tubular shaft *h'* has an arm h^2, provided with a suitable roller or other stud at its end, which enters the groove in the side of the cam c^2, the shape of the said groove being shown in Fig. 3. This hollow sleeve has two like toothed sectors. The shaft *h* has fast upon it at one end an arm h^4, provided at its end with a suitable roller or other stud, which enters a groove at one side of the cam *c'*, the shape of which groove is indicated in Fig. 3^a. The shaft *h* has secured to it near each end a like sector h^6.

Erected upon the frame-work at each side is a like hollow post 2, which is surrounded by a sleeve 3, having at its lower end a toothed sector 4, which is engaged by the toothed sector h^6. The upper end of the sleeve 3 has branches 5, herein represented as provided with dovetailed grooves to receive between them a sliding carriage 6, the edges of which are preferably of dovetailed shape to fit the branches 5. The sleeve 3 is kept down on the post 2 by means of a nut 7.

Inside the post I have placed two tubular shafts 8 9 and a shaft 101. The tubular shaft 8 at its lower end has attached to it the toothed segment 112, which is engaged and actuated by a toothed segment h^3. The upper end of the hollow shaft 8 has fast upon it the hub of a gear 13, which engages internal rack-teeth 141 of the carriage 6, reciprocating the said carriage. The tubular shaft 9 has fast to it at its upper end an arm 15, which is provided near its outer end with a universally pivoted or jointed stud 16, through which is extended loosely the threaded end of a rod 17, provided with lock-nuts *t* and jointed to an arm 18, the hub of which is secured by a suitable set-screw to the hollow sleeve 19, having its bearing in a hub 20 at the inner end of the carriage 6, the said sleeve 19 having attached to it at its lower end a finger 21, which is curved substantially as shown in the drawings, the inner end 22 of the said finger being adapted to enter the plicated or bellows fold at the side of the tube, while the latter rests upon the usual table-plate *w*, over which the plicated tube moves while the bag is being made, the said table-plate being common to other machines.

The lower end of the tubular shaft 9 at the right in Figs. 4 and 5 has attached to it an arm 23, provided at its end with a roller or other stud, which enters a cam-groove in the cam-hub c^4 at the right-hand side of the machine, as in Figs. 4 and 5; but the tubular shaft 9 at the left-hand side of the machine has attached to it at its lower end an arm $23^\times$, which is jointed by a rod 241 to the arm 23, the connection between the two arms being such as to oscillate the said tubular shafts 9 for equal distances, but in opposite directions.

The shaft 101 at the right-hand side of the machine (see Figs. 4 and 5) has connected to it at its lower end an arm 25, which is jointed by a link 261 to an arm $25^\times$, attached to the lower end of the shaft 101 at the left-hand side of the machine, the said arm $25^\times$ having a roller or other stud to enter a cam-groove in the hub c^3, the connection between the said arms 25 and $25^\times$ being such as to enable the shafts 101 to be oscillated for the same distances, but in opposite directions. The shafts 101 at their upper ends have connected to them arms 27, provided, as described of the arms 15, each with a jointed or pivoted stud 28, through which is extended loosely a threaded rod 29, having set-nuts *t'* and jointed to an arm 30, secured to the upper end of a shaft 31, provided at its lower end with a bent finger 32, the inner end 33 of which is adapted to enter the plicated fold of the bag just above the inner end of the finger 22. It will be noticed that the free ends 22 and 33 of the fingers 21 and 32 terminate close together in a line corresponding with the center of oscillation of the shafts 19 and 31, carrying the said fingers, so that as the said fingers are oscillated their free ends 22 and 33 remain in substantially the same relation to each other, the rear parts of the fingers separating. These fingers are shown in Figs. 6 and 9 in different positions, and in their movements of oscillation the free ends of the fingers stand one substantially over the other, the outer or bowed parts of the fingers changing their positions with relation to each other, as shown in Figs. 7 and 9. These fingers and the shafts carrying them have a horizontal movement

transverse to the length of the tube, so that the said fingers are made to enter the plicated fold at or just about as or just a little after the open leading end of the tube has been forced upon the nose, so that the said fingers in their what I shall call "closed position," as represented substantially in Fig. 7, stand in the said plicated folds, while the nose *g* (the tube being fed forward by any usual mechanism) acts upon the upper ply of the bag at its leading end to lay the said ply over and form a diamond fold as the foundation fold for the bottom of the bag—a fold substantially as represented in Figs. 11 and 12. During this operation of laying the upper ply over back to form a diamond fold the main folding-blade *b* passes under the nose *g* in usual manner, and also passes under the fingers, as shown in Figs. 7 and 9, and at the same time the finger 32 is oscillated in a direction to pass over the folding-blade opposite the direction of movement of the bag, it holding the upper ply and acting upon the upper portion of the plicated fold, so that by the time the diamond fold is fully laid the said finger 32, by change of position with relation to the finger 21, has placed the said fingers 32 and 21 in such positions (see Fig. 9) that their outer edges substantially correspond with the radial fold-lines 35 and 36, said fold-lines being at the edges of what is called the "pocket" made in the plicated fold after the diamond fold has been laid over. Fig. 9 shows, however, the fingers as having been moved outwardly or removed from the plicated folds after having defined the said fold-lines 35 and 36.

The inner ends of the carriages 6 are so moved that the shafts 19 travel in the dotted-line path represented by 191, Fig. 9, or while the fingers operate, as described, to define the radial folds the shafts carrying them are moved horizontally in the direction of the feeding movement of the tube, and the radial folds having been defined the said fingers are withdrawn from the pocket made by them in the plicated fold. By making the fingers 21 and 32 follow the tube in the direction of its feeding movement stopping of the tube during the formation of the bottom of the bag is obviated. The forward feeding movement of the two fingers together, irrespective of their oscillation, is gained by the oscillation of the tubular shafts 3; but the longitudinal motion of the fingers to cause them to enter the plicated folds, and then to be withdrawn therefrom, is effected by the gears 13 acting upon the internal racks 141.

In operation the edge of the finger 21 nearest the leading end of the bag is always presented to the bag at an angle of substantially forty-five degrees, as that is the angle upon which the radial folds 36 are made, the oscillating movement of the fingers 32 after entering the plicated folds being sufficient to place their outer edges at an angle of substantially forty-five degrees to the longitudinal center of the tube, so as to define the folds 35, the paper entering into the bellows folds and folded over the said fingers when fully expanded, leaving a pocket at each end of the bag just above its bottom, the creases or folds 35 and 36 forming the sides of the said pockets, the folds being at right angles to each other. The diamond fold for the bottom of the bag having been laid, the paper is pasted by the pasting device or roll G, of usual construction, after which the leading end of the diamond fold is cross-folded by the first folding-blade 10, leaving the bag in the condition Fig. 12, the extra speed of the rolls G′ and E with relation to the cutting-rolls D D′ being sufficient to tear across or break off the narrow connection a^3 (see Fig. 11) in the under ply of the tube just about as the folding-blade 10 meets the diamond fold. The second cross-fold and the usual so-called "blind fold" are formed by the cross-folding blade 12, which passes between the rolls G′ and E′, they leaving the bag in the condition Fig. 13, and thereafter when the bag is to be used the blind fold is removed in usual manner, leaving the bag in the condition Fig. 14, it having a satchel-bottom and plicated sides, the said bag when opened presenting substantially the appearance shown in Fig. 15. A bag of this class may be readily opened, the operator engaging one ply at the mouth of the bag by his thumb and finger and giving the bag a quick jerk. In practice the shaft *c* may be rotated in unison with the shaft of the cutting-roll D, but in an opposite direction by a gear (not shown) on the shaft of the cutter-roll outside the frame-work, and two intermediate gears *s s′*, the second one of which engages a gear s^2 (shown by dotted outline in only Fig. 3) on the shaft *c* outside the frame-work. These gears are partially shown only in Fig. 3 by dotted and full diagram lines.

I do not broadly claim forming the radial folds or creases by means of devices inserted within the bellows-folded or plicated edge of the tube.

I do not desire to limit my invention to the exact mechanical devices shown by which to reciprocate and oscillate the carriage carrying the shafts, to which the fingers 21 and 32 are connected, as they might be variously modified without departing from my invention, and so, also, I do not desire to limit my invention to the exact form of connecting devices between the vertical shafts and the shafts carrying the fingers.

The nose may be of any usual construction.

The bag having the blind fold is discharged from between the rolls G′ and E′ upon the belt u^2, extended about the roll u^3, all as usual in the said Appel patent.

I claim—

1. A paper-bag-making machine containing the following instrumentalities in combination, viz: table-plate to support a bellows-sided or plicated tube, a pair of carriages, means to actuate them longitudinally and transversely,

a pair of independent fingers connected to vertical shafts supported by said carriages, and means to oscillate the said shafts to place the said fingers in position to define the radial folds 35 36 by separating their rear portions to substantially correspond with said fold-lines, as described, during the formation of the bottom of the bag.

2. The nose, the main folding-blade, and the pairs of fingers, and the vertical shafts 19 and 31, one outside the other, combined with the carriages having bearings for the said shafts, and means to oscillate the said fingers, whereby they are oscillated in a horizontal plane between the folded or overlapping outer side edges of the plicated or bellows-folded tube, substantially as described.

3. In a paper-bag-making machine, the following instrumentalities in combination, viz: the carriages, the vertical shafts 19 and 31 arranged thereon one within the other, and the fingers 21 and 32, bent, as described, and connected to said shafts, the points or free ends 22 and 33 of the said fingers terminating in substantially the center line of the said shafts, whereby the free ends of the said fingers as the shafts are oscillated stand in substantially the same relation each to the other to enable the sides of the fingers at the rear of the said free ends to define the radial folds 35 36, substantially as described.

4. The nose, the main folding-blade, and the pairs of fingers, and the vertical shafts 19 and 31, one outside the other, combined with the carriages having bearings for the said shafts, and means to oscillate the said fingers, whereby they are oscillated in a horizontal plane between the folded or overlapping outer side edges of the plicated or bellows-folded tube, and with the rolls G′ E E′ and the two folding-blades, substantially as described.

5. The fingers, the vertical shafts to which they are attached, and the carriages 6, supporting the said shafts and provided with rack-teeth, combined with the sleeves 3 and 8 and gears 13, and with means to oscillate the said sleeves, substantially as described.

6. The fingers, the vertical shafts to which they are attached, the arms 18 and 30, the rods 17 and 29, arms 15 and 27, and the shafts 9 and 101, combined with means to oscillate the said shafts, substantially as described.

7. The shaft *c*, its cams c^3 c^4, the arms $25^\times$ and 25, and the rods 261 and 241, combined with the arms 23 and $23^\times$, and with the shafts to which the said arms are connected, substantially as described.

8. The fingers 21 and 32, the vertical shafts to which they are connected, the carriages 6, supporting the said shafts and provided with rack-teeth, the sleeves 3 and 8, the gears 13, and means to oscillate the said sleeves, combined with the arms 18 and 30, the rods 17 and 29, arms 15 and 27, and shafts 9 and 101, and with means for oscillating the said shafts, to operate substantially as described.

In testimony whereof I have signed my name to this specification in the presence of two subscribing witnesses.

FREDERICK H. KELLIHER.

Witnesses:
GEO. W. GREGORY,
EMMA J. BENNETT.

(No Model.)

5 Sheets—Sheet 1.

W. H. PATTERSON.

PAPER BAG MACHINE.

No. 446,839. Patented Feb. 17, 1891.

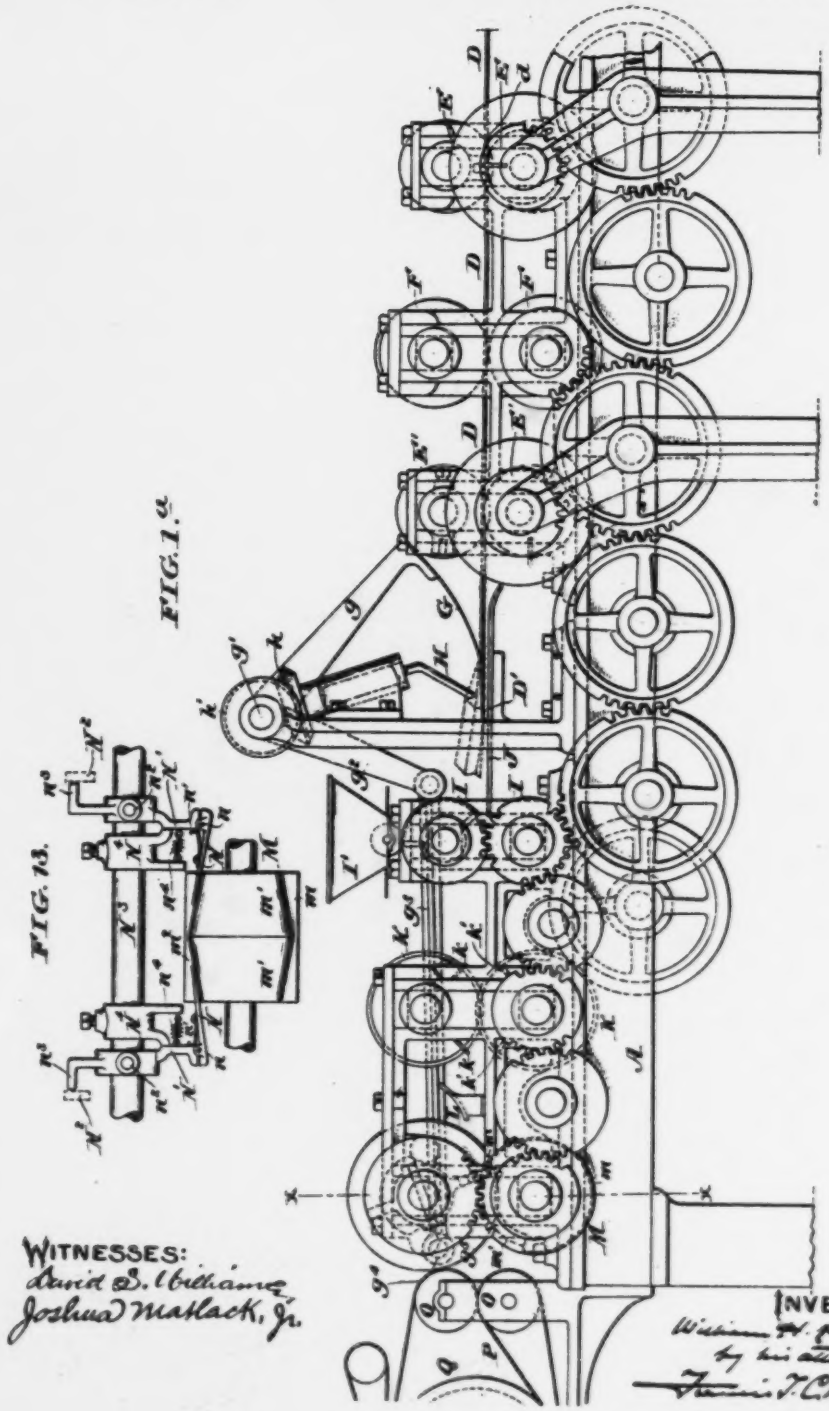

FIG. 1.

FIG. 13.

WITNESSES:
David S. Williams
Joshua Matlack, Jr.

INVENTOR:
William H. Patterson
by his attorney
Francis T. Chambers

(No Model.) 5 Sheets—Sheet 2.

W. H. PATTERSON.

PAPER BAG MACHINE.

No. 446,839. Patented Feb. 17, 1891.

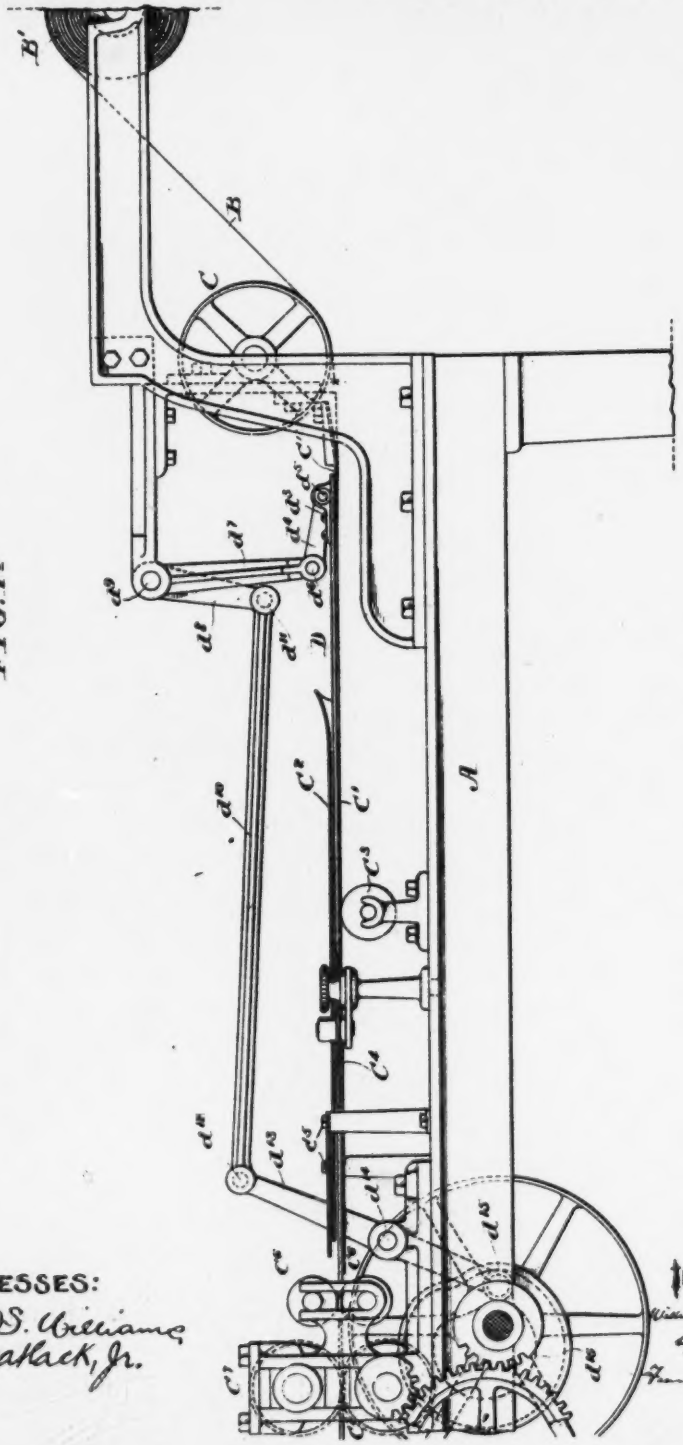

FIG. 1b

WITNESSES:
David S. Williams
Joshua Mallack, Jr.

INVENTOR:
William H. Patterson
by his attorney
Francis T. Chambers

THE NORRIS PETERS CO., PHOTO-LITHO., WASHINGTON, D. C.

(No Model.) 5 Sheets—Sheet 3.

W. H. PATTERSON.

PAPER BAG MACHINE.

No. 446,839. Patented Feb. 17, 1891.

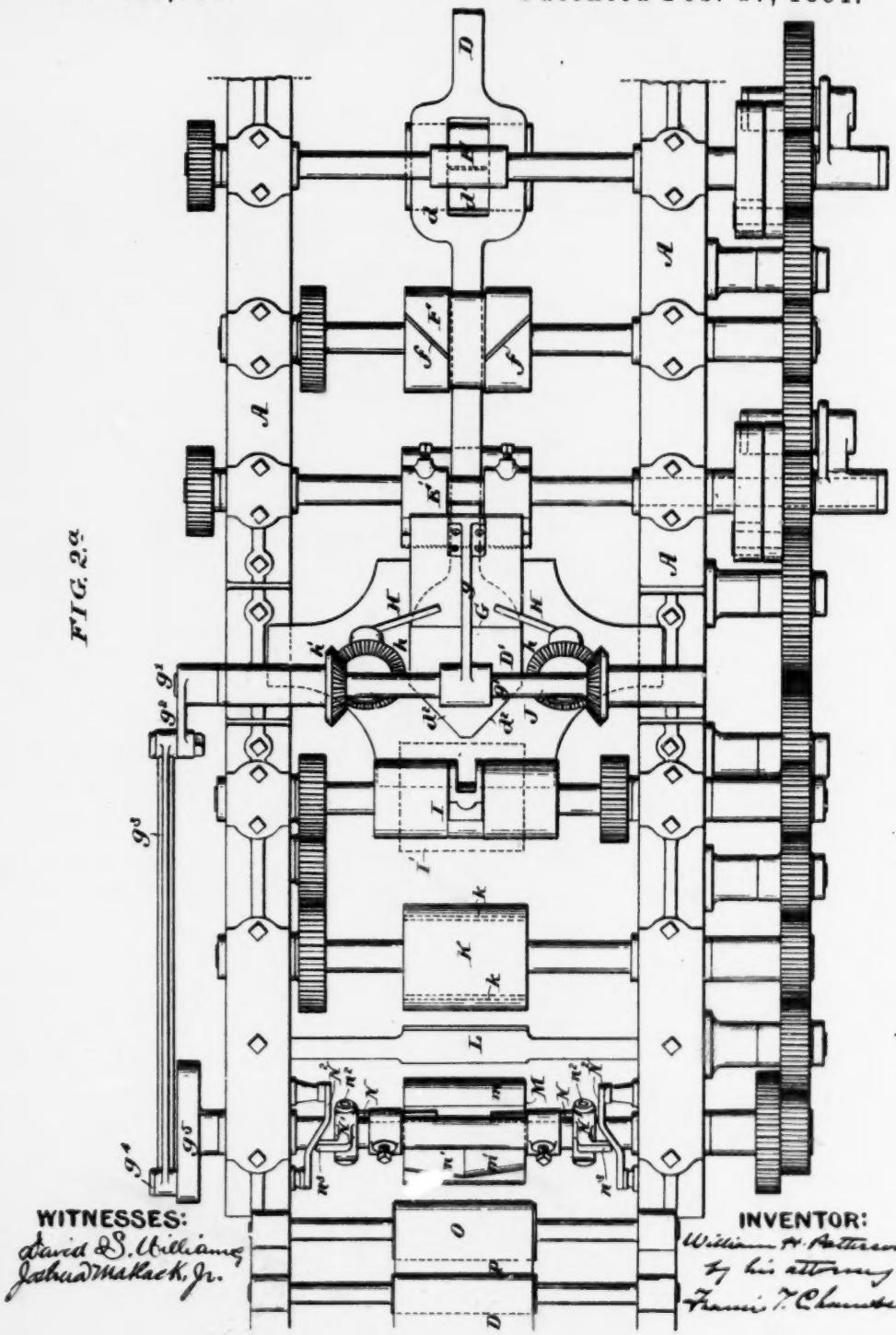

FIG. 2a.

WITNESSES:
David S. Williams
Joshua Wallack, Jr.

INVENTOR:
William H. Patterson
by his attorney
Francis T. Chambers

(No Model.) 5 Sheets—Sheet 4.

W. H. PATTERSON.

PAPER BAG MACHINE.

No. 446,839. Patented Feb. 17, 1891.

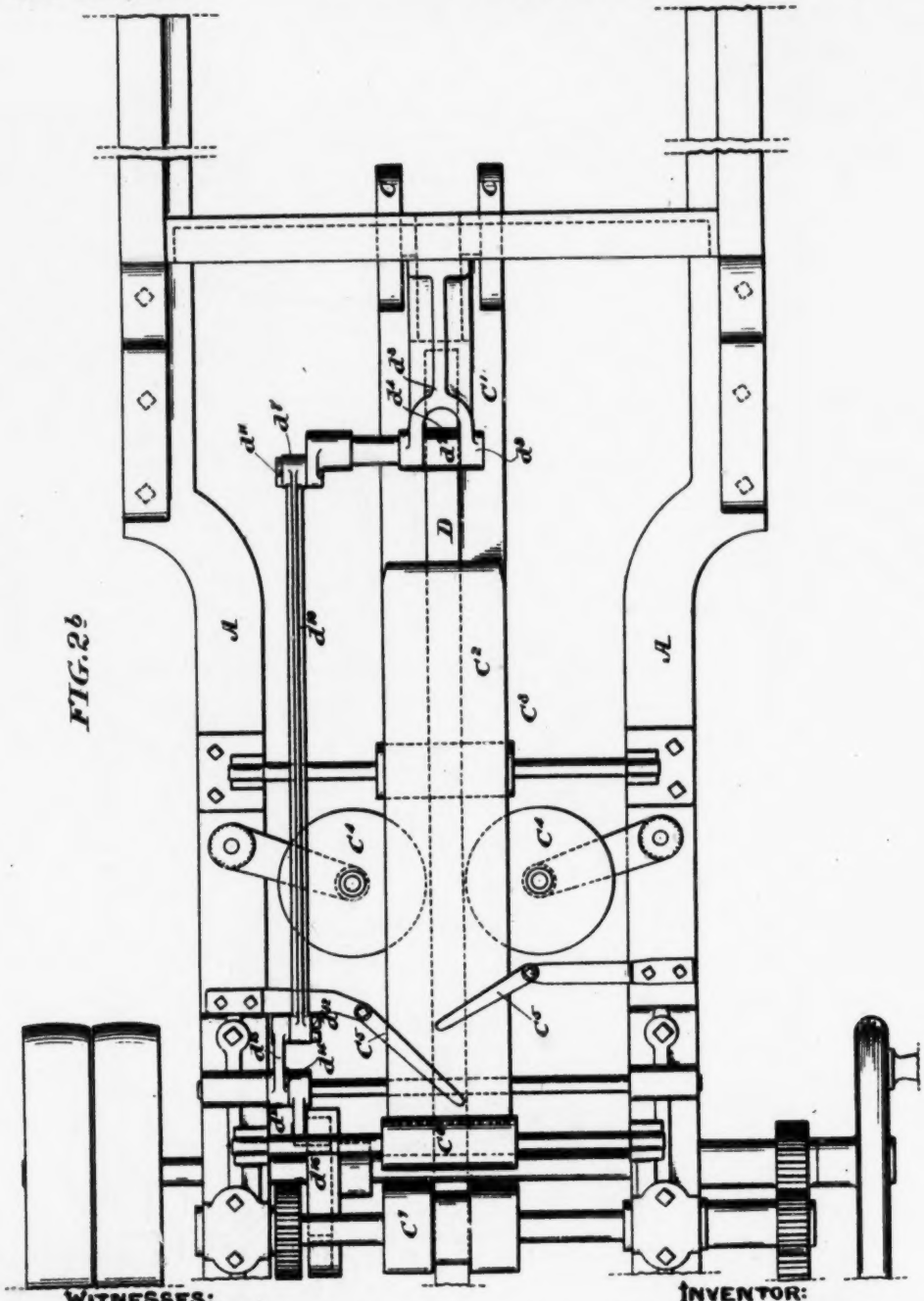

FIG. 2.

WITNESSES:
David S. Williams
Joshua Mallack, Jr.

INVENTOR:
William H. Patterson
by his attorney
Francis T. Chambers

THE NORRIS PETERS CO., PHOTO-LITHO., WASHINGTON, D. C.

(No Model.) 5 Sheets—Sheet 5.

W. H. PATTERSON.

PAPER BAG MACHINE.

No. 446,839. Patented Feb. 17, 1891.

FIG. 3.

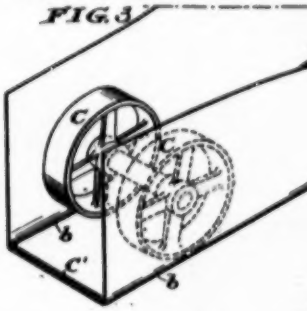

FIG. 8.

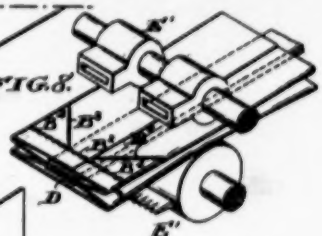

FIG. 4.

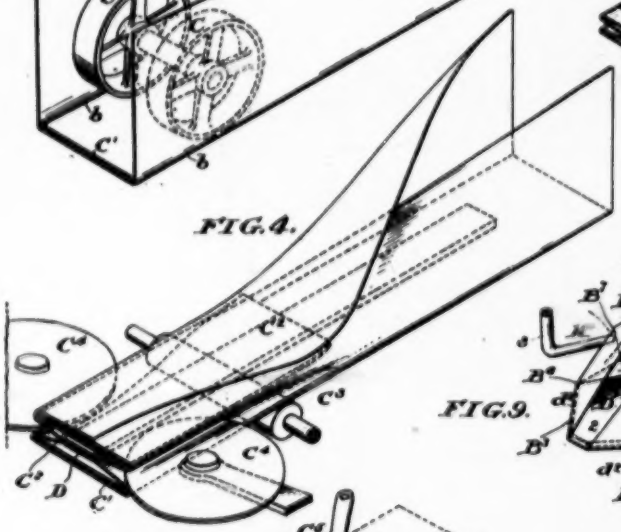

FIG. 9.

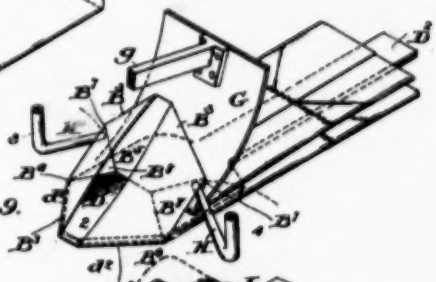

FIG. 5.

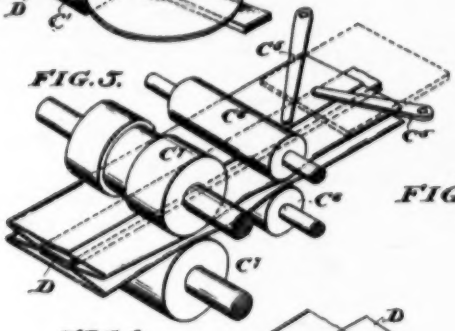

FIG. 10.

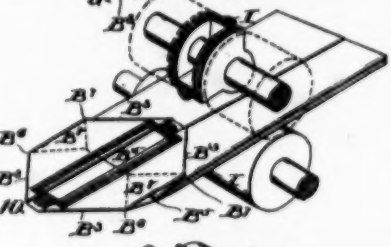

FIG. 6.

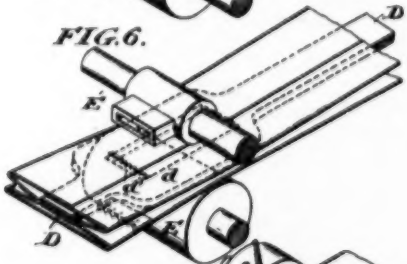

FIG. 11.

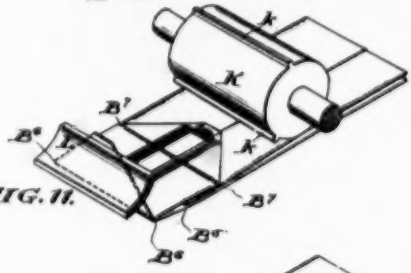

FIG. 7.

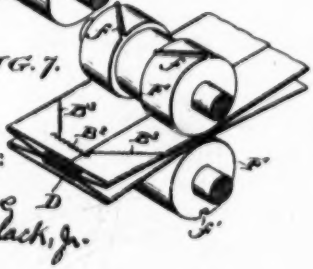

FIG. 12.

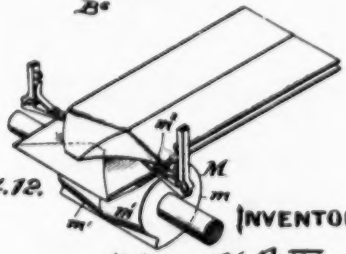

WITNESSES:

D. S. Williams

Joshua Matlack, Jr.

INVENTOR:

William H. Patterson

by his attorney

Francis J. Chambers

UNITED STATES PATENT OFFICE.

WILLIAM H. PATTERSON, OF CLEVELAND, OHIO, ASSIGNOR TO THE UNION PAPER BAG MACHINE COMPANY, OF PHILADELPHIA, PENNSYLVANIA.

PAPER-BAG MACHINE.

SPECIFICATION forming part of Letters Patent No. 446,839, dated February 17, 1891.

Application filed January 11, 1890. Serial No. 336,623. (No model.)

To all whom it may concern:

Be it known that I, WILLIAM H. PATTERSON, of Cleveland, county of Cuyahoga, State of Ohio, have invented a new and useful Paper-Bag Machine, of which the following is a true and exact description, reference being had to the accompanying drawings, which form a part of this specification.

My invention relates to the construction of machinery for making bellows-folded satchel-bottom bags such as are shown and described in Reissue Letters Patent No. 10,083, granted to the Union Paper Bag Machine Company, April 11, 1882, my object being to provide simple and efficient mechanism for manufacturing such bags.

The nature of my improvements and their mode of operation will be best understood after a description of the drawings in which they are illustrated and in connection with which the novel features will be described, as well as being clearly pointed out in the claims.

Reference being now had to the drawings, which illustrate my improvement, Figures 1^a and 1^b show in side elevation a machine embodying my invention, Fig. 1^a showing the left-hand end of the machine and Fig. 1^b showing the right-hand end of the machine. Figs. 2^a and 2^b show the plan of the machine divided in the same way, Fig. 2^a being the left-hand end, and Fig. 2^b being the right-hand end, of the machine. Fig. 3 shows in perspective the mechanism by which the first fold of the paper web is formed in folding up a bellows-folded tube. Fig. 4 shows in perspective the mechanism for completing the bellows-folded tube. Fig. 5 is a perspective view of the pressure and feed rolls for compacting the tube prior to cutting it into bag-blanks. Fig. 6 is a perspective view showing how the blank is severed in its center. Fig. 7 is a perspective view showing the creaser-rolls and their operation upon the paper. Fig. 8 is a perspective view showing the cutter-rolls, which complete the severing of the blank from the tube. Fig. 9 is a perspective view showing the mechanism which opens out the diamond fold on the end of the bellows-folded blank. Fig. 10 is a perspective view showing the pasting-roll which applies paste to the edges of the diamond. Fig. 11 is a perspective view showing the roll which creases the diamond and a device for turning down the front flap thereof. Fig. 12 is a perspective view of my device for folding down the back flap of the diamond to complete the bag, and Fig. 13 a front elevation of the said device shown in a little greater detail than in Fig. 12.

A is the frame of the machine; B, Fig. 1^b, the web of paper passing from the roll B′ to the mechanism, which converts it first into a bellows-folded tube and then into a bellows-folded satchel-bottom bag.

C C are wheels under which the web B passes, and around the edges of which it is folded up, as shown in Fig. 3.

C′ is a former-plate, beneath which the paper passes on leaving the wheels C C.

C^2 is a former-plate lying above the plate C′; C^3, a guide-roll to hold the web up against the lower former-plate C′.

C^4 C^4 are narrow wheels, which operate to push a definite amount of the paper in the blank between the plates C′ and C^2 to form the inwardly-folded or bellows sides of the tube.

C^5 C^5 are fingers, which operate to turn over and downward the upper edges of the paper to complete the bellows-folded tube.

C^6 C^6 are pressure-rolls, which operate to press the pasted seam of the paper down, in order to make permanent the tube.

In all the features above described the mechanism shown is of an old and familiar type, and need not therefore be further described.

D is a plate or rod situated between the former-plates C′ and C^2, extending back of the said plates to a point near the wheels C, which define the first folds made in the web B and attached at that end to mechanism arranged to give it a reciprocating backward and forward motion. As shown, a lug d^3 is fastened to the end of rod D, and to a pivot d^5 in said lug a link d^4 is fastened, said link being pivoted at d^6 to a lever-arm d^7, attached to a shaft d^8, which shaft is given a reciprocating oscillation through a lever d^9, to which is pivoted on d^{11} a rod d^{10}, said rod being pivoted

at d^{12} to a lever d^{14}, pivoted to the frame of the machine at d^{13} and resting at its other end d^{15} against the cam d^{16}, which said cam is formed to give the reciprocating rod D the movement hereinafter described. The rod D extends forward through the machine and terminates in a former-plate D′ and having the angular form shown in Figs. 2ª and 9—that is, its front edges d^2 and d^3 are beveled off to have the same lines as the front flap of the diamond fold which is formed on the blank in the process of making a satchel-bottom upon it.

Before describing the operation of the angular former-plate D′ in the operation of making the bag I will refer to those parts of my machine which act upon the tube and blank before the said former-plate comes into operation.

After passing the feed-rolls C^7 C^7 the tube passes between the cutter-rolls E E, a knife being secured in one roll and working in a slot in the other roll in the manner which is entirely familiar to all those who are acquainted with the art of making paper bags. At this point (see Fig. 2ª) the reciprocating rod D is broadened out, as shown at d, and a hollow place d' formed in the center of the enlargement to permit the knife-blade to pass through the center of the tube. The cutting here performed does not sever the blank from the tube, but only cuts through the center of the tube in the line in which the blank is ultimately to be severed. The blank next passes between the creaser-rolls F F, upon one of which oblique flanges f f are formed, arranged to register with and press down into the corresponding slots f' in the other roll. The projections and slots operate upon what will be the front edge of the blank when it is severed from the tube, and they are formed so as to crease the said blank on the lines in which the blank will afterward be folded in the formation of the front and back laps of the diamond. After passing between those rolls and being creased as described the tube passes between the rolls E′ E′, provided with knife-blades and slots arranged to operate upon the two sides of the tube and complete the operation of severing the blank therefrom. After passing through the last cutting-rolls the blank is delivered to the angular former D′ in such a way that the oblique edges d^2 d^3 of the said plate shall lie on the under ply of the blank in line with the creases B^3, formed thereon by the rolls F F. The cam d^{16} then operates on the system of levers, rods, &c., which connect it with the reciprocating rod D in such a way as to first push said rod and the plate D′ upon its end forward, and simultaneously with this forward motion of the rod and plate the tucker G and fingers H H come into operation. The said tucker G is fastened to the end of an arm g, which is pivoted on a shaft g', said shaft being given an oscillating reciprocating movement by means of a lever-arm g^2, actuated by a rod g^3, attached to a crank-pin g^4 on a rotating disk g^5. It is formed and actuated so as to come down upon the blank along the line B^3, Figs. 9, 10, and 11, upon which the diamond is spread out and to move forward with the blank and the plate D′ maintaining its position upon it approximately upon said line B^3 until the diamond is substantially defined.

H H are fingers, which are arranged to engage the upper ply of the blank beneath its inwardly-folded edge at or near the points B^7, at which the front flap of the diamond of the opened blank terminates and at which the inwardly-folded triangular flap which distinguishes this kind of bag begins. The corresponding corners on the lower side of the paper are marked B^6 B^6 and are defined by the corners of the angular plate D′. The fingers H H sweep backward, turning the upper ply of the paper back over the edge of the tucker G and upon the line B^3. In doing this they form the inward triangular folds B^8 B^8, the corners B^6 and B^7 of which are defined by the corner of the former-plate D′ and by the folds D^3 D^3 previously made in the blank. The upper flap of the diamond folds on the lines B^3 B^3, which are already creased, and by the coaction of the former-plate D′, the tucker G, and the fingers H H, the diamond is spread out, and it is thus defined, as shown in the drawings.

The mechanism shown for actuating the fingers H H is best seen in Figs. 1ª and 2ª. Said fingers are attached to miter-wheels h, which are rotated by connecting miter-wheels h' h', secured on a shaft running transversely to the machine. By this plan the fingers H H have a continuously rotating action, making, of course, one rotation for each blank passing through the machine and acting upon the blank in their backward sweep over the plate D′ and tucker G. As their action in the mechanism shown is simultaneously with the forward movement of the blank and the former-plate D′, their engagement with the paper is but for a short time. Obviously, however, they could be used with a stationary former-plate and a tucker, which is stationary while they are in operation; but I prefer to have all three of the instrumentalities move in the manner as heretofore described.

The mechanism which actuates the plate D′ and its rod D retracts the said plate and rod after the diamond is formed, and the diamond-folded blank then passes between rolls I I, the upper one of which is a paster-roll, which applies paste to the edges of the diamond, as shown in Fig. 10. I′ indicates the paste-vat which feeds this upper paster-roll. The blank then passes between creaser-rolls K K, the upper one of which is provided with projecting ribs k k, registering and fitting into crease k' k' in the lower roll and so placed as to crease the blank on the lines B^7 B^7 and B^6 B^6, thus defining the final folds upon which the front and back laps of the diamond are folded down in order to complete the bag-bottom.

From the rolls K K the blank, with the laps of the diamond projecting upward, passes beneath an angularly-set plate L, which engages the front lap of the diamond and folds it back upon the creased line B^6 B^6 and down upon the center of the diamond fold, after which the blank passes over the roll M, which, together with coacting mechanism, is arranged to fold down the back flap of the diamond and complete the back. This roll M is made up of two parts, one m being the segment of a cylinder and the other m' m' made up of conical segments set with their bases together in the center of the roll. Above the roll M is a shaft N^3, to which are secured brackets N^4, and upon these brackets are pivoted at n^2 arms N′, with projections extending above and below their pivots. Upon one end of these pivoted arms are secured fingers N N, pivoted to the arms at n n and provided with springs n' n', which tend to push the fingers N downward. Springs n^4 n^4 tend to draw the arms N′ inward, as shown, and projections n^3 n^3 on the other ends of arms of N′ are arranged to come in contact with cams N^2 N^2, said cams, together with the springs n^4 n^4, governing the position of the arms N′. To explain now the operation of this device I will state that the blank is fed onto the roll M so that the line B^7 B^7 and the crease formed along this line will extend over the edge m^2 of the cylindrical part of the roll. As the roll M rotates and the shaft N^3 also rotates, the cams N^2 are formed so as to push the upper ends of the pivoted arms N′ inward, and consequently to push the fingers N N downward, and the said fingers come down upon the blank just inside of the line B^7 B^7. The backward flap of the diamond is already bent upward slightly, a crease formed along the line on which it is to be folded. The pressure of the fingers, together with the shoulder formed upon the roll M between the cylindrical and conical parts thereof, has the effect of throwing the back flap of the diamond upward, and as the downward pressure of the finger ends continues the bottom of the blank is bent on the conical face m' m' of roll M, and the back flap in consequence of this bending folds down upon the center of the diamond and upon the front flap already folded down thereon, the finger ends being withdrawn as soon as this fold is completed by the action of the cams N^2 N^2. After leaving the roll M the blank passes between presser-rolls O O, which press down the seams of the bottom, and it then travels on the blade P around the drying-cylinder Q and is delivered as a completely folded and pasted bag.

I have shown in the drawings gearing connected with the frame of the machine and the various operative parts thereof; but as such gearing may be modified in any convenient way I have not thought it necessary to describe the same, and I would also state that any convenient feeding and guiding devices can be used for carrying the blanks into and through the various parts of the machine which operate upon them in forming the bag. Such devices are familiar to all bag-manufacturers.

Many of the operative features of my improved machine are obviously capable of separate as well as conjoint use.

Having now described my invention, what I claim as new, and desire to secure by Letters Patent, is—

1. In a paper-bag machine, the combination of an angular former-plate D′, arranged to lie on the inside of the under ply of a bellows-folded bag-blank, with a tucker G, operating to define the line on which the diamond is opened, and fingers H, arranged to engage the upper ply of the blank beneath its inwardly-folded edge, and operated by mechanism which gives them a backward sweep, all substantially as described.

2. In a paper-bag machine, the combination of an angular former-plate D′, arranged to lie on the inside of the under ply of a bellows-folded bag-blank, with creasing-rolls F F, arranged to crease the end of the blank on the lines on which it folds to form the points of the diamond when opened up, a tucker G, operating to define the line on which the diamond is opened, and fingers H, arranged to engage the upper ply of the blank beneath its inwardly-folded edge, and operated by mechanism which gives them a backward sweep, all substantially as described, and so as to spread out the diamond.

3. In a paper-bag machine, the combination of a reciprocating angular former-plate D′, arranged to lie on the inside of the under ply of a bellows-folded bag-blank, with a tucker G, operating to define the line on which the diamond is opened, and fingers H, arranged to engage the upper ply of the blank beneath its inwardly-folded edge, and operated by mechanism which gives them a backward sweep, all substantially as described, and so as to spread out the diamond.

4. In a paper-bag machine, the combination of mechanism for forming a bellows-folded tube, a tongue extending from said mechanism, rolls F F, arranged to crease the bellows-folded blank on the lines on which the paper folds to form the points of the diamond when opened out and at the corners where said folds terminate, said rolls being arranged to operate on the blank on each side of the tongue aforesaid, and mechanism situated at the end of said tongue, arranged to fold back the end of the tube, so that a diamond fold will be formed thereon with parallel side folds between the creased corners.

5. In a paper-bag machine, the device for turning down the back flap of the diamond fold, consisting of a roll M, having a segment m' m' in the form of conical segments set base to base in the center of the roll, and a segment m, of cylindrical form, in combination with fingers N, secured on pivoted arms,

and a shaft X^4 and cams X^2, arranged to actuate said arms and fingers, all substantially as and for the purpose specified.

6. In a paper-bag machine, the device for folding down the flaps of a diamond-folded bag-blank, consisting of creasing-rolls K K, arranged to crease the diamond on the lines on which the said flaps are folded down, an angular plate L, acting to turn down the front flap, and the device for turning down the back flap of the diamond fold, consisting of a roll M, having a segment m' m' in the form of conical segments set base to base in the center of the roll, and a segment m, of cylindrical form, in combination with fingers N, secured on pivoted arms, and a shaft X^4 and cams X^3, arranged to actuate said arms and fingers, all substantially as and for the purpose specified.

WILLIAM H. PATTERSON.

Witnesses:
LEWIS R. DICK,
H. W. HARE POWEL.

(No Model.) 4 Sheets—Sheet 1.

L. C. CROWELL.

PAPER BAG MACHINE.

No. 510,410. Patented Dec. 12, 1893.

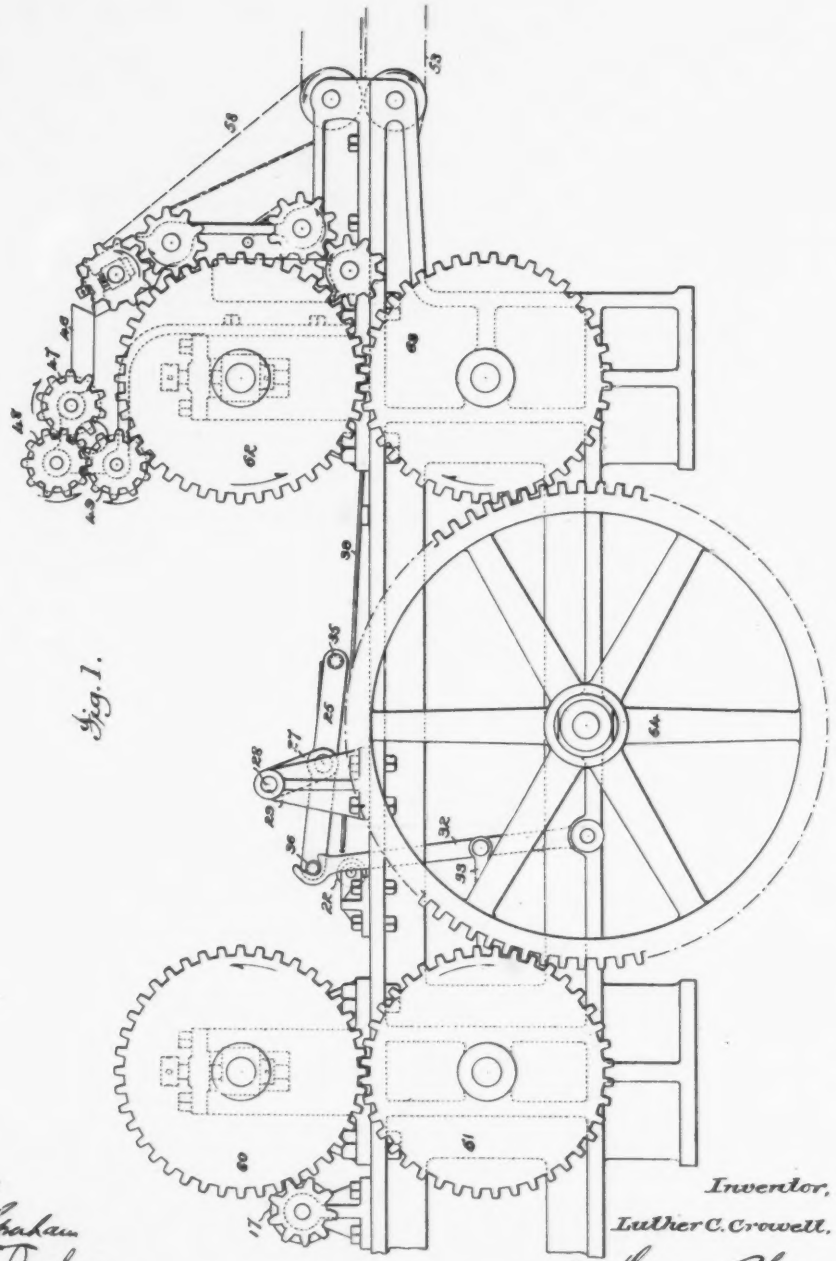

Fig. 1.

Attest;
Geo. H. Graham
A. D. Jastera.

Inventor,
Luther C. Crowell,
by Munn & Philipp
Att'ys

(No Model.) 4 Sheets—Sheet 2.

L. C. CROWELL.

PAPER BAG MACHINE.

No. 510,410. Patented Dec. 12, 1893.

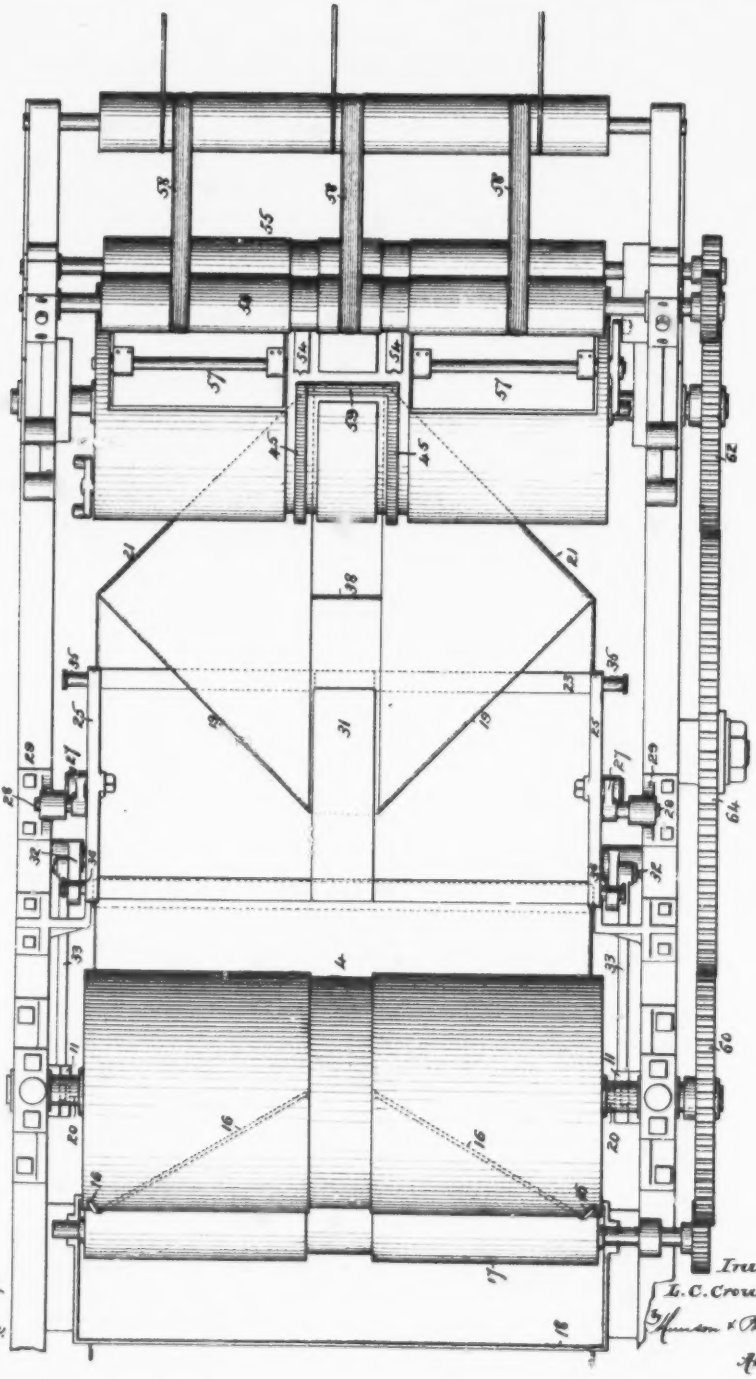

Fig. 2.

Attest;
Geo. H. Graham
A. N. Jasbera

Inventor,
L. C. Crowell,
by Munson & Philipp
Attys.

(No Model.)

4 Sheets—Sheet 3.

L. C. CROWELL.

PAPER BAG MACHINE.

No. 510,410. Patented Dec. 12, 1893.

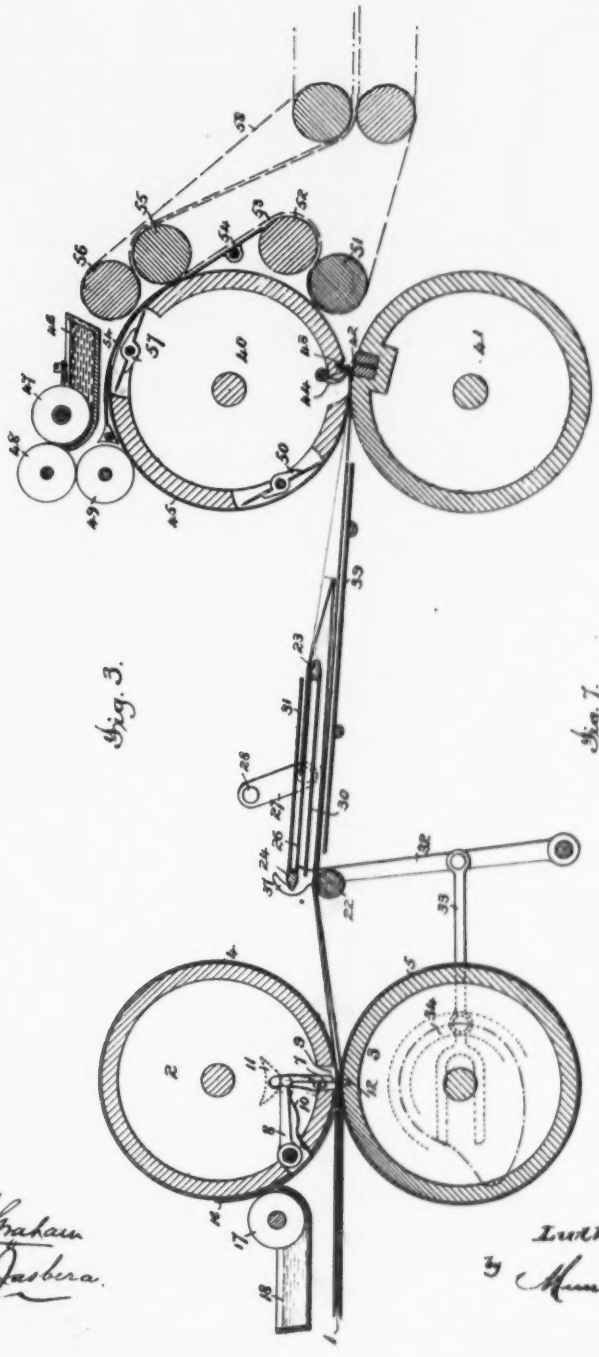

Fig. 3.

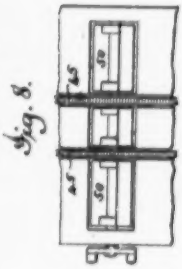

Fig. 8.

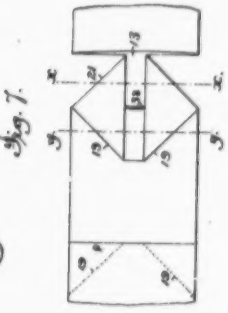

Fig. 7.

Fig. 6.

Attest;

Geo. H. Graham

A. F. Jasbera.

Inventor,

Luther C. Crowell

by Munson & Philipp

Attys.

(No Model.) 4 Sheets—Sheet 4.

L. C. CROWELL.

PAPER BAG MACHINE.

No. 510,410. Patented Dec. 12, 1893.

Fig. 4.

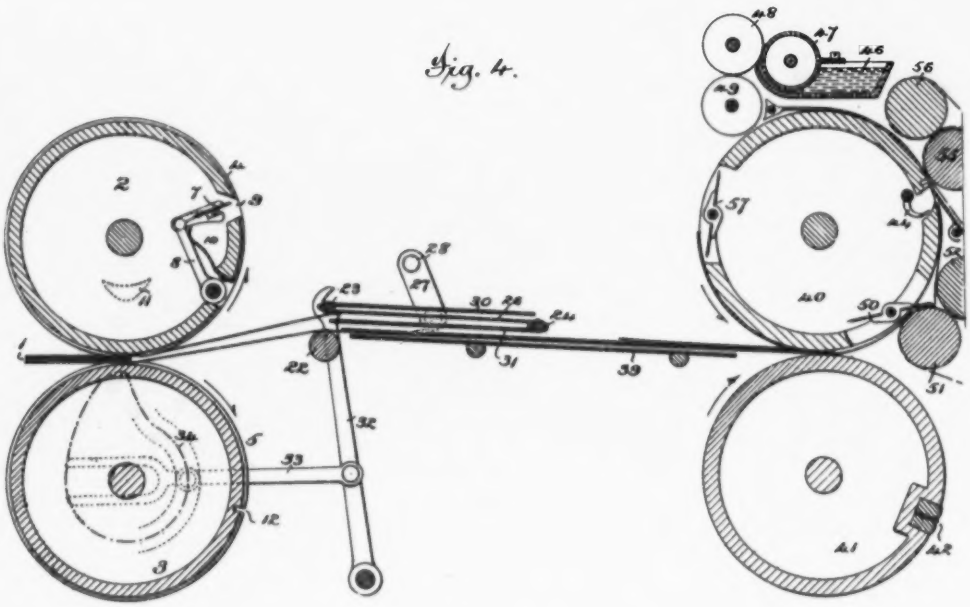

Fig. 5

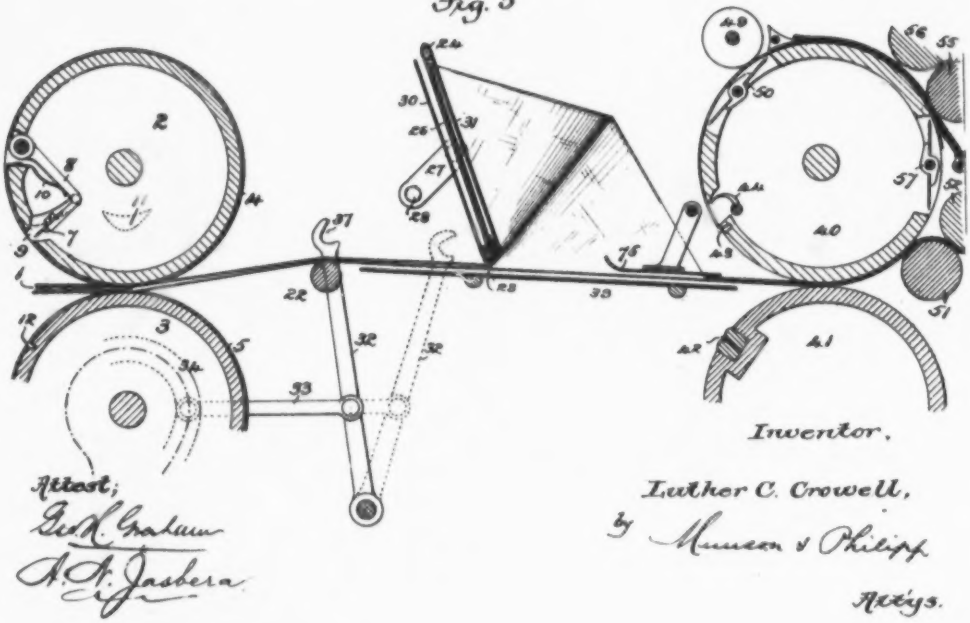

Attest;
Geo. L. Graham
A. S. Jasbera

Inventor.
Luther C. Crowell,
by Munson & Philipp
Attys.

UNITED STATES PATENT OFFICE.

LUTHER C. CROWELL, OF BROOKLYN, NEW YORK.

PAPER-BAG MACHINE.

SPECIFICATION forming part of Letters Patent No. 510,410, dated December 12, 1893.

Application filed July 11, 1892. Serial No. 66,391. (No model.)

To all whom it may concern:

Be it known that I, LUTHER C. CROWELL, a citizen of the United States, residing in the city of Brooklyn, county of Kings, and State of New York, have invented certain new and useful Improvements in Paper-Bag Machines, fully described and represented in the following specification and the accompanying drawings, forming a part of the same.

The present invention relates to the manufacture of "satchel-bottom" bags from a continuous tube of paper by a method involving that step known as the formation of the "diamond fold."

The invention has for its object the organization of a mechanism for producing these bags, which shall be simpler in its construction, more rapid and reliable in its operations, and less expensive than those heretofore in use.

To that end the invention consists principally in a method of and means for defining the fold lines for the edges or outline of the diamond, and in devices for opening the end of the tube to diamond form.

It also embraces certain features of the apparatus for folding the points of the diamond to close the bag bottom, and certain other features of construction, both singly and in various combinations, as will be hereinafter fully explained and particularly pointed out.

In said drawings: Figure 1 is a side elevation, Fig. 2 a plan, and Fig. 3 a longitudinal vertical section of a mechanism embodying the invention. Figs. 4 and 5 are sectional views showing the parts in different positions for the purpose of illustrating their operation in the formation of a bag. Fig. 6 is a side view of the cutting blade; Fig. 7 a plan view of the tube after it has been opened to the diamond form, and Fig. 8 a side view of the first folding blade.

The tube from which the bags are made, after being formed in any of the well known ways, passes over the extended end of the former or a guide 1 into the bite of the cutting and folding rolls 2—3. These rolls are provided with circumferential depressions 4—5 which, for a purpose to be hereinafter explained, permit the narrow end 6 (see Fig. 6) of the former or guide to extend forward to the bite of the rolls. The upper roll, 2, is provided with a severing blade 7 which is fixed at each end to arms 8 pivoted upon the interior of the roll in such manner that they can be rocked so as to cause the blade to oscillate in and out through a longitudinal slot 9 in the roll. The arms 8 are controlled by springs 10 so as to normally hold the blade retracted, but as the roll revolves studs 20 upon the arms are brought into contact with fixed cams 11 whereby the blade is forced outward so as to coact with groove 12 of roll 3 and sever the tube, except the small portion 13 of the lower ply, (see Fig. 7) which remains uncut because of the recess in the center of the cutting blade. This recess is of such depth that while the portions 15 of the blade (see Fig. 6) pass through both plies of the tube and into the groove 12, the portion 14 will not reach the lower ply, but will simply pass across the end of the former or guide and through the upper ply. The roll 2 is also provided upon its periphery with projections 16 of felt or other absorbent elastic material, which, as the roll revolves, receive moisture from the absorbent roll 17 supplied with water from the fountain 18. The projections 16 are so located upon the roll (see Fig. 2) that in passing in contact with the tube they will moisten its upper ply upon the lines 19 which are to become the fold lines of the diamond. (See Fig. 7.) This moistening renders the paper so limp that it will readily fold upon these lines and form an accurate diamond without the aid of any mechanical devices for determining the lines of fold. The roll 3 may if desired be provided with a similar apparatus for moistening the lower ply of the tube to determine the fold lines 21, but the moistening of the upper ply will usually be found sufficient.

In working some kinds of paper it may be found desirable to allow a short time for the water to soak into the paper before the tube reaches the diamond fold forming apparatus. In such the moisture may be applied by an independent pair of rolls located in the rear of the cutting rolls, and these rolls may be arranged to act upon the paper either before or after the tube is formed. The tube after leaving the rolls 2—3 passes slightly upward and then forward across a guide 22, which is preferably a roll, as shown, but may be a rigid bar,

by which it is so bent that its severed upper ply will stand slightly away from the lower ply, thereby opening the mouth of the tube. This raising of the upper ply permits it to pass into the control of the diamond fold forming apparatus which will now be explained. This apparatus consists of a light rectangular frame composed of two bars 23—24 connected at their ends by cross pieces 25 and at their centers by a narrow plate 26. The cross pieces 25 are pivotally connected at their centers to swinging arms 27 which depend from studs 28 fixed in brackets 29 at the sides of the machine. The bars 23—24 are also provided respectively with narrow plates or fingers 30—31 which extend from the bars so as to lie upon the opposite sides of and parallel with the plate 26, but at a short distance therefrom. The ends of the bars 23—24 extend slightly beyond the cross pieces 25 and form studs 35—36, which are alternately operated upon by the forked ends 37 of the oscillating levers 32. The bend of the tube in passing over roll 22 will be such, as already explained, as to raise the upper ply and cause it to enter and pass forward between the plate 26 and finger 31, as shown in Fig. 4. When the advancing end of this ply has entered a sufficient distance between the plate and finger, the levers 32, actuated through links 33 from cams 34 upon the shaft of roll 3, will begin to advance and carry forward the diamond fold forming apparatus at a speed equal to the feed of the tube. As this apparatus is carried forward it will swing upon the arms 27 so that its forward portion will be raised and carried backward, describing substantially an arc of a circle, and carrying the upper ply of the tube with it. When the apparatus has been thus carried to a vertical or slightly beyond a vertical position, the levers 32 will be drawn backward, leaving the mouth of the tube distended, as shown in Fig. 5. From this position the bar 23 will be carried forward by the feed of the tube and the bar 24 will be gradually lowered until it finally falls into the forks 37 of the levers 32, thus reversing the apparatus and bringing the bar 24 and finger 30 into position to act upon the bottom forming portion of the next blank, as shown in Figs. 3 and 4. It will be observed that after leaving the guide roll 22 the tube passes across a plate 39, by which it is sustained against the weight of the diamond fold forming apparatus.

It will readily be seen that in the operation just described, the upper ply of the tube will be folded backward across the bar 23 to form the central transverse fold 38 of the diamond, and its sides will be drawn inward so as to form the folds upon the lines 19 and 21. As the feed of the tube continues this operation will be repeated at regular intervals and diamond folds will be formed in the tube at the distance of a bag length apart.

The principal advantages of the diamond fold forming mechanism just described are due to the simplicity both of its construction and operation and to the fact that its movements are positive and such that the fold is laid without subjecting the material to any strain whatever.

Instead of being pivoted to the swinging arms 27, the cross pieces 25 may be provided with studs which work in cam grooves of the proper form to guide the frame in its movements. The cross-plate 26 as will readily be seen is not absolutely essential and may be dispensed with if desired. The diamond fold having been formed as just described, the tube passes to rolls 40—41 which are provided with devices for performing the operations necessary to complete the bag, the rear point of the diamond being held in proper position during such passage by the suspended guide plate 75 beneath which it passes. The roll 41 is provided with a cutting blade 42 which coacts with a groove 43 upon the roll 40 to sever the small portion 13 of the tube which up to this point has remained uncut. Just in the rear of the groove 43 the roll 40 is provided with a set of pins 44 which are protruded at the time the part 13 is cut, so as to impale the front point of the diamond and carry it around upon the roll 40. In the rear of the pins 44 the roll is provided with pasting ridges 45—59 which as the roll revolves apply paste to the proper portions of the diamond. The paste for this purpose is supplied to the ridges from the fountain 46 through the rolls 47—48—49 in the usual manner. As the diamond is carried forward upon roll 40, the rotating folding blade 50 will be operated at the proper time to fold the front point upon the line $x\ x$ into the bite of rolls 51—52, the pins 44 being at the same time retracted so as to leave the point free. (See Fig. 4.) The folding blade 50 is made in three sections, as shown in Fig. 8, so as not to interfere with the pasting ridges 45 and not to come into contact with the lines of paste upon the diamond. After being thus folded the blank passes upward between roll 52 and tapes 53 and along guides 54 until it again comes above the roll 40 in passing between the guides and the rolls 55—56. The guides 54 keep the blank from coming into contact with the roll 40 at this point and thus prevent the body of the bag from being smeared with paste from the ridges 45. When the blank has advanced sufficiently the rotating folding blade 57 will be operated to fold the rear point of the diamond and the body of the bag upon the line y, y between the rolls 55—56 thus completing the bag. It will be observed that the roll 56 is placed a sufficient distance from the guides 54 to permit the advance end of the bag bottom to be readily drawn backward when its direction of motion is thus reversed. After passing between the rolls 55—56 the bag will be delivered to mechanism, such for example as that shown in United States Letters Patent No. 231,642, for removing the fold made in its body at the time the rear point of the diamond was fold-

ed, or be carried away from the machine by tapes, as 53—58, and delivered in any suitable manner.

The folding blade 57 is composed of two instead of three sections, the middle portion, which in blade 50 lies between the pasting ridges, being omitted on account of the guides 54 and the cross pasting ridge 59. (See Fig. 2).

The devices for operating the blades 50 and 57 and the pins 44 are those usually employed for the purpose and consequently need no specific description.

Although it is preferable that the pins 44 should be movable, as shown, it is not necessary that they should be so, as fixed pins may be used successfully.

The rolls 2—3 and 40—41 are provided with engaging gears 60—61 and 62—63 and are connected by an intermediate 64 so as to be driven in unison.

What I claim is—

1. The combination with feeding mechanism for advancing a tube, of moistening apparatus for applying moisture to the fold lines of the tube, and a finger laying one ply of the tube back to form the diamond fold, substantially as described.

2. The combination with the rotated frame provided with fingers, as 30—31, of means for opening the end of the tube to permit the entrance of one of the fingers, all substantially as described.

3. The combination with the swinging and rotating frame provided with fingers, as 30—31, of levers, as 32, and means for oscillating the same, all substantially as described.

4. The rotating frame provided with fingers, as 30—31, arranged to enter the end of the tube, substantially as described.

5. The combination with the roll, as 40, provided with two folding blades and pasting ridges, of the two pairs of folding rolls and a paste supplying apparatus, substantially as described.

6. The combination with the roll, as 40, provided with holding pins, pasting devices and two sectional folding blades, of two pairs of co-operating folding rolls, substantially as described.

In testimony whereof I have hereunto set my hand in the presence of two subscribing witnesses.

LUTHER C. CROWELL.

Witnesses:
JAS. A. HOVEY,
ANTHONY N. JESBERA.

(No Model.) 6 Sheets—Sheet 1.

W. A. LORENZ & E. E. CLAUSSEN.

PAPER BAG MACHINE.

No. 534,512. Patented Feb. 19, 1895.

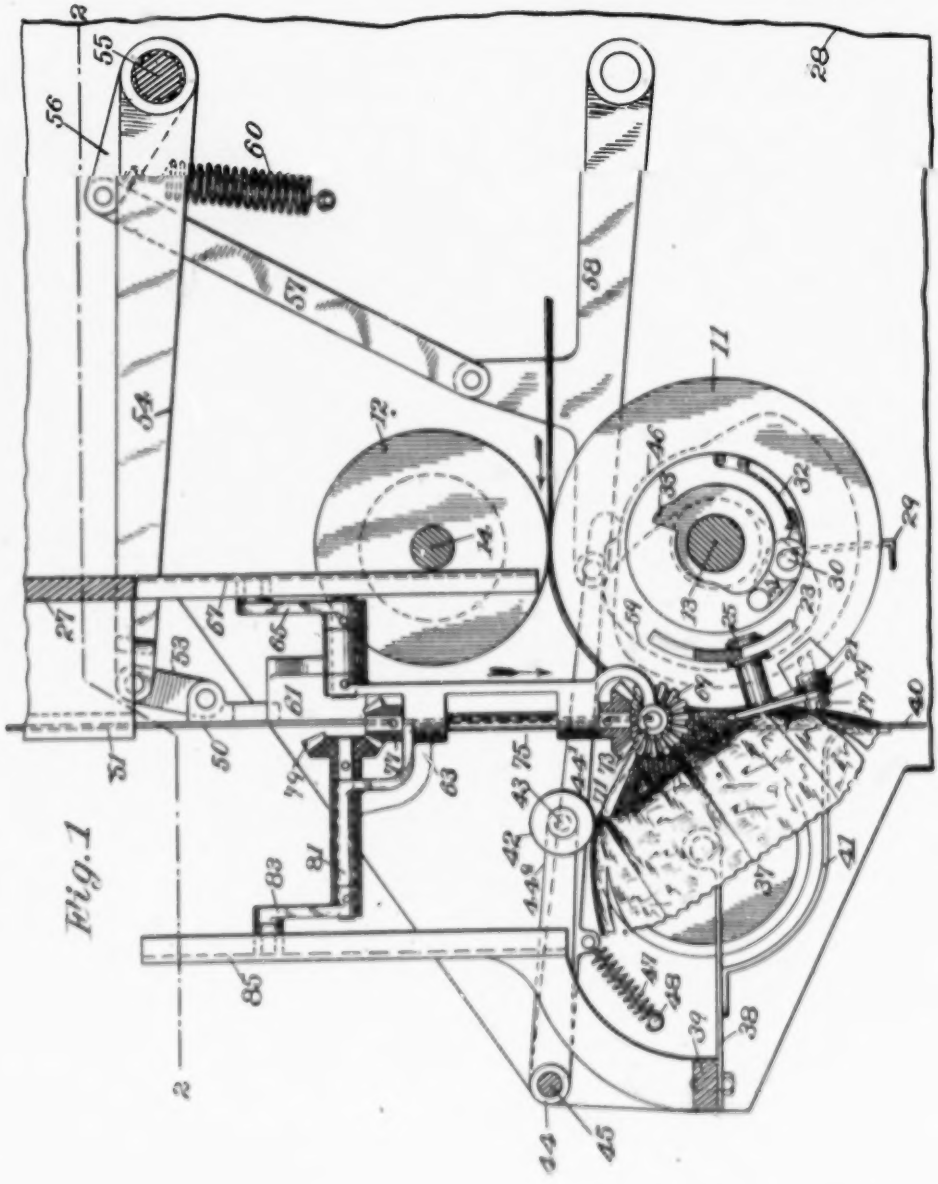

Fig. 1

Witnesses:
W. H. Howes
Elmer M. White

Inventors:
William A. Lorenz
Edward E. Claussen

(No Model.)

6 Sheets—Sheet 2.

W. A. LORENZ & E. E. CLAUSSEN.

PAPER BAG MACHINE.

No. 534,512. Patented Feb. 19, 1895.

Fig. 2

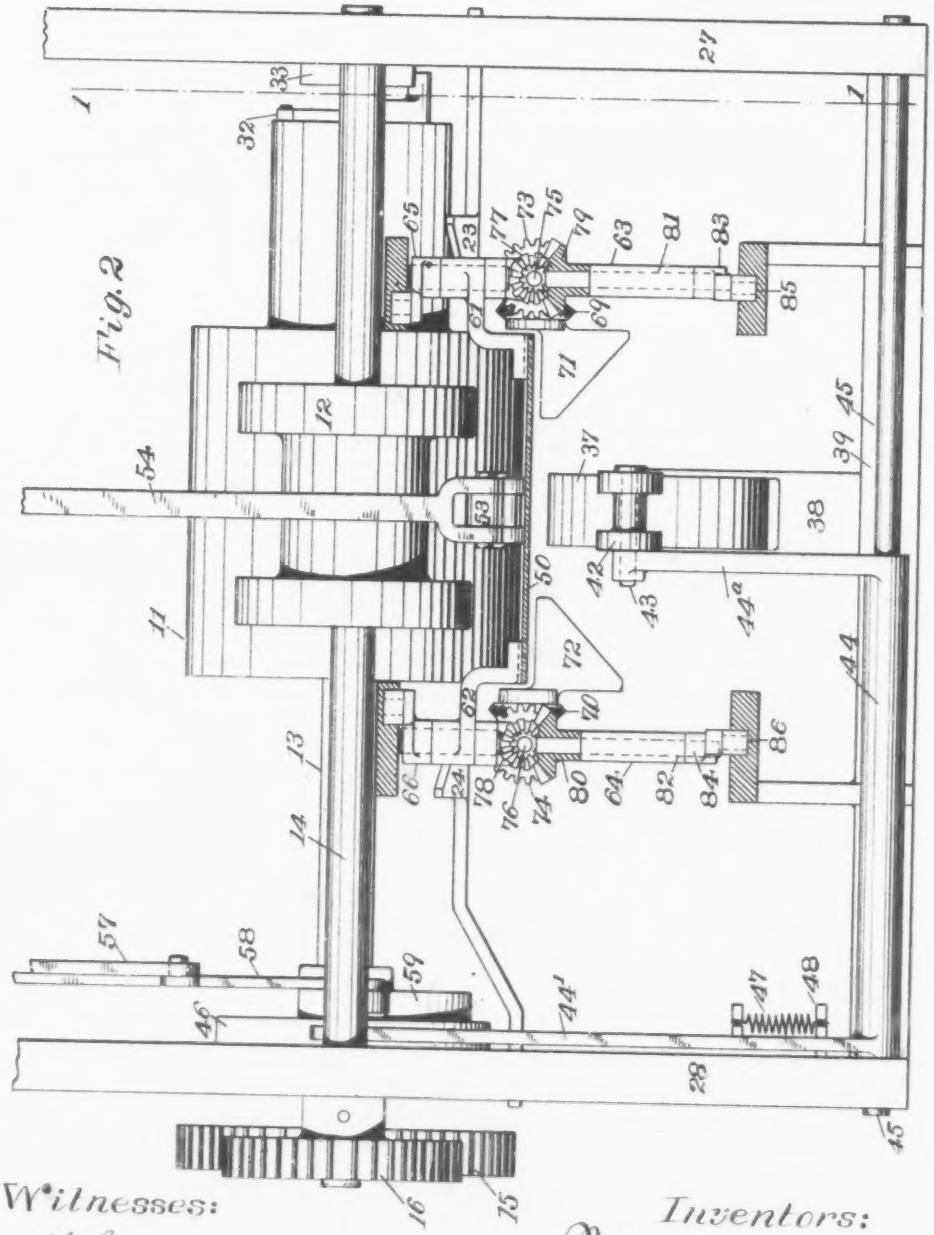

Witnesses:
W. H. Comiss.
Elmer M. White

Inventors:
William A. Lorenz
Edward E. Claussen

(No Model.)

6 Sheets—Sheet 3.

W. A. LORENZ & E. E. CLAUSSEN.

PAPER BAG MACHINE.

No. 534,512.

Patented Feb. 19, 1895.

Fig. 3.

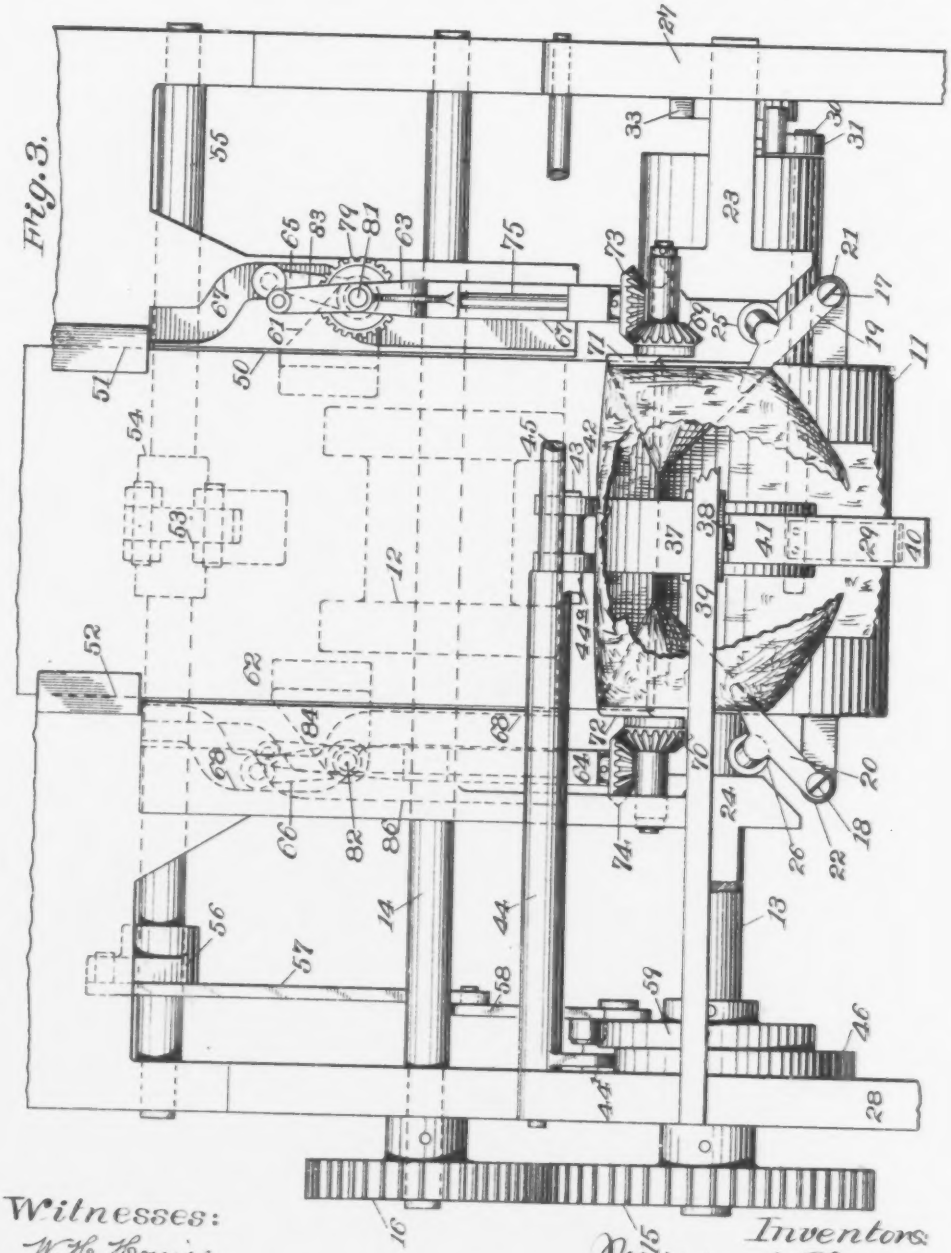

Witnesses:

W. H. Honiss

Elmer M. White

Inventors:

William A. Lorenz

Edward E. Claussen

(No Model.)

6 Sheets—Sheet 4.

W. A. LORENZ & E. E. CLAUSSEN.

PAPER BAG MACHINE.

No. 534,512. Patented Feb. 19, 1895.

Fig. 5

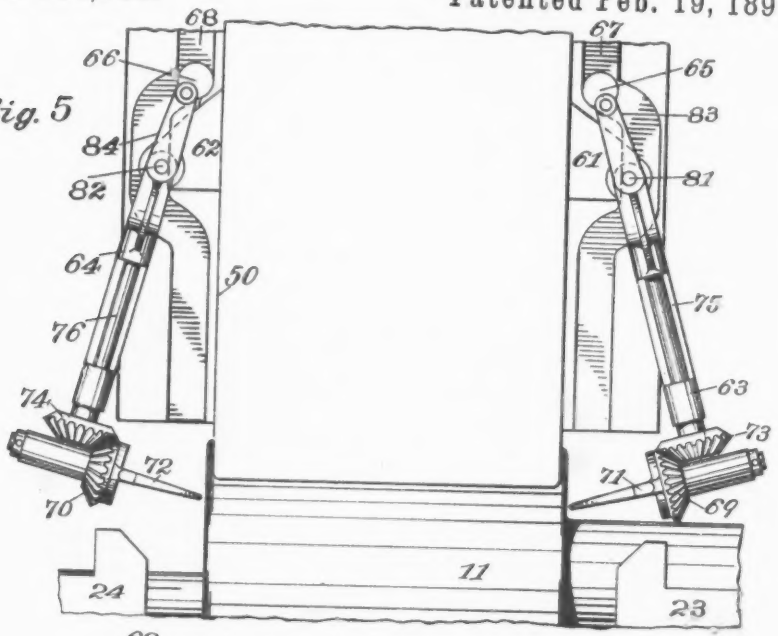

Fig. 4.

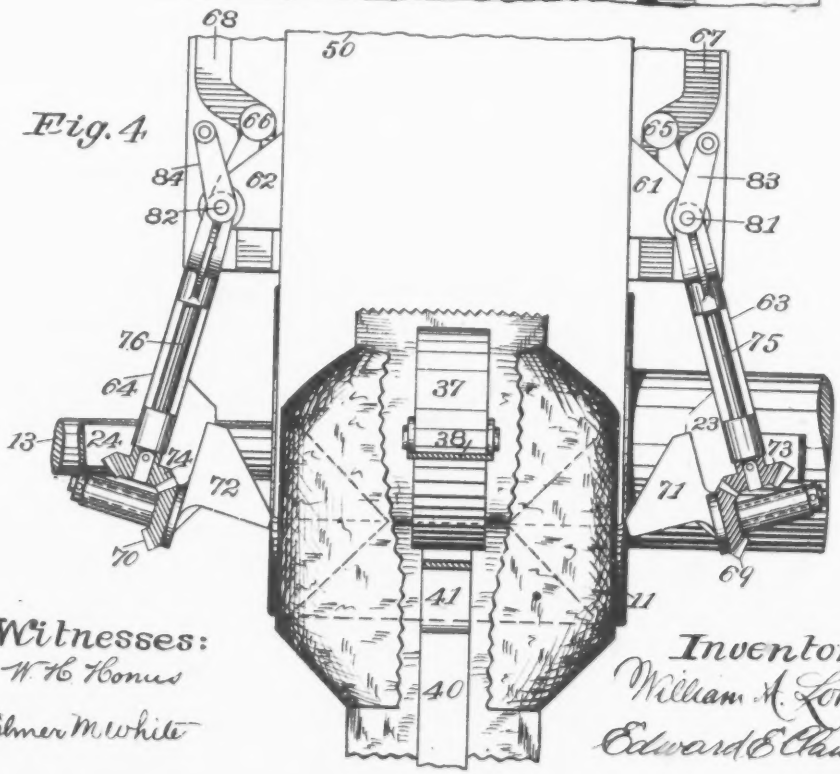

Witnesses:
W. H. Honus
Elmer M. White

Inventors:
William A. Lorenz
Edward E. Claussen

(No Model.)

6 Sheets—Sheet 5.

W. A. LORENZ & E. E. CLAUSSEN.

PAPER BAG MACHINE.

No. 534,512. Patented Feb. 19, 1895.

Fig. 6

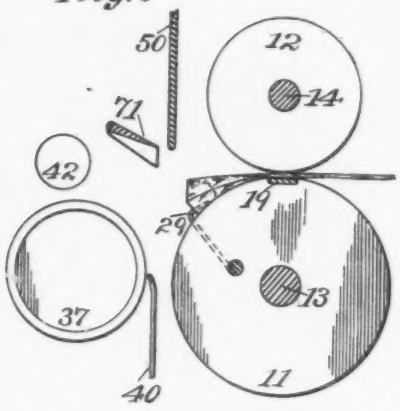

Fig. 7

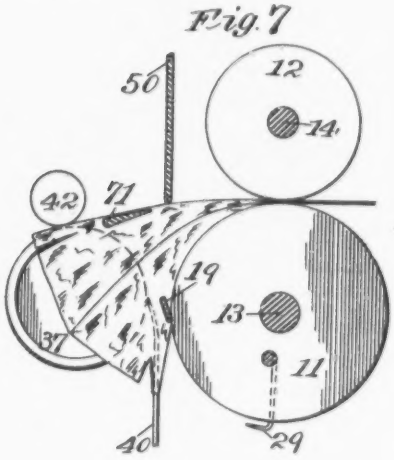

Fig. 8

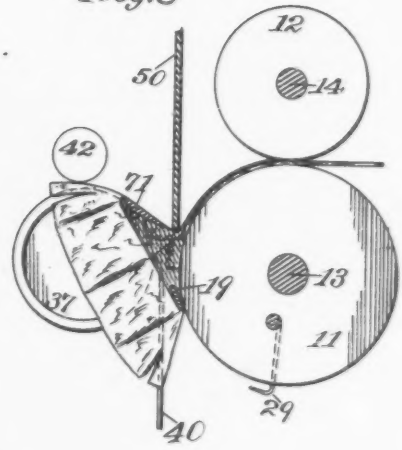

Fig. 9

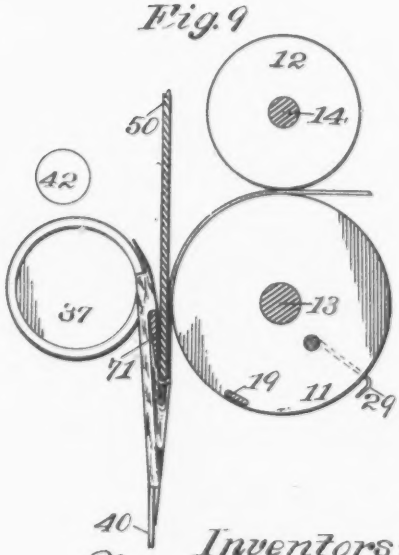

Witnesses:
W. H. Comiss
Elmer M. White

Inventors:
William A. Lorenz
Edward E. Claussen

(No Model.) 6 Sheets—Sheet 6.

W. A. LORENZ & E. E. CLAUSSEN.

PAPER BAG MACHINE.

No. 534,512. Patented Feb. 19, 1895.

Fig. 10

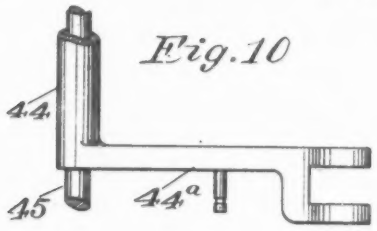

Fig. 11

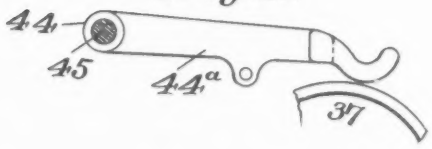

Fig. 13

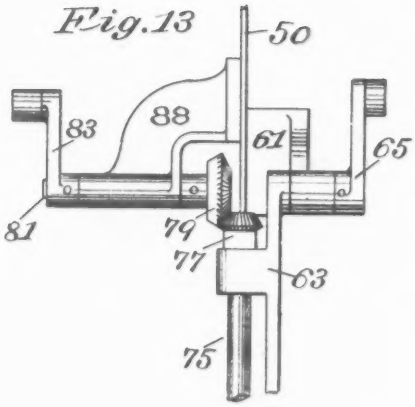

Fig. 12

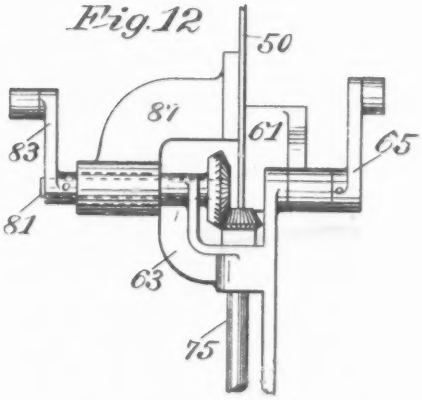

Witnesses:
W. H. Howiso
Elmer M. White

Inventors:
William A. Lorenz
Edward E. Claussen

UNITED STATES PATENT OFFICE.

WILLIAM A. LORENZ AND EDWARD E. CLAUSSEN, OF HARTFORD, CONNECTICUT, ASSIGNORS TO ALBERT H. WALKER, TRUSTEE, OF SAME PLACE.

PAPER-BAG MACHINE.

SPECIFICATION forming part of Letters Patent No. 534,512, dated February 19, 1895.

Application filed April 26, 1893. Serial No. 471,903. (No model.)

To all whom it may concern:

Be it known that we, WILLIAM A. LORENZ and EDWARD E. CLAUSSEN, citizens of the United States, residing at Hartford, in the county of Hartford and State of Connecticut, have invented certain new and useful Improvements in Paper Bag Machines, of which the following is a full, clear, and exact specification.

This invention consists in mechanism for performing one of the most difficult steps in the operation of making a square bottomed bag from bellows sided paper tubing, viz., the opening of one end of the tube into substantially the form shown in Figures 4 and 9, which may by other and well known devices be flattened down into the diamond shape, and be completed by pasting and cross folding the end flaps.

The mechanism herein shown and described represents this invention in its adaptation to that class of machines such as is shown and described in Letters Patent of the United States No. 417,346, of December 17, 1889; wherein the tube is carried by a rotating carriage or cylinder while the diamond folding operations are being performed.

The adaptation of this invention to machines having reciprocating or oscillating folding beds in place of a rotating cylinder, such as those shown and described in Letters Patent No. 331,722, of December 1, 1885, and in No. 361,351, of April 26, 1887, is a matter requiring only the exercise of mechanical skill.

Fig. 1 of the drawings of this specification is a side elevation, partly in section on the line 1—1 of Fig. 2, of our invention adapted to the machine of Patent No. 417,346 above referred to, showing also the blank partially opened. Fig. 2 is a plan view, also partly in section taken on the line 2—2 of Fig. 1, but without the paper blank. Fig. 3 is a left hand elevation of what is shown in Fig. 1. Fig. 4 is a view, looking from the left hand side of Fig. 1, of the blank, and of the devices which carry and operate the triangular folding blades, showing them in the position after withdrawing from the blank. Fig. 5 is a similar view of the blades and their operating devices in a position occupied by them on their way back to engage with the succeeding blank. Figs. 6, 7, 8, and 9 are diagrams, showing the blank, the rolls, and the folding blades in four positions during the operation of folding. Figs. 10 and 11 are a plan and a front view respectively, of a modified form of the arm 44^a. Figs. 12 and 13 represent modified constructions of the supports for the oscillating brackets and their shafts.

No mechanism is herein shown for forming the bellows sided tubing, it being understood that the tubes may be formed and fed to the herein described mechanism by any of the well known methods, such for instance as those described in the patents referred to above.

The cylinder 11 and the roll 12 are fixed upon their respective shafts 13 and 14, which are connected by the gears 15 and 16 respectively, and are driven at suitable speeds from any convenient part of the machine. The side grippers 19 and 20 are mounted upon the pivots 17 and 18 on the cylinder, and are provided with springs 21 and 22 which hold the grippers in their outward position except when they are carried inwardly by the cams 23 and 24 acting against the rollers 25 and 26 respectively, causing the grippers to hold the paper upon the cylinder, and to release it again at suitable times. The cams 23 and 24 are attached to the frames 27 and 28 respectively. The front gripper 29 is attached to one end of the shaft 30, which is journaled in the cylinder and has fixed upon its opposite end the arm 31, by means of which the gripper is opened and closed. The spring 32 acting upon the arm 31 operates to keep the gripper closed upon the cylinder, excepting when it is opened by the action of the cam 33, which is fixed to the frame 27, as may be best seen in Figs. 1 and 3. The roll 37 turns freely on a pin held by the bracket 38 attached to the cross brace 39 between the frames. The bracket 38 also supports the extension 41 for the guide plate 40. The presser 42 is mounted on a pin 43 which is fixed in one arm 44^a of the frame 44, and that frame is free to oscillate upon the shaft 45, the amount of oscillation being governed by the cam 46 fixed upon the shaft 13, the arm 44′ being held in engagement with that cam by its weight and by the action of the spring

47 attached between the arm 44' and one of the pins 48.

The folder plate 50 is fitted to slide vertically in the grooves 51, 52 in the frames 27 and 28, and is connected by the link 53 to the arm 54, which is fixed on the shaft 55. That shaft is journaled in the frames 27 and 28, and has also fixed upon it the arm 56, which is connected by the link 57 to the cam arm 58, the end of which is held in contact with the cam 59 by the action of the spring 60 attached to the arm 56. The cam 59 is fixed upon the shaft 13 and operates through the connecting links and arms to elevate the folder plate 50, and to allow it to drop at a suitable time and speed as it is pressed down by the action of the spring.

Upon the side extensions 61 and 62 of the folder plate are journaled the oscillating brackets 63 and 64, with their axes of oscillation parallel, so as to allow the brackets to oscillate toward and from each other, and they are rigidly connected with their respective cam arms 65 and 66. The ends of these arms are adapted to engage in the cam grooves 67 and 68 made in extensions of the frames 27 and 28; these grooves being so formed as to cause the brackets to oscillate at the required times. At the lower ends of the brackets 63 and 64 are journaled the bearings of the bevel gears 69 and 70 respectively, so arranged that when the brackets are in their inward or operative position as seen in Figs. 1 and 3, the axes of the gears are substantially in line with each other and with the lower front edge of the folder plate 50. Attached to the inner ends of the bevel gears 69 and 70 are the folder blades 71 and 72 respectively; the function of these blades being to enter the side tucks of the blank and to fold back the upper plies thereof over the edge of the folder plate 50. A suitable oscillatory motion is communicated to the bevel gears 69 and 70 by the bevel gears 73, 74, fixed on the shafts 75 and 76 respectively. These shafts are journaled in the brackets 63 and 64, and have fixed upon their upper ends the bevel gears 77 and 78 respectively, which engage with the bevel gears 79 and 80, fixed on the shafts 81 and 82 respectively. The shafts 81 and 82 are also journaled in the brackets 63 and 64 with their axes substantially in line with the axes of the bearings on which these brackets oscillate, and have fixed on their outer ends the arms 83 and 84, the ends of which are adapted to engage in the cam grooves 85 and 86 respectively, made in extensions of the cross brace 30 between the frames 27 and 28. These grooves are so formed as to cause the blades 71 and 72 to oscillate as required. These portions of the brackets 63, 64, which form the bearings for the shafts 81 and 82, may be journaled in brackets attached directly to the folder plate 50, as shown by the bracket 87 in Fig. 12, or these shafts may be journaled in independent bearings similar to the bracket 88 of Fig. 13.

The operation of the machine is as follows: A suitable length of tucked tubing is fed between the cylinder 11 and the roll 12, and as the leading end passes the line of contact of the cylinder and roll, the front gripper 29 closes upon the center of the lower ply, and as the tube advances separates it from the upper ply, which passes forward over the roll 37 and under the presser 42, which is slightly elevated for that purpose as shown in Fig. 6. The side grippers 17 and 18 are then turned inward, so as to grip to the cylinder the edges of the lower plies at the points where the corresponding corners of the bottom of the bag are subsequently to be. As the tube advances the folder plate 50 moves downward, bringing its lower edge in contact with the blank substantially at the line on which the primary transverse fold is to be made. At the same time the brackets 63 and 64 oscillate toward each other, bringing the blades 71 and 72 into the tucks, at which time the various parts are in the position shown in the diagram Fig. 7, the front gripper 29 having released its hold after bringing the front lower ply of the tube under the guide 40. The presser 42 is now allowed to drop upon the lower ply to keep the pasted longitudinal seam from spreading or opening during the operation of folding. Passing to the position shown in Figs. 1 and 8, the blades 71 and 72 are caused to oscillate on their bearings to the extent therein shown, which operates to stretch out the side tucks of the tube between those four points upon the edges of the tube which are engaged by the edges of the side grippers and the blades, and which are to form the bottom corners of the resulting bag. The angular edges of the blades serve also to define the corresponding edges of the well known inward triangular folds peculiar to this form of bag. Continuing the operation from the position shown in Figs. 1 and 8, to that shown in Fig. 9 the folder plate moves down with the tube, and the blades continue to turn, which action in conjunction with that of the roll 37 flattens the blank into substantially the form shown in Figs. 4 and 9. At a point intermediate the positions of Figs. 8 and 9 the side grippers 19 and 20 are withdrawn. At the position shown in the latter figure the blades 71 and 72 are withdrawn, as also shown in Fig. 4, and the diamond folded blank, flattened and guided by the roller 37 and the guide plate 40 is delivered to any suitable mechanism for pasting and completing the bag. The folder plate and its appurtenances are then elevated, and the blades are turned back to a position suitable for engaging the succeeding blank.

The presser 42 operates to hold back the upper ply and to bend it more sharply and evenly against the edge of the folder plate,

and also operates to hold together the longitudinal pasted seam of the tube, when that seam is made in the upper ply; all of which is highly desirable especially when folding heavy paper.

The amount of tension imparted to the upper ply may be altered by varying the tension of the spring 47. The presser 42 may be fixed on the arm 44^a, or the end of that arm may be adapted to perform the function of that presser as shown in Figs. 10 and 11.

We claim as our invention—

1. A folding bed, provided with grippers which engage one ply of the blank substantially at the points which are to be the bottom corners of that side of the bag, a folder plate having an edge adapted to define the line of the primary transverse fold in the other side of the blank, and a pair of oscillating blades connected with the folder plate and arranged to oscillate upon axes substantially in line with the folding edge of the plate; all substantially as described.

2. A folding bed, provided with grippers which engage one ply of the blank substantially at the two points which are to be the bottom corners of that side of the bag, a pair of angular folding blades which engage the corresponding corners of the other ply, a folder plate for defining the primary cross fold line, and a pair of arms pivoted on that plate and operating to carry those blades into and out of the side tucks of the blank; substantially as described.

3. A folding bed provided with a gripper for opening the mouth of the blank, a roller 37 for entering and distending that mouth, a folder plate adapted to define the primary transverse crease in the blank, and a presser with its cam, all arranged and operating to open the mouth of the blank and to fold the upper ply thereof sharply against the edge of the folder plate; substantially as described.

4. A cylinder 11 and the roll 12 for bringing the blank into the machine, a folder plate adapted to define and travel with the primary transverse crease in the upper ply of the blank, the roll 37, the presser 42 and its cam 46, all arranged and operating to fold the upper ply sharply against the edge of the folder plate; substantially as described.

5. A folder plate having one edge adapted to define the primary transverse crease in a bag blank, a pair of arms pivoted thereon, a pair of oscillating folding blades pivoted upon these arms with their axes of oscillation substantially in line with each other and with the folding edge of the plate when in their operative position, with cams and connecting mechanism for causing these arms to oscillate at the desired times and to the required extent; substantially as described.

6. The combination of the folder plate 50, the blade carrying arms 63, 64, journaled thereon, the cam arms 65, 66, and the cams 67, 68, arranged and operating to carry the blades into and out of the tucks at suitable times; substantially as described.

7. The combination of the blade 50 and the arms 63, 64, adapted to reciprocate in a constant plane, the blades 71, 72 respectively journaled thereon, the cam arms 65, 66, 83, 84, and the cam grooves 67, 68, 85, 86, located in planes parallel with the plane of reciprocation of the blade, substantially as described.

8. The combination of the folder plate 50, the arms 63, 64, journaled thereon, the cams 85, 86, the cam arms 83, 84, journaled substantially in line with the journals of the arms 63, 64, respectively, the blades 71, 72, journaled on these arms, and connecting mechanism between these blades and their respective arms, all arranged and operating to communicate the desired oscillatory motion to the blades; substantially as described.

WILLIAM A. LORENZ.
EDWARD E. CLAUSSEN.

Witnesses:
W. H. HONISS,
D. W. DODSON.

(No Model.)

7 Sheets—Sheet 1.

S. T. MURCHIE.

PAPER BAG MACHINE.

No. 540,556. Patented June 4. 1895.

Fig. 1.

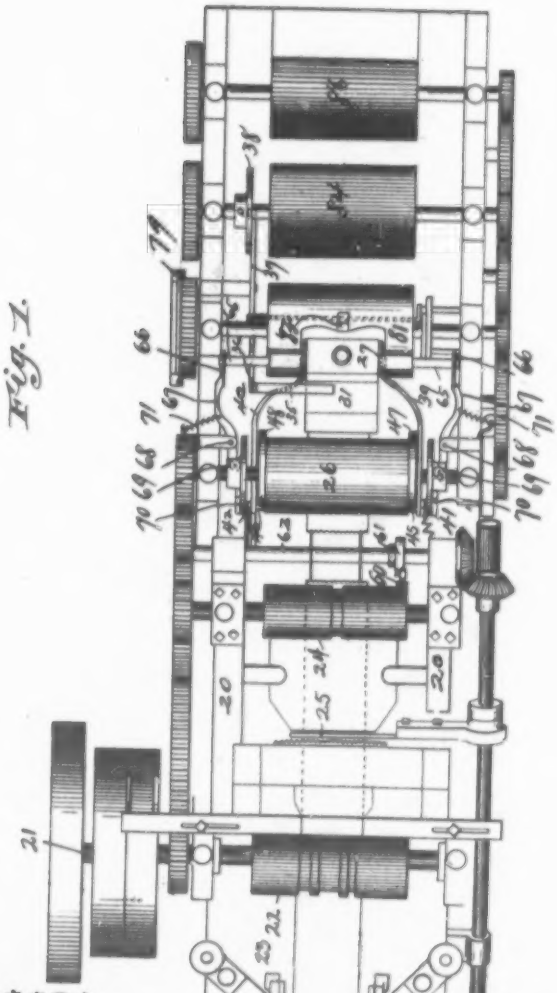

Witnesses,
Frederick F. Goodwin

Inventor,
Sylvanus T. Murchie
by Offield Towle & Graves
Att'ys.

(No Model.) 7 Sheets—Sheet 2.

S. T. MURCHIE.

PAPER BAG MACHINE.

No. 540,556. Patented June 4, 1895.

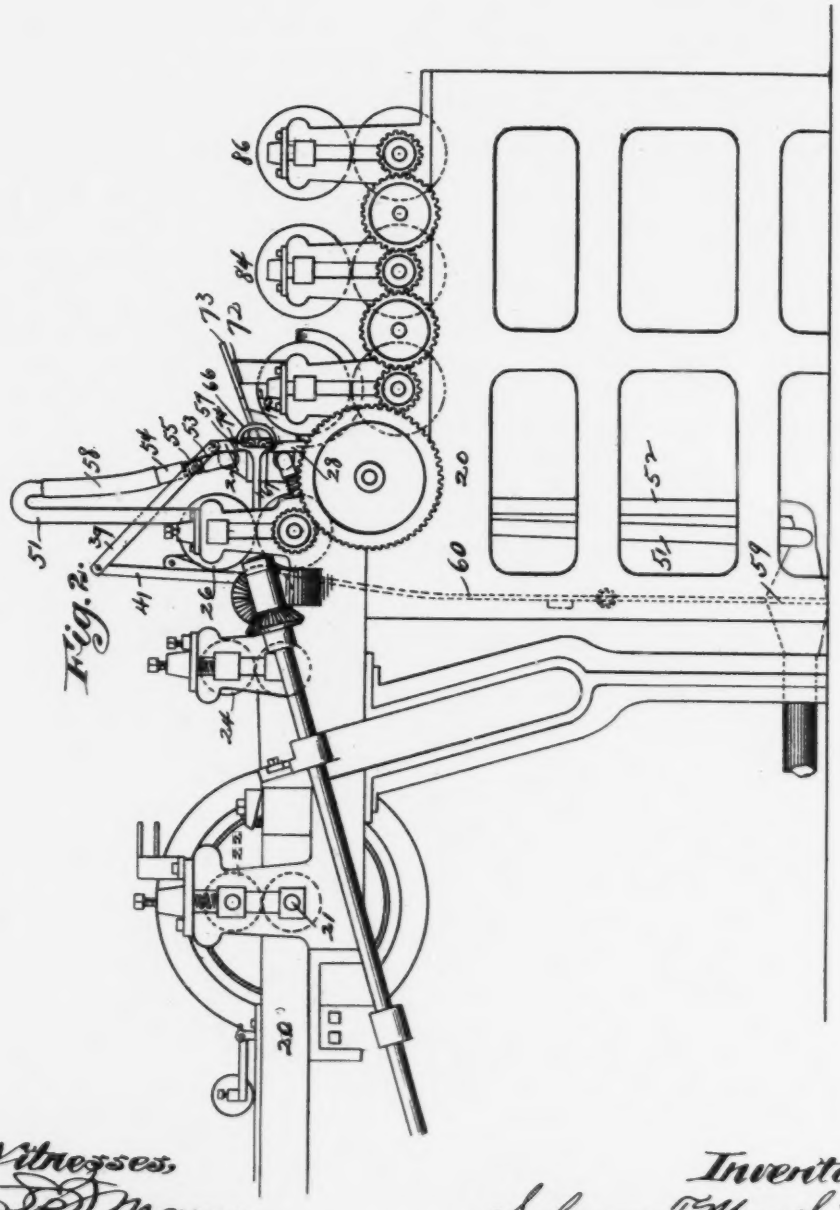

Witnesses,
J. S. Mann
Frederick C. Goodwin

Inventor,
Sylvanus T. Murchie
By Offield, Towle & Linthicum
Attys.

(No Model.) 7 Sheets—Sheet 3.

S. T. MURCHIE.

PAPER BAG MACHINE.

No. 540,556. Patented June 4, 1895.

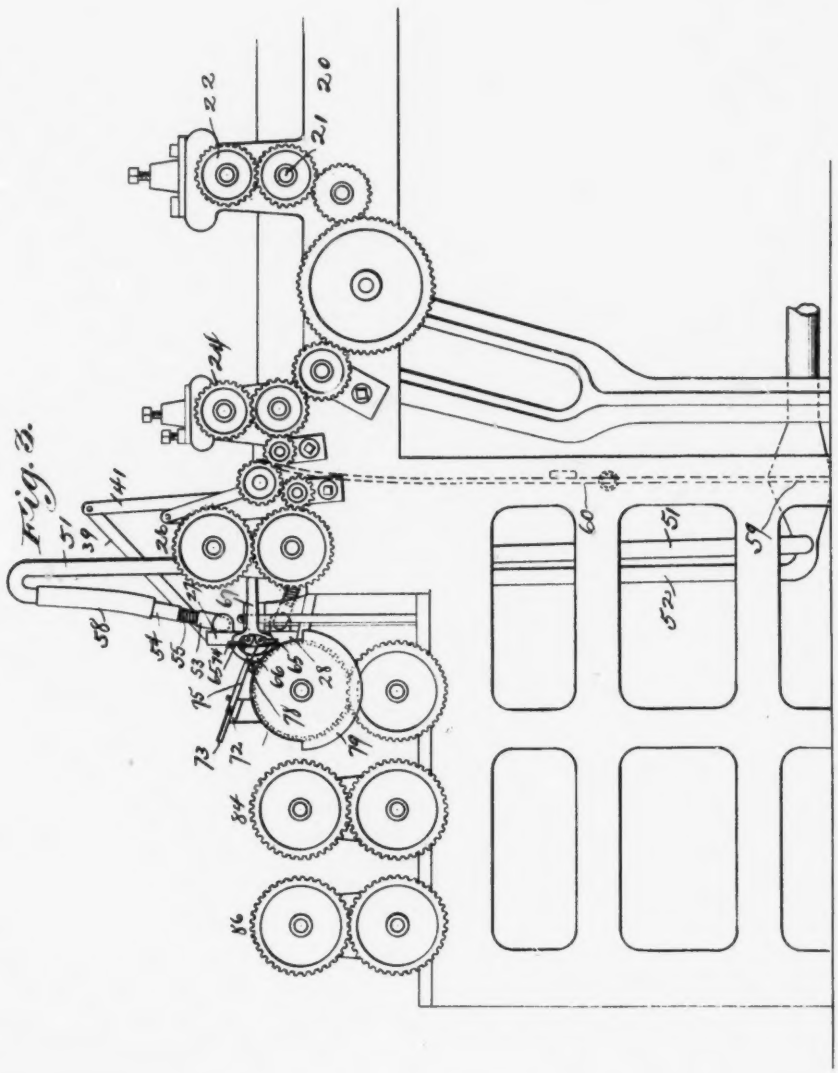

Fig. 3.

Witnesses,
Frederick P. Goodwin

Inventor:
Sylvanus T. Murchie
by Offield, Towle & Linthicum
Attys.

(No Model.) 7 Sheets—Sheet 4.

S. T. MURCHIE.

PAPER BAG MACHINE.

No. 540,556. Patented June 4, 1895.

Fig 4.

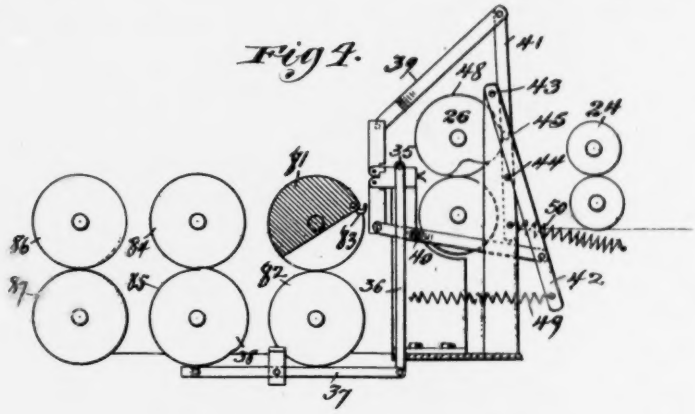

Fig 5.

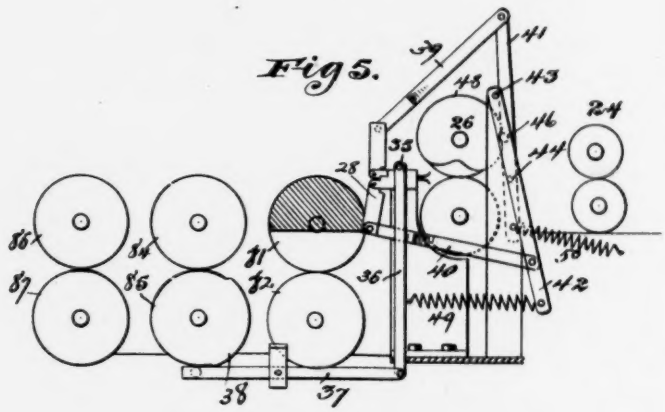

Fig. 6.

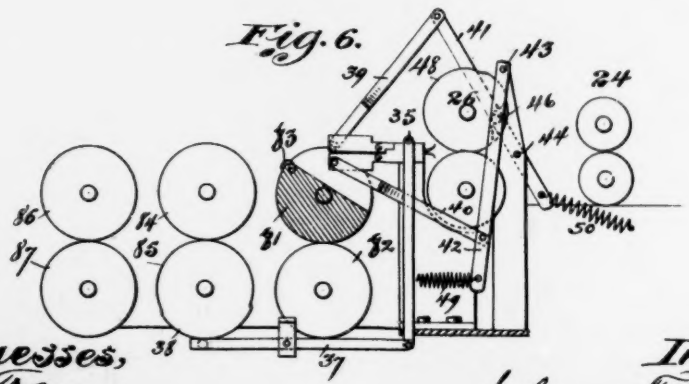

Witnesses,
S. D. Mann
Frederick F. Goodwin

Inventor.
Sylvanus T. Murchie
By Offield, Towle & Linthicum
Attys.

(No Model.) 7 Sheets—Sheet 5.

S. T. MURCHIE.

PAPER BAG MACHINE.

No. 540,556. Patented June 4, 1895.

Fig. 7.

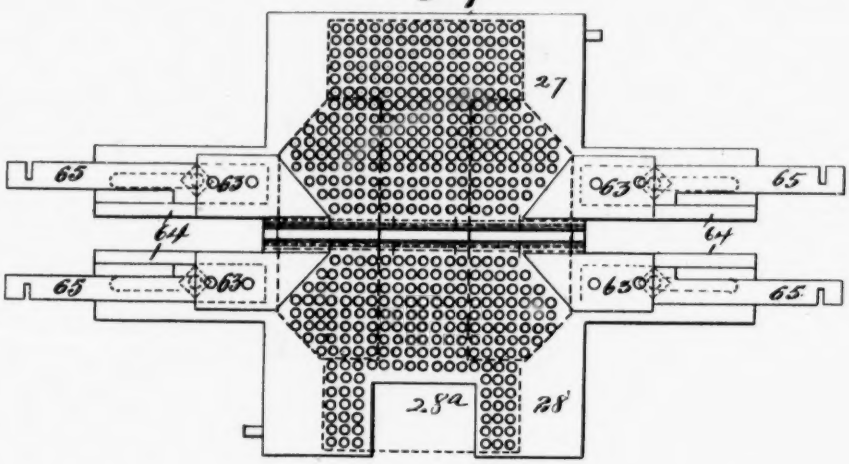

Fig. 8.

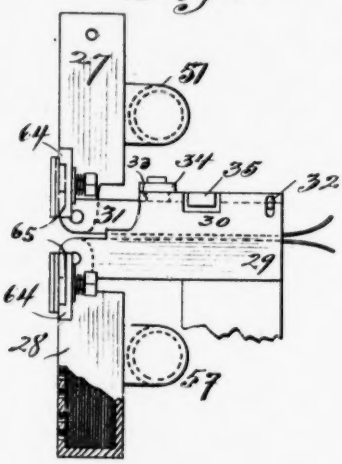

Fig. 9.

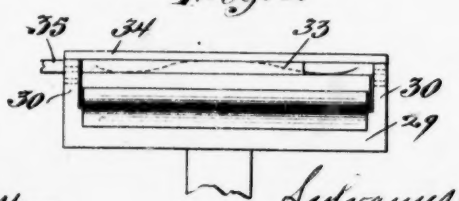

Witnesses,
F. S. Mann
Frederick F. Goodwin

Inventor,
Sylvanus T. Murchie
by Offield, Towle & Linthicum
Att'ys.

400

(No Model.) 7 Sheets—Sheet 6.

S. T. MURCHIE.

PAPER BAG MACHINE.

No. 540,556. Patented June 4, 1895.

Fig. 10.

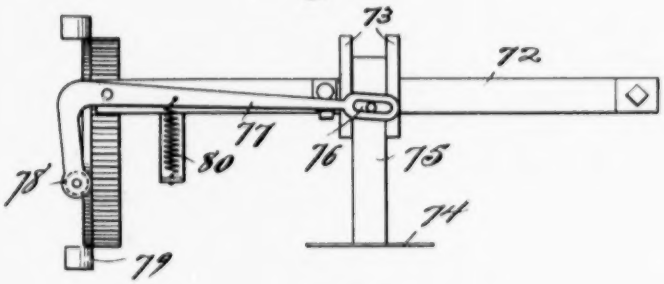

Fig. 11.

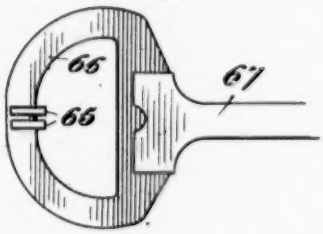

Fig. 12.

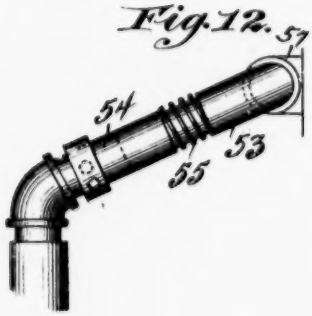

Witnesses,
F. E. Mann
Frederick F. Goodwin

Inventor:
Sylvanus T. Murchie
By Offield Towle & Linthicum,
Att'ys.

(No Model.) 7 Sheets—Sheet 7.

S. T. MURCHIE.

PAPER BAG MACHINE.

No. 540,556. Patented June 4, 1895.

Fig. 15.

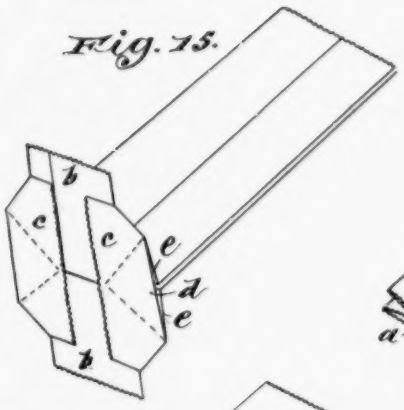

Fig. 13.

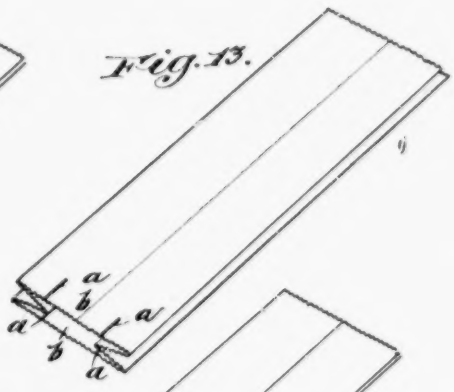

Fig. 17.

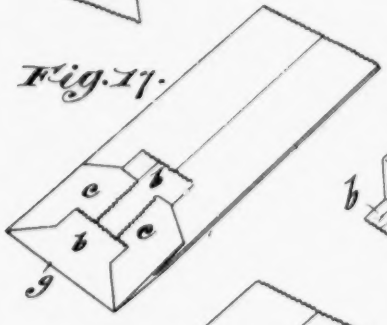

Fig. 16.

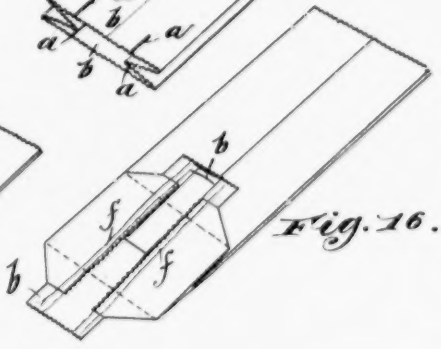

Fig. 19.

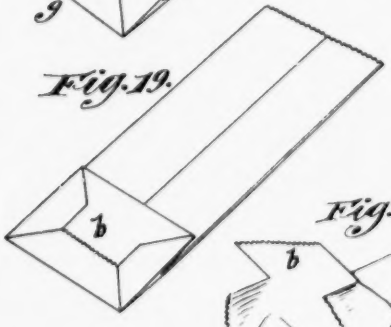

Fig. 18.

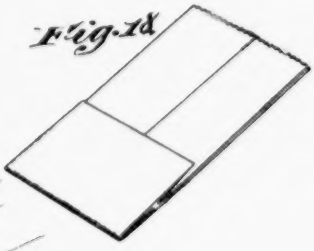

Fig. 14.

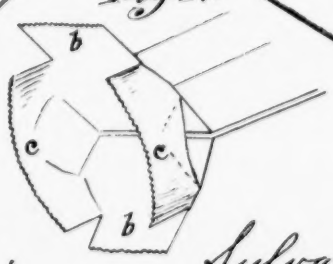

Witnesses,
S. A. Mann.
Frederick F. Goodwin

Inventor:
Sylvanus T. Murchie
by Offield, Towle & Linthicum.
Atty's.

UNITED STATES PATENT OFFICE.

SYLVANUS T. MURCHIE, OF BATAVIA, ILLINOIS, ASSIGNOR TO THE WESTERN PAPER BAG COMPANY, OF SAME PLACE.

PAPER-BAG MACHINE.

SPECIFICATION forming part of Letters Patent No. 540,556, dated June 4, 1895.

Application filed February 5, 1895. Serial No. 537,329. (No model.)

To all whom it may concern:

Be it known that I, SYLVANUS T. MURCHIE, of Batavia, in the county of Kane and State of Illinois, have invented certain new and useful Improvements in Paper-Bag Machines, of which the following is a specification.

This invention relates to paper bag machines and more particularly to a machine for making what are designated as self-opening satchel bottom square bags from flat tubes having bellows side folds.

My invention relates more particularly to a paper bag machine in which are employed suction formers for opening the leading end of the tube by a single movement, whereby the side folds of the satchel bottom are produced, in combination with means for firmly clamping the body of the blank while the end is being thus opened and the side folds made, and in the employment of means whereby the end of the bag blank is firmly held until it is caught by the nipper roll or other mechanism for carrying the bags away. Thus, in producing bags upon my improved machine the air is exhausted from the suction boxes and the latter in opening separate the sides of the blank by a very rapid movement which causes the sides of the blank to be folded over, and during this opening movement transversely moving blades having pointed ends are thrust into the bellows fold over one ply of the blank, and as the formers approach the limit of their opening movement the side folds are completed, the line of fold being defined or made straight by drawing the sides tightly over the pointed ends of these blades. These transversely moving blades do not tuck in the sides of the blank at all, but when thrust in to their full extent serve as formers over which the paper is drawn in making the side folds, thus making a sharp, clearly defined fold; and when the air is cut off these blades hold the end of the bag firmly against the former until by a slight forward movement of the lower former the blank is delivered into the grasp of the nipper roll by which it is carried away.

The suction boxes are hinged in planes, respectively, above and below and parallel to the path of the moving blank. Each box is constructed integrally—that is, having no hinged sections and having no movement except a rocking or hinged movement upon a fixed axis. The devices which take away the bag consist of a pair of rolls, one of which is a nipper roll and has a portion of its body cut away so as to permit the suction formers to rock upon their axes, the parts being so timed that during the movement of the suction boxes the mutilated side of the roll is presented toward them. I have also devised a movable platen for flattening the end folds against the formers. I have also provided means whereby the blanks travel at a greater rate of speed during a part of their movement, thereby permitting the web of paper to move continuously while the severed blank by its accelerated movement gains sufficient time to compensate for the time lost in the operations upon the blank.

In the accompanying drawings, Figure 1 is a plan view (parts omitted) of that end of the machine on which the suction-formers and pasting devices are mounted. Figs. 2 and 3 are side elevations of the same parts, but taken from opposite sides. Figs. 4, 5, and 6 are elevations, partly in section, showing three positions of the formers, with a corresponding position of the mutilated roll in relation thereto. Figs. 7, 8, and 9 are detail views of the suction-former, Fig. 7 being a front elevation showing the formers open, with the folding blades moved in over the face of the formers; Fig. 8, a side elevation with parts broken away, and Fig. 9 a rear elevation with the suction-formers closed. Fig. 10 is a plan view showing the movable platen and the means for supporting and moving the same. Fig. 11 is a detail view showing the means for connecting the transversely-moving blades or formers on one side of the machine. Fig. 12 is a detail view of a section of one of the exhaust-pipes. Figs. 13 to 19, inclusive, show various stages in the formation of the bag.

I have not shown the means for forming the tube and producing the bellows folds in the sides thereof, as these means are well known and many of the parts which I have shown are of ordinary construction and will need no particular or specific description.

The frame work of these paper bag machines is usually divided transversely, and I have shown that portion or member of the

frame work which supports the feed rolls and the pasting and folding devices which operate upon the bag blanks, together with one pair of feed rolls for the tube and the striker arm by which the tube is severed into bag lengths.

In the drawings, 20 represents a supporting frame work whereon is journaled the main driving shaft 21, carrying one of a pair of feed rolls 22 which receive the tube 23 from the bellows fold former.

24 represents a pair of feed rolls and between said rolls and the feed rolls 22 the tube is severed into bag lengths by the revolving striker arm 25. The feed rolls 24 deliver the blanks to a second pair of feed rolls 26.

The pair of feed rolls 26, it will be observed, are much larger in diameter than the rolls 24, and in consequence the bag blanks when engaged by the rolls 26 are fed forward at much greater speed, being separated from each other as clearly seen in Fig. 1. The feed rolls 26 deliver the bag blanks to the suction formers or suction boxes, which are most clearly shown in Figs. 7 and 8.

The suction formers are marked, respectively, 27 and 28. They are hollow rectangular box-like structures having their faces perforated in defined lines approximating closely to the form of the end of the bag blank during one stage of the operation. These suction boxes are hinged upon horizontal axes parallel to and above and below respectively the path of the bag blanks. The former 28 is hinged to a stationary block 29 having raised sides 30. The former 27 is hinged to a vertically reciprocating block 31 fitted to move vertically between the raised sides 30 of the block 29 and having a slot and pin connection therewith, as shown at 32.

The block 31 is normally held down upon the block 29 by means of the spring 33, having its bearing on the cross bar 34. An arm 35 is secured with the block 31 and projects outwardly being connected by link 36 with a pivoted lever 37, the latter being adapted to be intermittently vibrated or rocked upon its pivot by means of a cam disk 38, mounted on one of the revolving shafts, presently to be described.

By the means above described the blocks 29 and 31 are adapted to constitute a clamping device whereby one end of the bag blank may be clamped and held while its opposite end is being opened by the suction formers and otherwise operated upon. Means are provided for moving said suction formers on their hinges so as to open the bag blank, said means comprising links 39, 40, connected to the pivoted levers 41, 42, respectively, the pivots of said levers being marked 43, 44, respectively, and said levers carrying anti-friction rollers or other suitable bearings 45, 46, adapted to travel upon cams 47, 48, said cams being in the form of disks secured upon the shaft carrying the upper roller of the pair 26. Springs 49, 50 normally tend to cause the rollers carried by the pivoted levers to contact with the cams and the cam 38 is so timed that as the bag blank is fed forward by the rollers 26, the block 31 is raised thus bodily lifting the upper former 27 and permitting the bag blank to enter between the formers while they stand in the position shown in Fig. 6. As soon as the bag blank has entered between the suction formers it is clamped by the downward movement of the block 31 and thereupon the cams 47, 48, rock the levers 41, 42, and through the links 39, 40, cause the suction formers 27, 28 to separate. The interiors of said suction formers or suction boxes are exhausted of contained air through the pipes 51, 52, said suction pipes communicating with some suitable air exhausting apparatus as shown at the bottom of Fig. 2. In order to permit said pipes to flex and follow the movements of the formers, I have provided them with telescoping sections 53, 54, having interposed between them the coiled spring 55. The section 53 has a swiveling connection with a hollow stud 57 on the suction box. Of course a rubber hose or other tube flexible throughout might be employed, but I have found that owing to the continuous flexing of the rubber it soon becomes broken. I therefore employ metallic pipes for the main portions, using only a flexible section as seen at 58, Fig. 2, and then by means of these telescoping sections and the spring the movement of the former is provided for, the section 53 having a sliding movement to compensate for the circular movement of the former during operation. A cut-off must be provided in said exhaust pipes or at some other suitable point in the air exhausting apparatus. In the drawings I have shown a straight slide valve or cut-off plate 59 carried by a pivoted lever 60 operated by a cam 61 on an intermediate shaft 62. The movement of this valve is so timed with reference to the movements of the former that the exhaust will be cut-off after the completion of the opening movement of the formers.

The blank as it is fed into the former is shown in Fig. 10, and at the completion of the opening movement of the formers said blank must be reduced to the condition shown in Fig. 11—that is to say, the leading end of the bag must be opened by the separation of its top and bottom plies, and the bellows sides of the bag must be broken down and folded in over said plies, their edges being parallel and slightly separated and adapted to be secured together by the folding of the flaps of the top and bottom plies over said side folds.

The chief difficulty heretofore encountered in the manufacture of these self-opening satchel bottom square bags by the aid of suction formers has been to successfully fold in the side flaps, and so far as I am aware no practical, successful machine has been made prior to my invention for doing this work. It is one of the features of my invention and of my machine to provide for producing these side folds simultaneous with the opening of

the leading end of the bag blanks by the movement of the formers and holding such side folds securely against the formers until the partially completed bag can be seized by the off bearing rolls. To accomplish this I hinge the suction boxes respectively above and below the line of travel of the bag, and open them quickly by a single continuous, positive movement. By this means the side folds are produced without mechanically breaking down the paper or forcing any mechanical devices against the paper to define the folds. It is necessary however to clamp the end of the bag blank securely against the face of the former so as to hold it in position after the action of the exhaust has ceased and before it is seized by the nipper roll. It is also desirable to provide a former over which the paper may be folded, and which will accentuate or define the line of fold. The mechanism which I have provided to this end comprises transversely moving blades or formers, preferably constructed in the form of flat plates arranged in pairs and parallel to the axis of the suction boxes, and having their forward ends pointed to adapt them to enter the bellows fold of the blank simultaneous with the opening movement of the boxes and to advance as the boxes separate but without actual contact with the paper. These blades hold the ends of the blank against the suction boxes while the side flaps are drawn over the entering points of the blades by the adhesion of the flaps of the upper and lower plies of the bag blank to the suction formers during their separation. These formers are best shown in Figs. 7 and 8, and consist of the flat blades 63 which are adapted to slide in suitable ways formed in the extensions 64 of the boxes 27, 28, respectively. These blades, as shown have a slot and pin connection with the formers, but this may be varied as desired. The forward ends of the blades are pointed, the points being arranged adjacent and parallel to the axis of the suction boxes. They have stems 65, the stems being connected in pairs by the curved plate 66 (Fig. 12), carried by the levers 67 pivoted on the brackets 68 and provided with rollers 69 which carry cams 70 mounted on the shaft of the upper roller of the pair 26. The cams which operate the blades and the boxes being on the same shaft their simultaneous movement is insured. A spring 71 normally tends to hold said blades back or at the outer limit of their movement, while the cam imparts a vibrating movement to the lever, thus thrusting the blades inwardly, the inception of their inward movement being contemporaneous with the opening movement of the formers. The cam may be constructed so as to move the blades in both directions and the spring 71 omitted.

In order to press the folds of the side flaps after they have been formed by the opening of the suction boxes, I employ a movable platen having a reciprocation to and from the faces of the boxes when separated. The relative position of this movable platen with reference to the other parts of the machine is shown in Fig. 2, and a detail plan view of the platen and its operating mechanism is given in Fig. 10. Referring to the latter figure 72 represents a metal bar having slide ways 73 thereon. 74 represents the platen which is in the form of a flat plate carried upon the end of a stem 75, sliding in ways 73. The stem has a pin 76 which enters a slot in a pivoted lever 77, the latter being provided with a roller 78 which is engaged by a revolving cam 79 mounted, in the present instance, upon the gear wheel on the shaft of the mutilated roll. A spring 80 normally tends to thrust the platen toward the suction boxes and a segmental cam rocks the lever on its pivot thus retracting the platen.

In order to remove the blank from the formers, I employ a pair of rolls, the members whereof are marked 81, 82. The roller 81 is a nipper roll while the roller 82 forms the bed roll of the pair. The nipper roll is mutilated, a greater portion of its body being removed as clearly shown in Figs. 4, 5, and 6. The purpose of this mutilation or cutting away of the roll is to enable the suction formers to move in the arc of a circle which intersects the circular path of said roll. If the roll 81 were placed beyond the path of the formers during their opening and closing movements, it would be beyond the position where the nipper carried thereby could grasp the end of the completed bag and hence a reciprocating movement of the suction formers would be necessary after the completion of their forming action. As this reciprocation of the formers entails a loss of time, I have avoided it, making the formers non-movable or stationary with reference to the path of the blank and give them a slight vertical movement upon their hinges during the formation of the bag. The nipper is indicated at 83 and is of usual construction, but located in this instance along the edge or margin of the mutilated roll. The movement of these rolls is so timed that during the folding and unfolding movements of the formers the mutilated or cut away portion of the roll is presented next to said formers and the nipper is presented opposite the recess 28^a in the lower margin of the former 28. In order to present the lower flap of the bag blank to the grasp of the nipper the cam 48 may be provided with a recessed portion in which the roller 46 enters, thus allowing the former 28 to rock slightly on its pivot as seen in Fig. 5, by which means the nipper is enabled to grasp the lower flap of the blank, but this movement is not necessary. By the continued revolution of the mutilated roll the blank is withdrawn from the grasp of the formers and is passed through the paste rolls 84, 85 and thence to the folding rolls 86, 87.

In order to render the description of the operation of forming the bag intelligible, reference is made to Figs. 13 to 19 inclusive.

Fig. 13 shows the blank in the form of a flat tube, the leading end of the blank having four slits *a*, the portions between said slits constituting top and bottom flaps *b* which are acted upon by those portions of the suction formers nearest their outer or free margins. The leading end of the blank being passed between the hinged boxes, the flaps *b* are drawn apart by the separation of the formers adhering thereto by reason of the air being exhausted from the boxes. The movement of the former boxes on their hinges is rapid and the condition of the bag during this movement is shown in Fig. 14. It will be seen that the side flaps *c* are drawn into the position shown in Fig. 15 by the separation of the flaps *b*, thus defining the fold line *d*. During the folding of the flap *c* the blades enter into the triangular space between the flaps *c* and the folds *e*, the interior boundaries of this space being shown by the dotted lines in Fig. 15. The folds *e* are, therefore, held tightly against the faces of the formers and the folds thus produced on the dotted lines by the breaking of the paper, due to the inward fold of the flap *c*. The folds which are indicated by the dotted lines of Fig. 15 are accentuated by the paper being pressed down over the points of the formers, but it will be understood that the movement of the blades is so timed that they do not, or at least, should not contact with the paper at the bottom of such fold.

After the bag has been brought to the condition shown in Fig. 15, the platen strikes the flaps *c*, thus flattening them down. Then the lower former is rocked forward slightly, bringing the lower flap *b* into the grasp of the nipper roll, and the blank passes off between the nipper roll and its bed roll to the paste rolls, and the line of paste *f* is applied, as shown in Fig. 16.

After the paste is applied the end flap is folded down upon the body, as shown in Fig. 17, and then the blind fold *g* is made which lays the other flap *b* over upon the flaps *c*, as shown in Fig. 18. The bag is thus completed and is delivered from the machine in the condition shown in Fig. 19.

I have shown and described my improvements as co-acting mechanisms, but obviously some of said devices may be employed in machines having co-acting mechanisms of other construction than are described, and it will also be understood that all of the devices which I have shown are not necessarily employed in the described relation to each other, as for example, while I prefer in all cases to employ the movable platen its use may be dispensed with, and while the transversely moving blades or formers are employed in connection with suction boxes which have axial movement only, such blades might be employed in conjunction with reciprocating suction formers, and therefore the claims hereinafter made are not restricted or limited in their broader scope to the combination of the blades with such axially moving suction boxes.

I claim—

1. In a paper bag machine, suction boxes each constructed in a single section and hinged in planes parallel to the path of movement of the bag blank and on opposite sides thereof, their axes being fixed or non-movable, and means for moving said boxes upon their axes, substantially as described.

2. In a machine for making paper bags, the combination of the following instrumentalities, namely, suction formers, means for feeding the forward ends of flat tubular blanks between said formers and for clamping the opposite ends of said blanks, means for moving the formers on their axes by a single continuous movement, whereby the leading ends of the blanks are opened, means for holding the folds in the forming end of the bag against the faces of the formers and means for removing the partially completed bag, substantially as described.

3. In a paper bag machine, the combination with suction boxes hinged on fixed axes parallel to the path of the bag blank, means for moving said boxes upon their hinges to open the end of the blank, and transversely moving blades or formers adapted to hold the end of the blank against the face of the formers, substantially as described.

4. In a paper bag machine, the combination with hinged suction boxes, of two pairs of transversely moving blades, and a yoke connecting the outer ends of said blades in pairs and means for reciprocating said blades to cause them to move over the faces of the suction boxes, substantially as described.

5. In a paper bag machine, the combination with suction boxes hinged and movable upon fixed axes parallel to the path of the blank, of transversely moving blades adapted to enter the sides of the bellows fold of the blank, means for moving the suction boxes on their axes, and means for simultaneously moving the blades, substantially as described.

6. In a paper bag machine, the combination with the suction boxes each constructed from a single section hinged in planes parallel to but on opposite sides of the plane of movement of the bag blank, means for exhausting the interior of said boxes, and means for separating said boxes by a single continuous movement whereby the leading end of the blank is opened and the sides thereof folded in, means for clamping the folds against the faces of the suction boxes, means for clamping the blank while the boxes are being opened and means for taking away the partially completed bag, said several means being actuated in due order and relation, substantially as described.

7. In a paper bag machine, the combination with suction boxes hinged on axes parallel to each other and constructed in a single section, means for moving said boxes on their axes into a plane at right angles to the plane of movement of the bag blank whereby to open

the leading end of the blank and form the side folds therein, means for holding the folds against the face of the formers, and a reciprocating platen for flattening the folds, substantially as described.

8. In a paper bag machine, the combination with hinged suction boxes adapted to open the leading end of a bag blank, of means for withdrawing the blank from the boxes comprising a pair of rolls, one of which has its body mutilated or cut away, and a nipper for seizing the blanks substantially as described.

9. In a paper bag machine, the combination with hinged suction boxes adapted to open the leading end of a bag blank, of means for withdrawing the blank from the boxes comprising a pair of rolls, one of which has its body mutilated or cut away, and a nipper arranged at the margin of such mutilated portion, substantially as described.

10. In a paper bag machine, the combination with hinged suction boxes and cam actuated means of moving them on their hinges, of transversely moving blades and a cam for actuating said blades, the actuating cams for the boxes and the blades having a common axis whereby the simultaneous movement of said parts is insured, substantially as described.

11. In a paper bag machine, having suction boxes for opening the leading end of the blank, of exhaust pipes for said boxes, said exhaust pipes having telescoping sections and a swivel connection with the boxes, substantially as described.

12. In a paper bag machine a hinged suction box and an exhaust pipe connected therewith, said pipe having a swivel connection with the box, telescoping sections and a spring having a bearing upon said sections respectively, substantially as described.

13. In a paper bag machine, the combination with means for forming and severing a tube into bag lengths, of suction boxes for opening the leading end of the blank and feed rolls for the tube and for the bag lengths, the latter being adapted to move the bag lengths at a greater rate of speed than the tube is moved, substantially as and for the purpose described.

SYLVANUS T. MURCHIE.

Witnesses:
C. C. LINTHICUM,
N. M. BOND.

(No Model.) 15 Sheets—Sheet 1

S. E. PETTEE.

PAPER BAG MACHINE.

No. 542,447. Patented July 9, 1895.

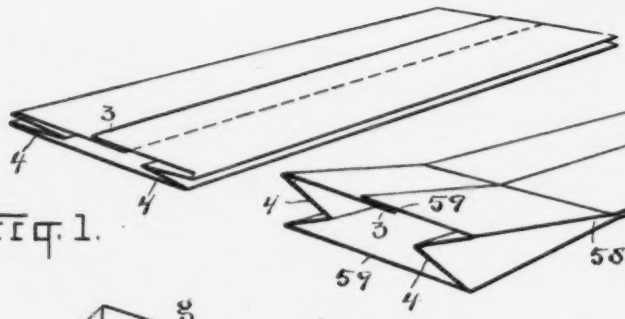

Fig. 1.

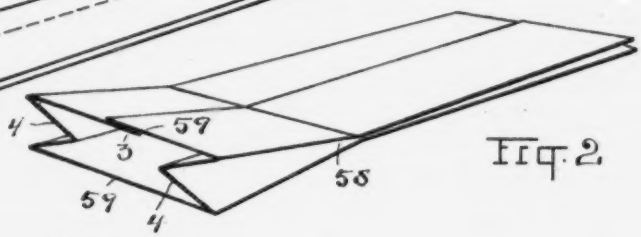

Fig. 2.

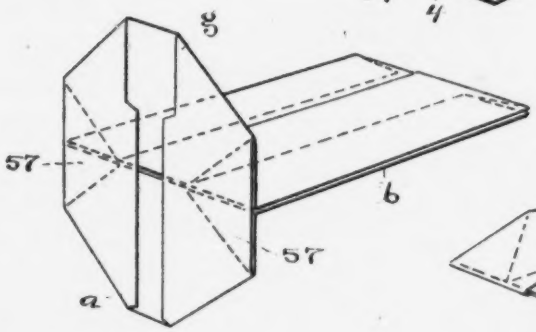

Fig. 3.

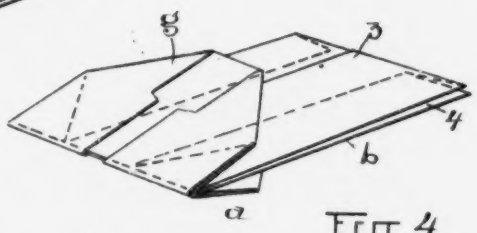

Fig. 4.

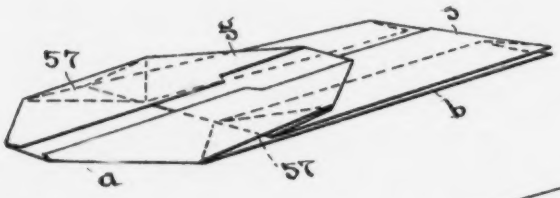

Fig. 5.

Fig. 6.

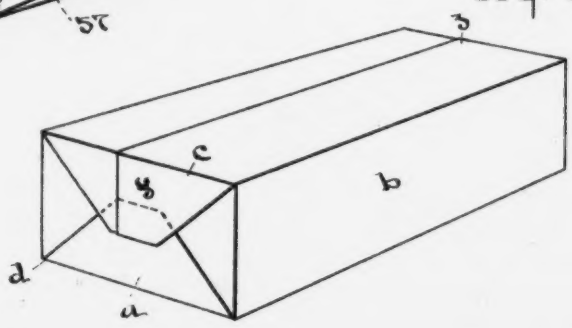

ATTEST.

Richard B. Moser.

G. L. Scharffer

INVENTOR

Simon C. Pettee

BY H. J. Fisher ATTORNEY

(No Model.) 15 Sheets—Sheet 2.

S. E. PETTEE.

PAPER BAG MACHINE.

No. 542,447. Patented July 9, 1895.

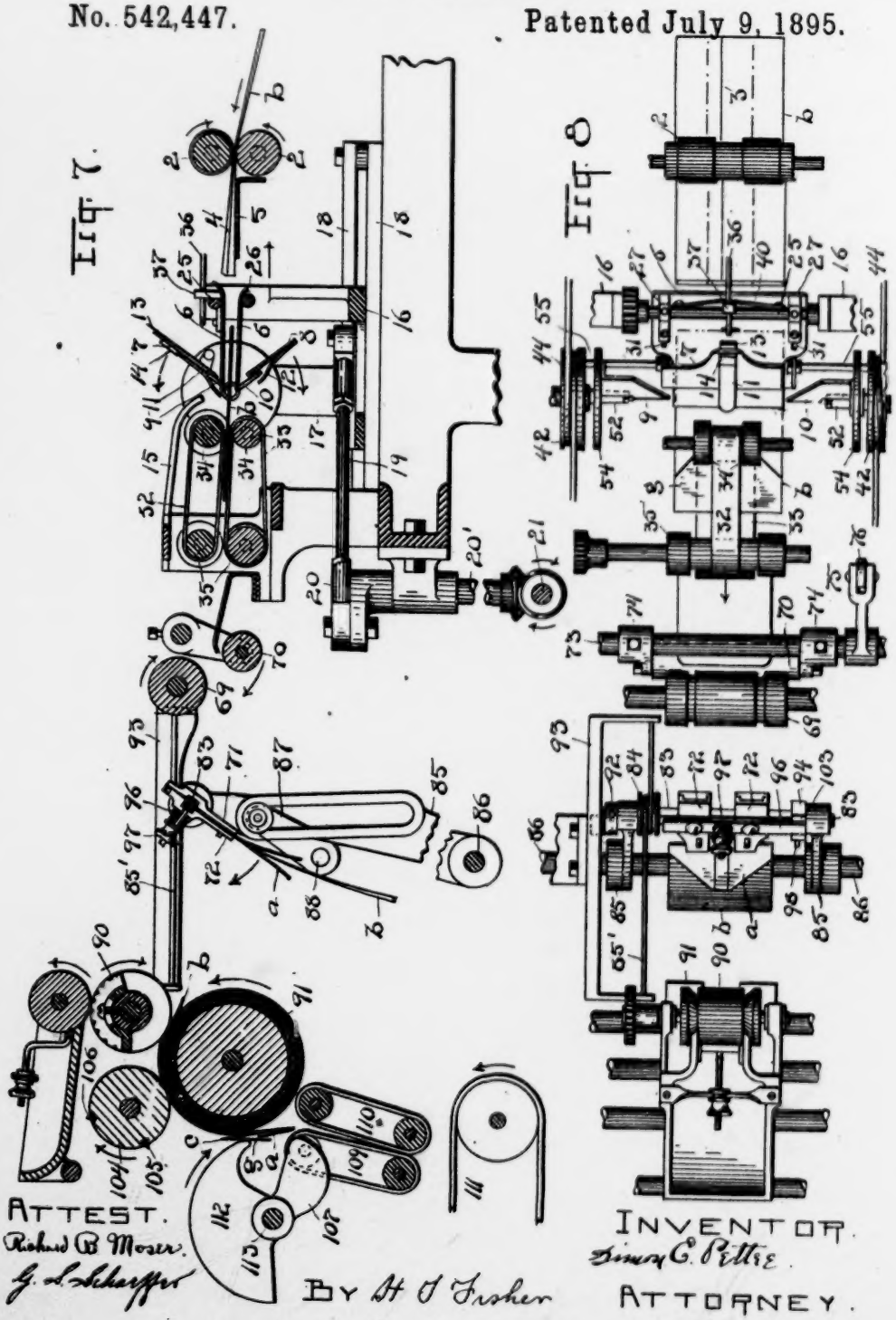

ATTEST.
Richard B. Moser.
G. L. Scharffer

BY H. T. Fisher

INVENTOR.
Simon E. Pettee.
ATTORNEY.

(No Model.) 15 Sheets—Sheet 3.

S. E. PETTEE.

PAPER BAG MACHINE.

No. 542,447. Patented July 9, 1895.

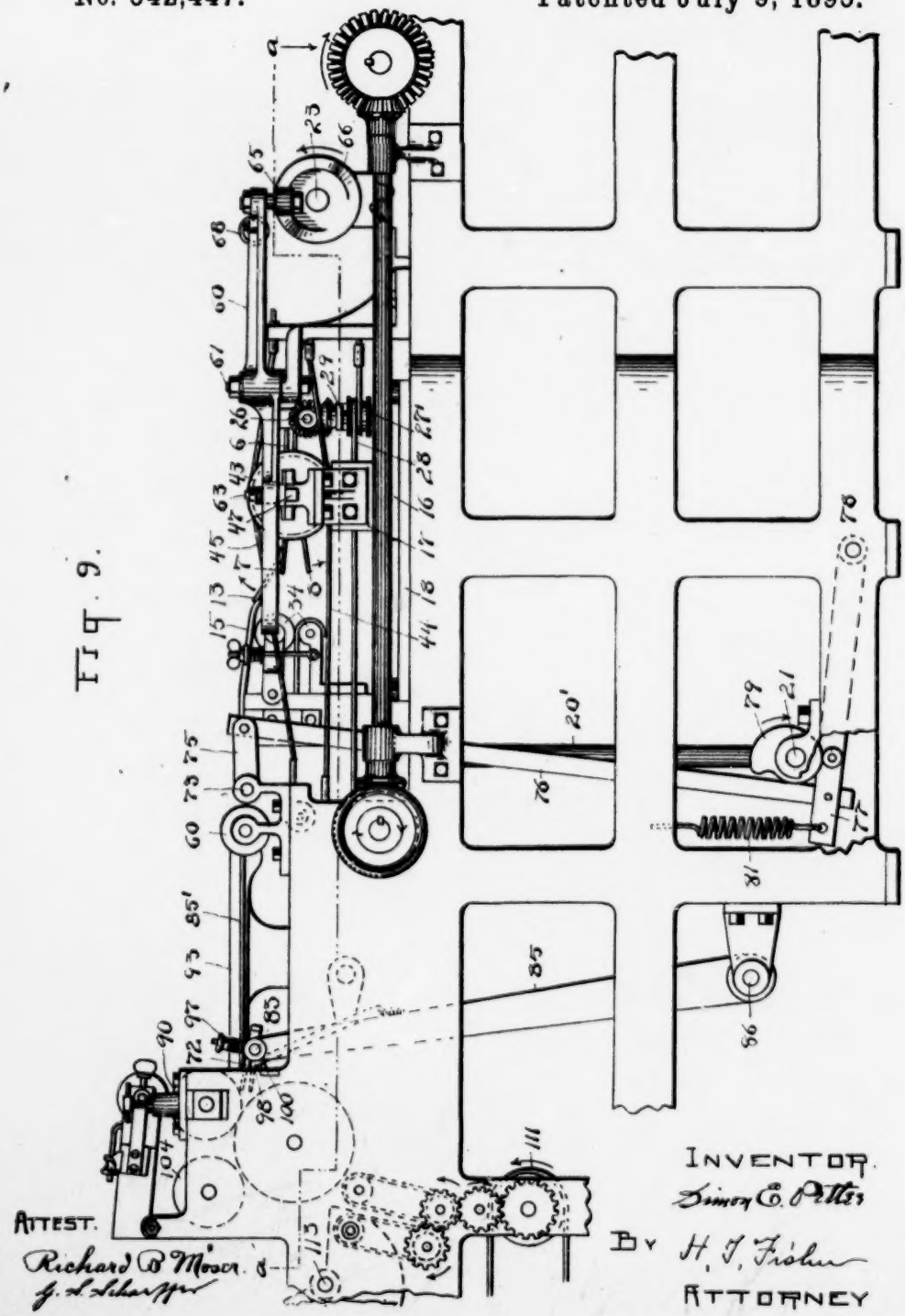

Fig. 9.

ATTEST.
Richard B. Moser
G. L. Scharffer

INVENTOR.
Simon E. Pettee
By H. T. Fisher
ATTORNEY

(No Model.) 15 Sheets—Sheet 4.

S. E. PETTEE.

PAPER BAG MACHINE.

No. 542,447. Patented July 9, 1895.

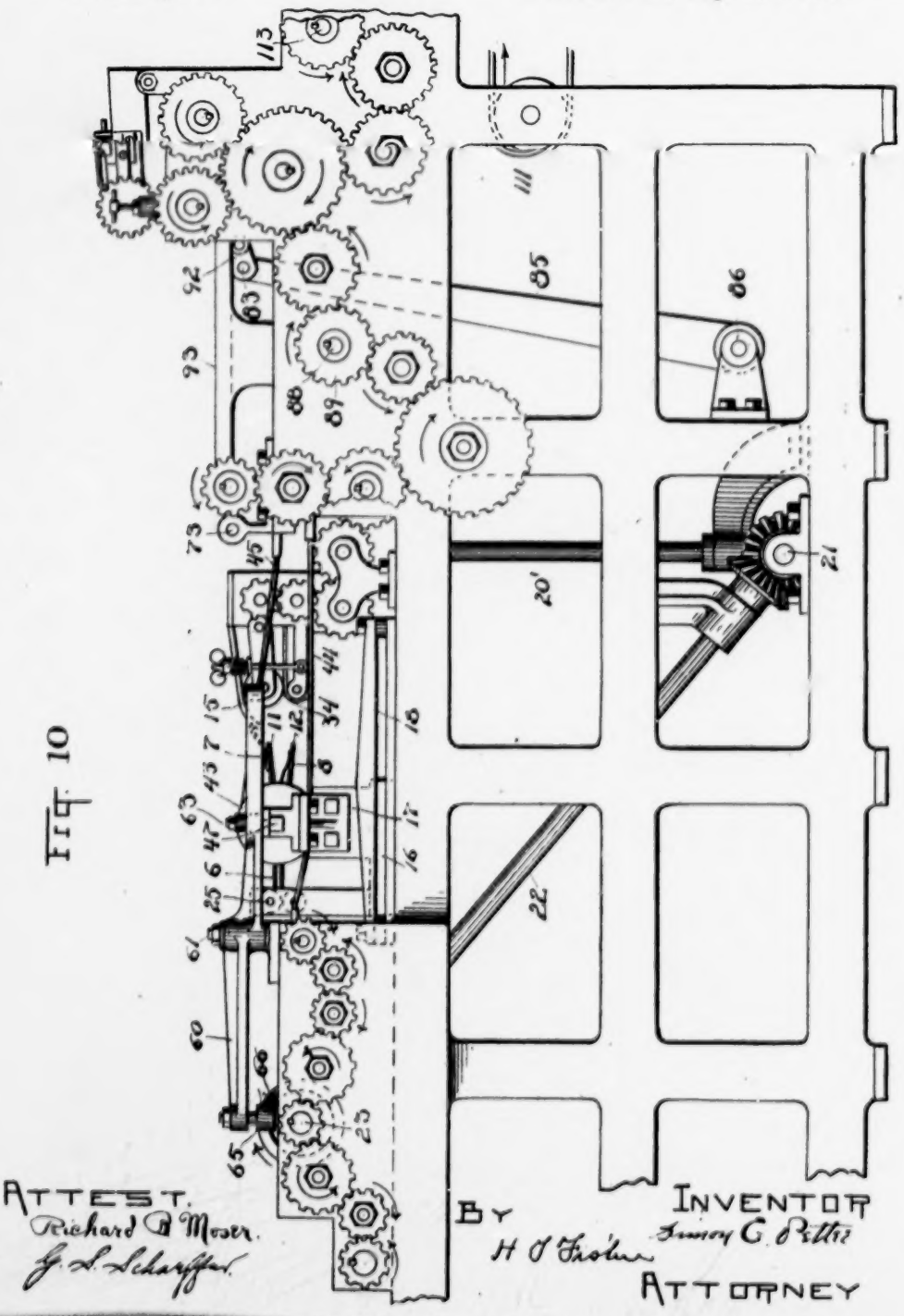

Fig. 10

ATTEST.
Richard B. Moser.
G. S. Scharffer.

BY
H. J. Frohn

INVENTOR
Simon C. Pettee

ATTORNEY

(No Model.) 15 Sheets—Sheet 5.

S. E. PETTEE.

PAPER BAG MACHINE.

No. 542,447. Patented July 9, 1895.

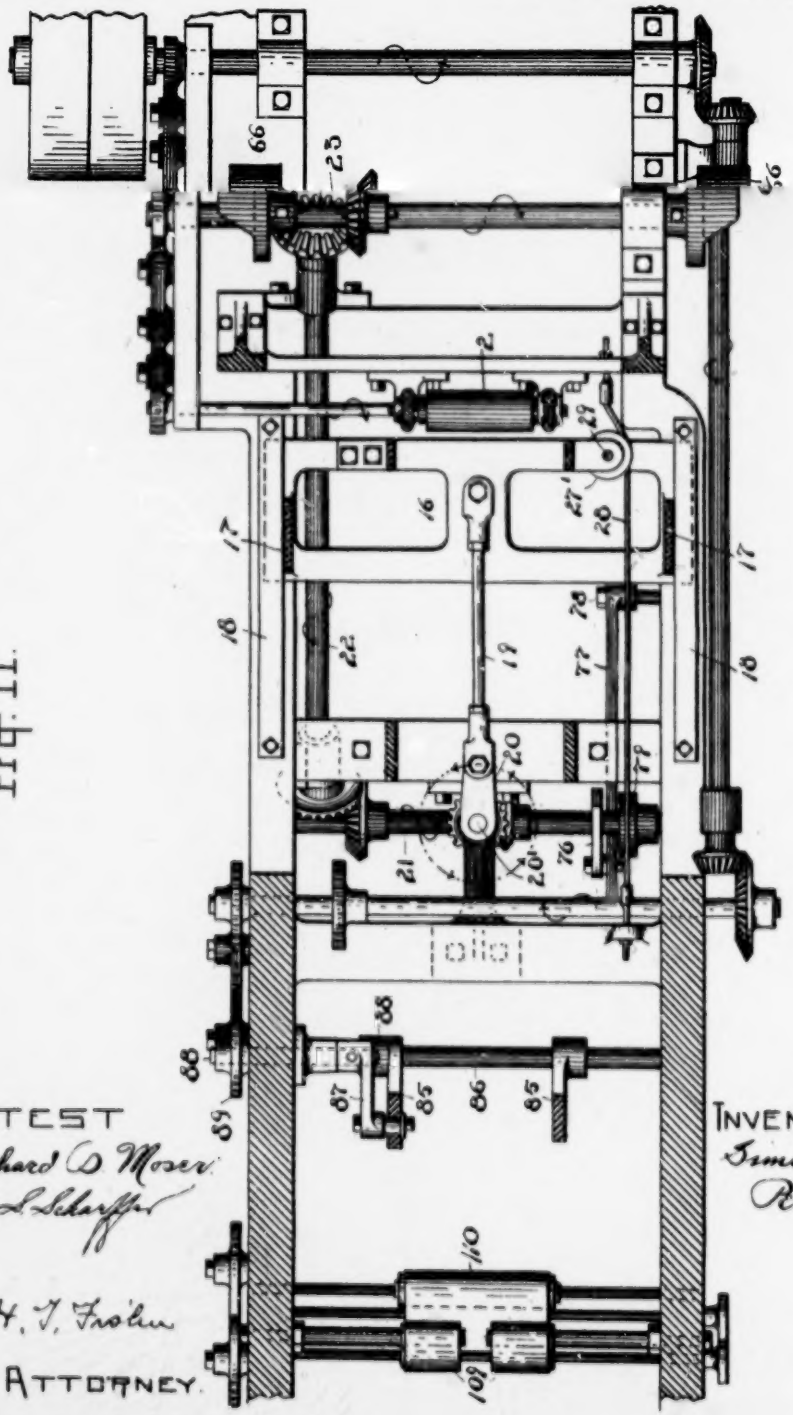

Fig. 11.

ATTEST
Richard D. Moser
J. L. Schaffer

INVENTOR
Simon E. Pettee

BY
H. T. Fisher
ATTORNEY.

(No Model.) 15 Sheets—Sheet 6.

S. E. PETTEE.

PAPER BAG MACHINE.

No. 542,447. Patented July 9, 1895.

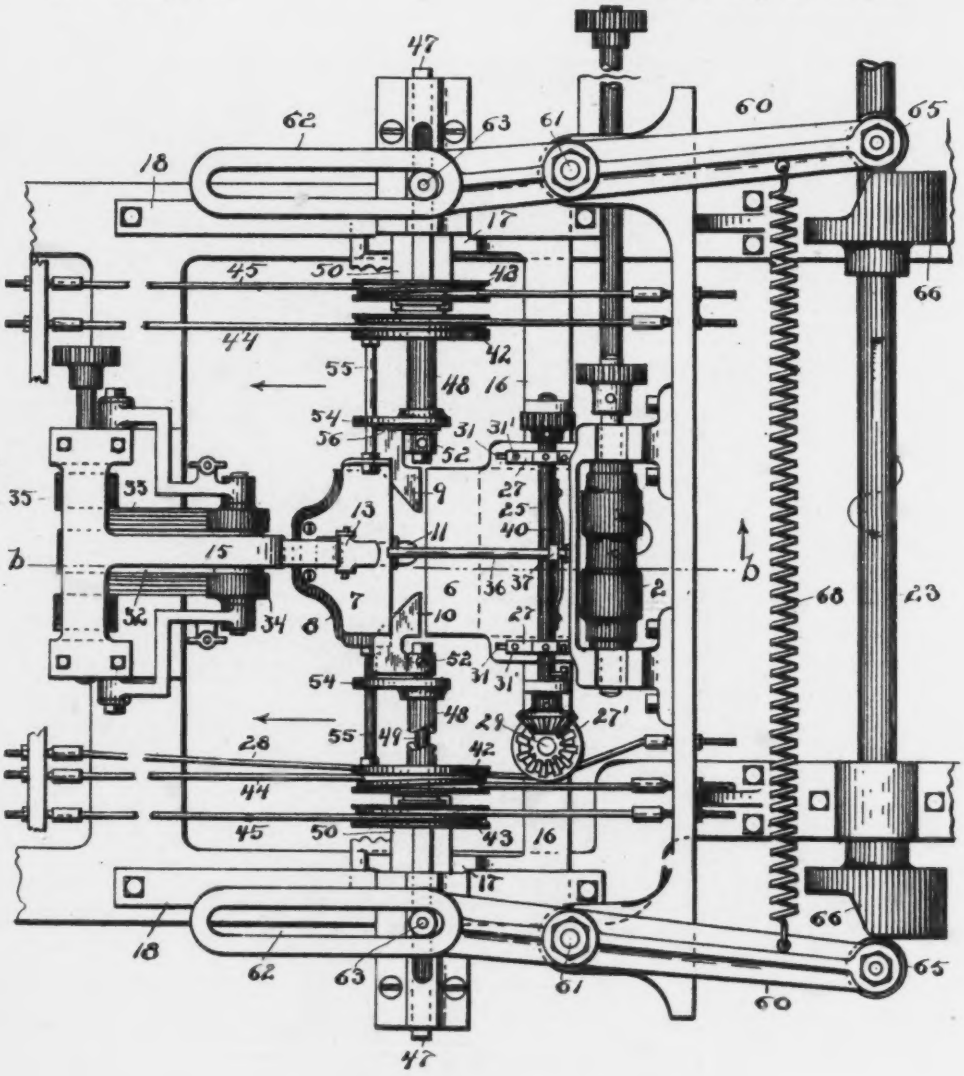

FIG. 12.

ATTEST.
Richard B Moore
G. L. Scharffer

BY
A. J. Fisher

INVENTOR.
Simon E. Pettee

ATTORNEY.

(No Model.) 15 Sheets—Sheet 7.

S. E. PETTEE.

PAPER BAG MACHINE.

No. 542,447. Patented July 9, 1895.

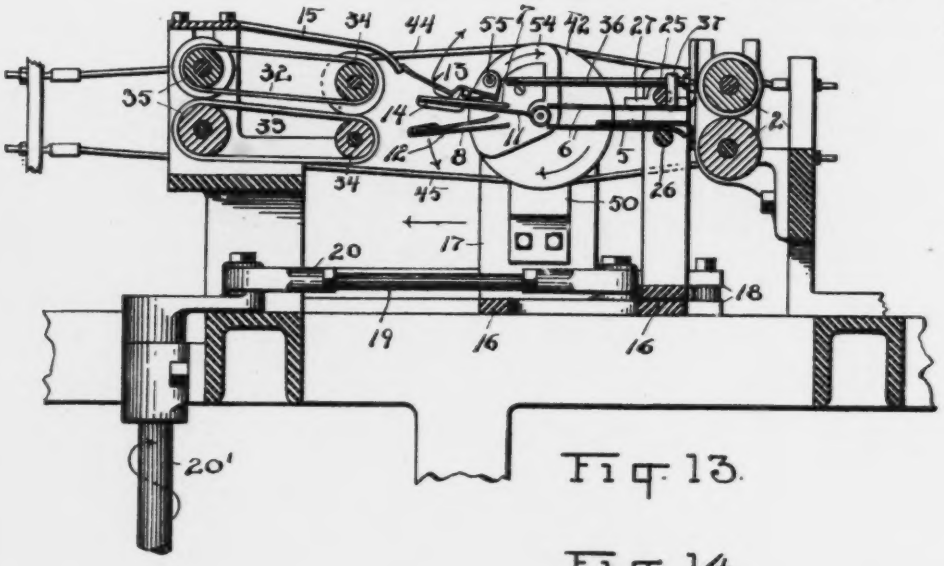

Fig. 13.

Fig. 14.

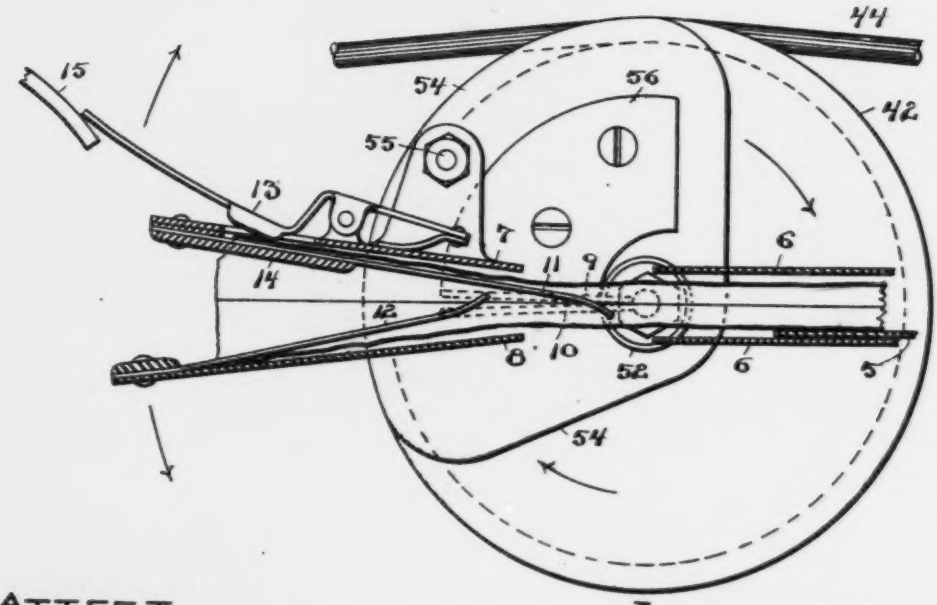

ATTEST
Richard B. Moser.
J. L. Schaffer

INVENTOR
Simon E. Pettee

BY H. J. Fröhlich

ATTORNEY

(No Model.) 15 Sheets—Sheet 8.

S. E. PETTEE.

PAPER BAG MACHINE.

No. 542,447. Patented July 9, 1895.

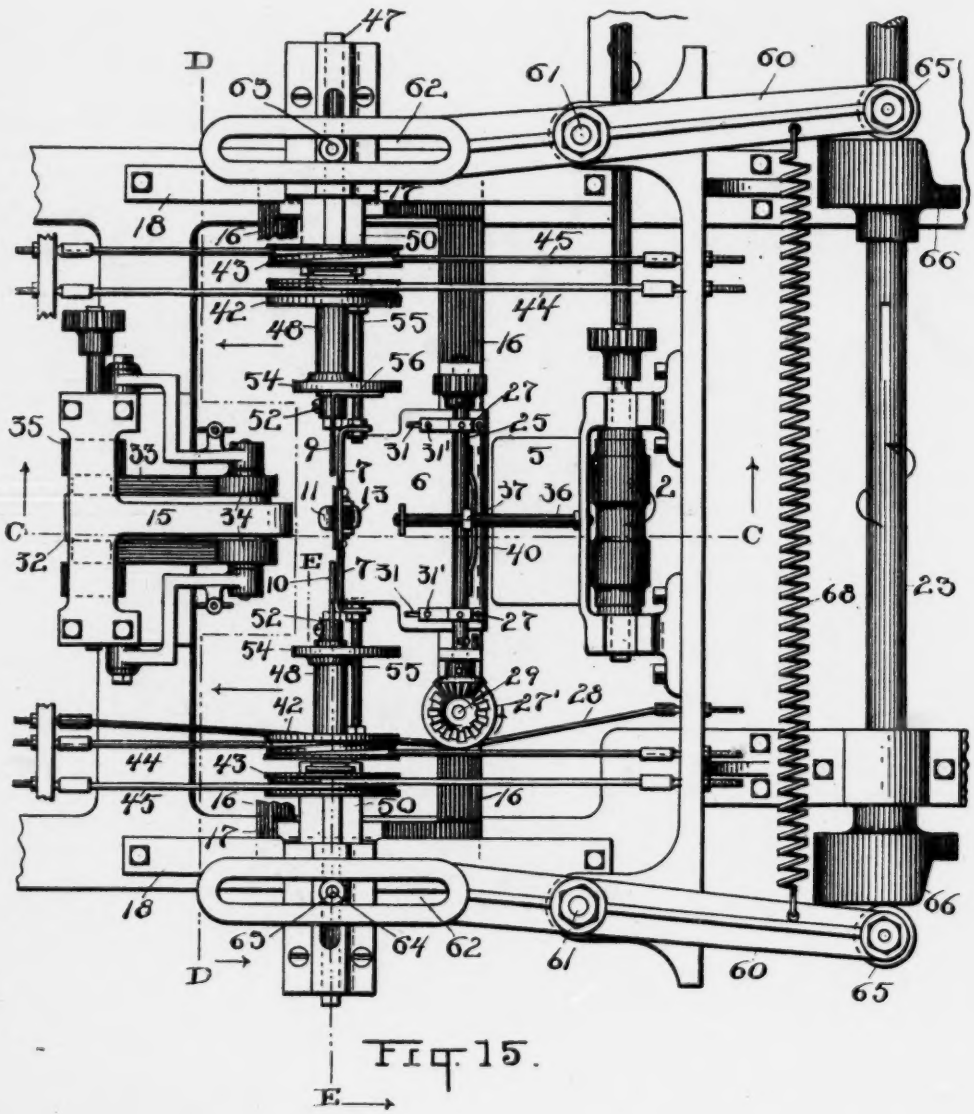

Fig. 15.

ATTEST.
Richard B. Moser.
G. L. Scharffer

INVENTOR
Simon E. Pettee.

BY H. T. Fisher
ATTORNEY.

(No Model.) 15 Sheets—Sheet 9.

S. E. PETTEE.

PAPER BAG MACHINE.

No. 542,447. Patented July 9, 1895.

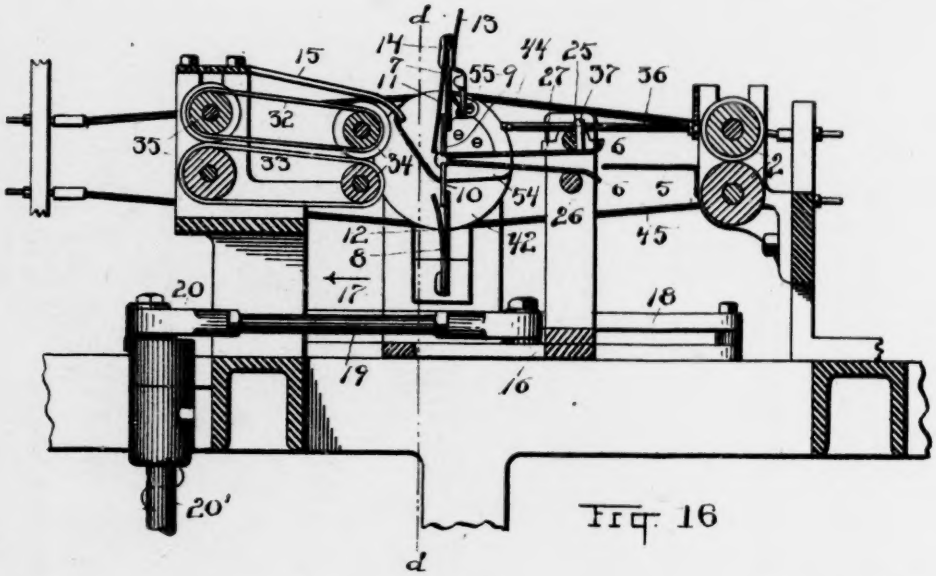

Fig. 16

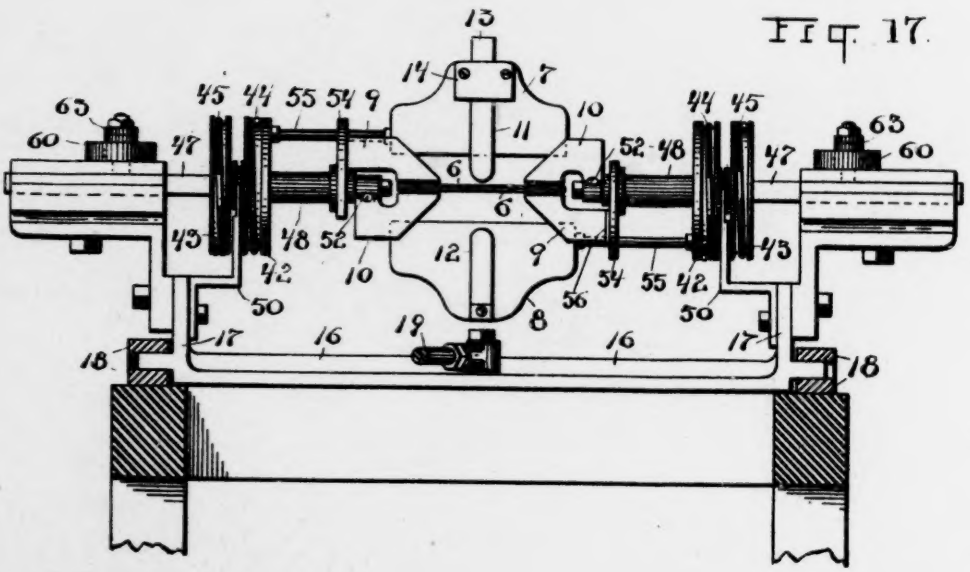

Fig. 17

ATTEST.
Richard B. Moser.
G. L. Scharffer

INVENTOR.
Simon E. Pettee

BY H. T. Fisher

ATTORNEY

(No Model.) 15 Sheets—Sheet 10.

S. E. PETTEE.

PAPER BAG MACHINE.

No. 542,447. Patented July 9, 1895.

Fig. 18.

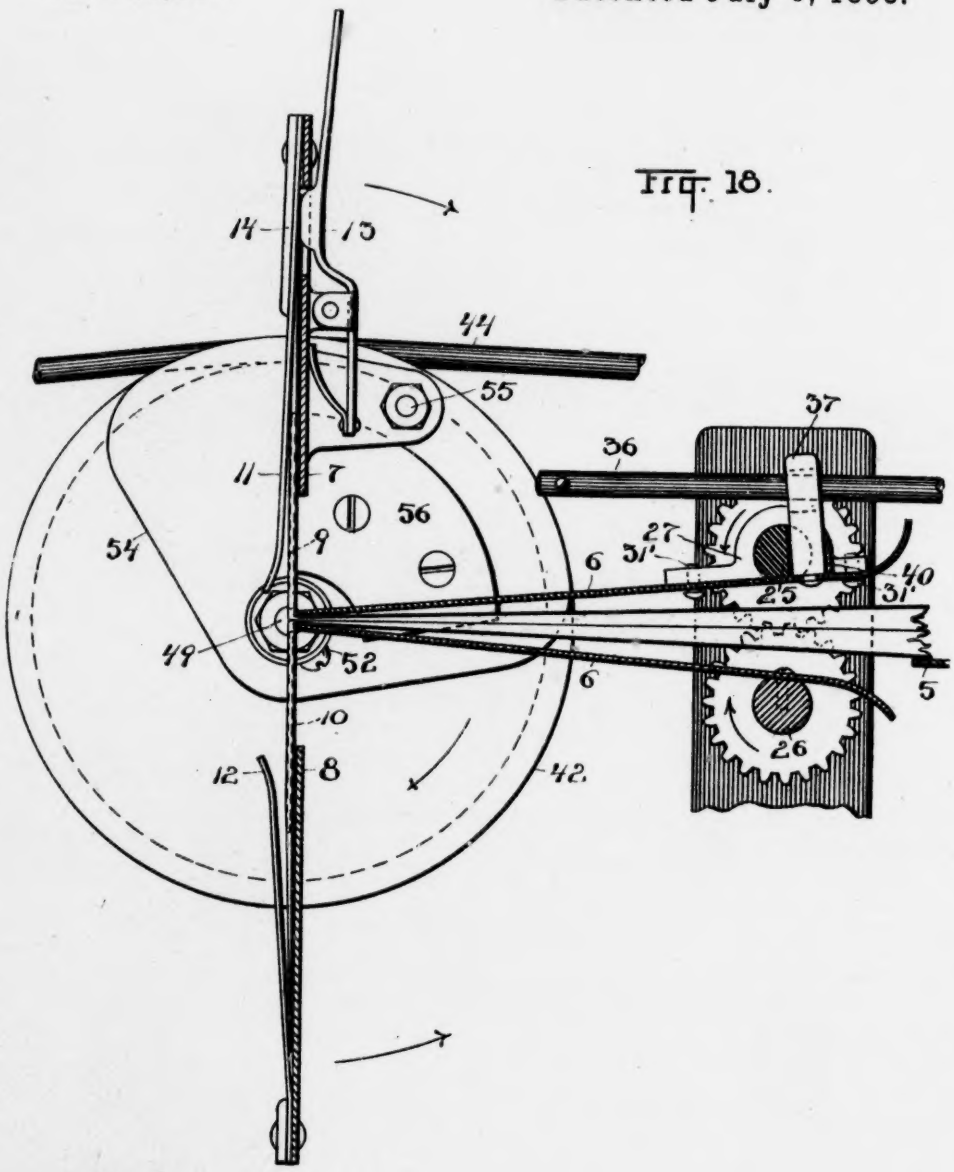

ATTEST.
Richard B Moore
G. L. Scharffer

INVENTOR.
Simon E. Pettee

By H. J. Fisher

ATTORNEY

(No Model.) 15 Sheets—Sheet 11.

S. E. PETTEE.

PAPER BAG MACHINE.

No. 542,447. Patented July 9, 1895.

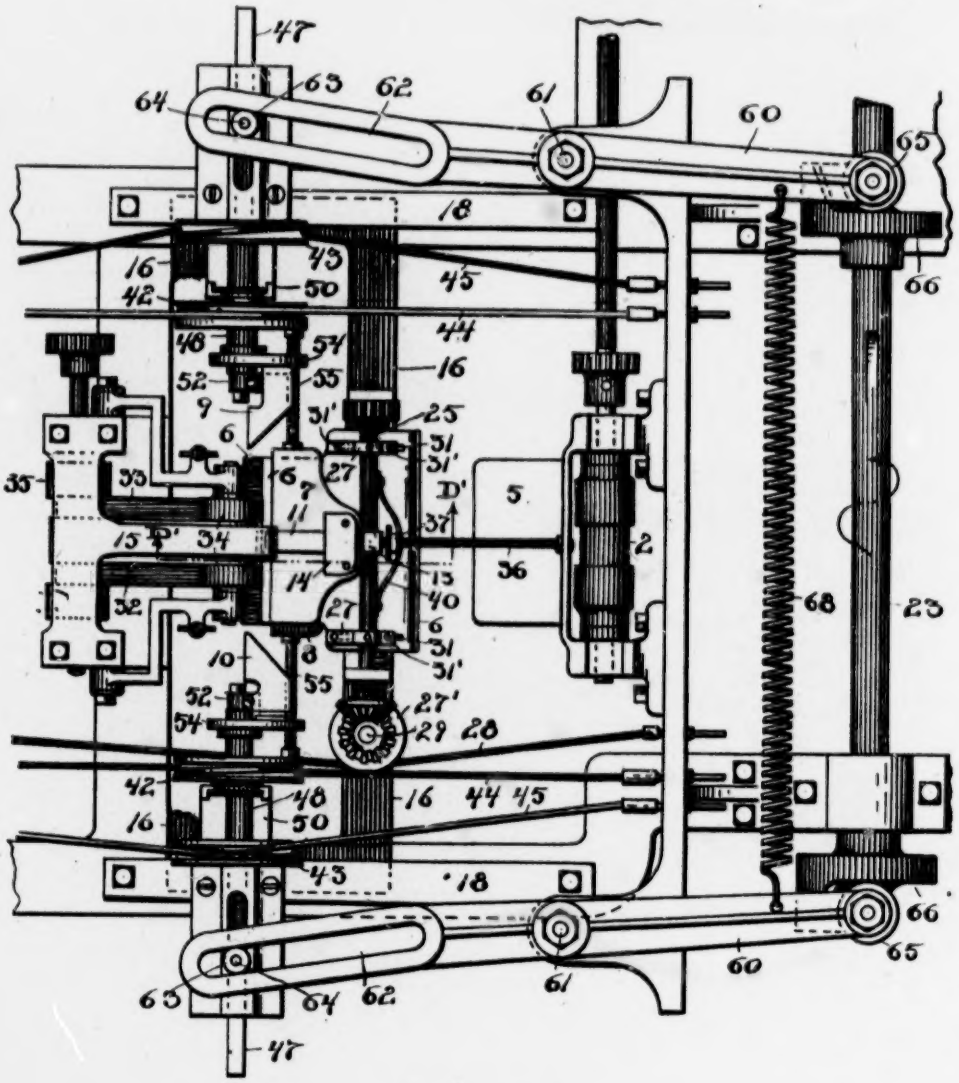

Fig. 19.

ATTEST.
Richard B. Moore
G. L. Scherffius

INVENTOR.
Simon E. Pettee

BY H. T. Fisher

ATTORNEY

(No Model.) 15 Sheets—Sheet 12.

S. E. PETTEE.

PAPER BAG MACHINE.

No. 542,447. Patented July 9, 1895.

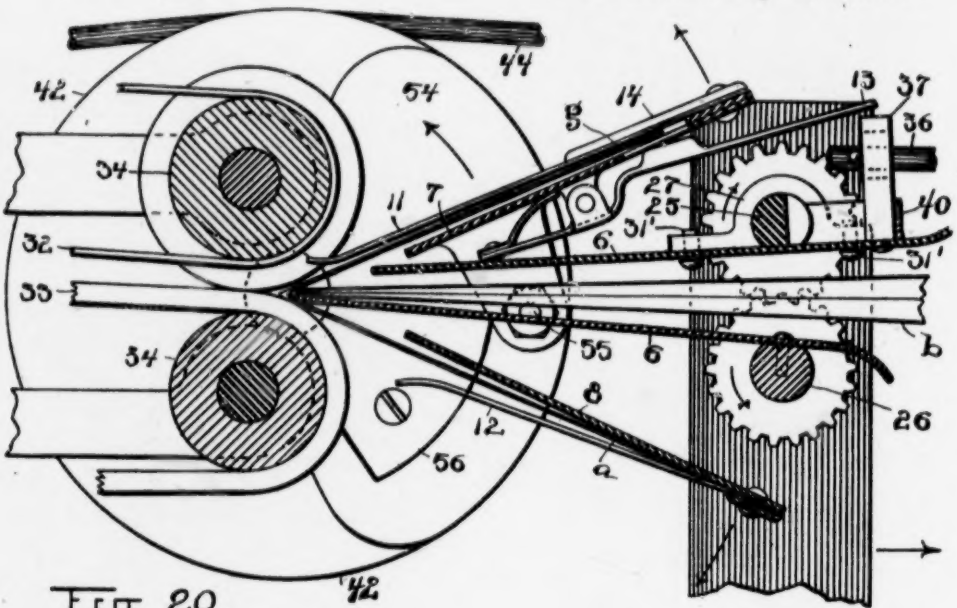

Fig. 20.

Fig. 21

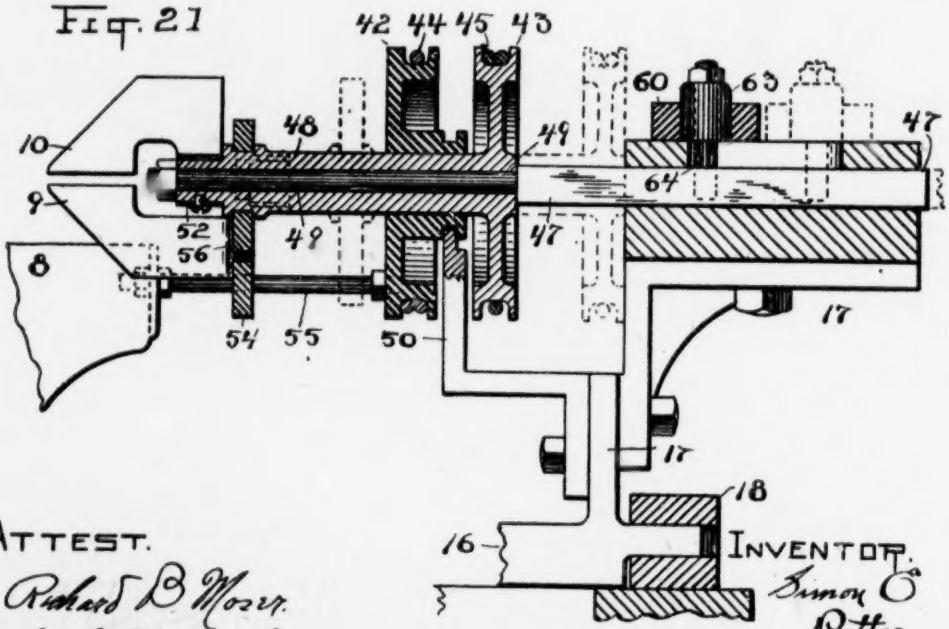

ATTEST.

Richard B. Moser.

G. L. Scharffer

INVENTOR.

Simon E. Pettee

BY H. J. Fröhlen

ATTORNEY

(No Model.) 15 Sheets—Sheet 13.

S. E. PETTEE.

PAPER BAG MACHINE.

No. 542,447. Patented July 9, 1895.

Fig. 22.

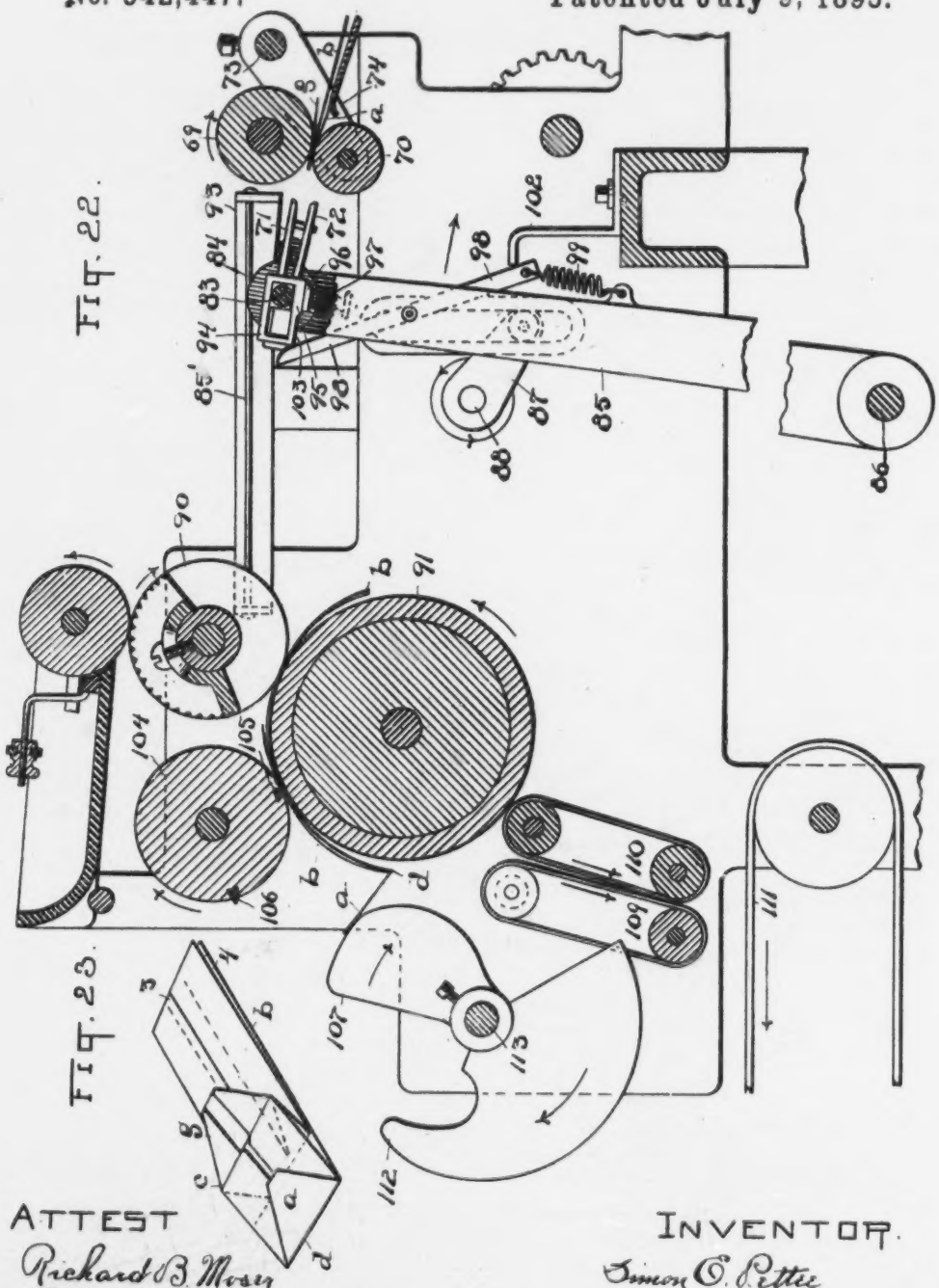

Fig. 23.

ATTEST

Richard B. Moser

J. L. Scharffer

INVENTOR.

Simon E. Pettee

By H. J. Fisher

ATTORNEY

(No Model.) 15 Sheets—Sheet 14.

S. E. PETTEE.

PAPER BAG MACHINE.

No. 542,447. Patented July 9, 1895.

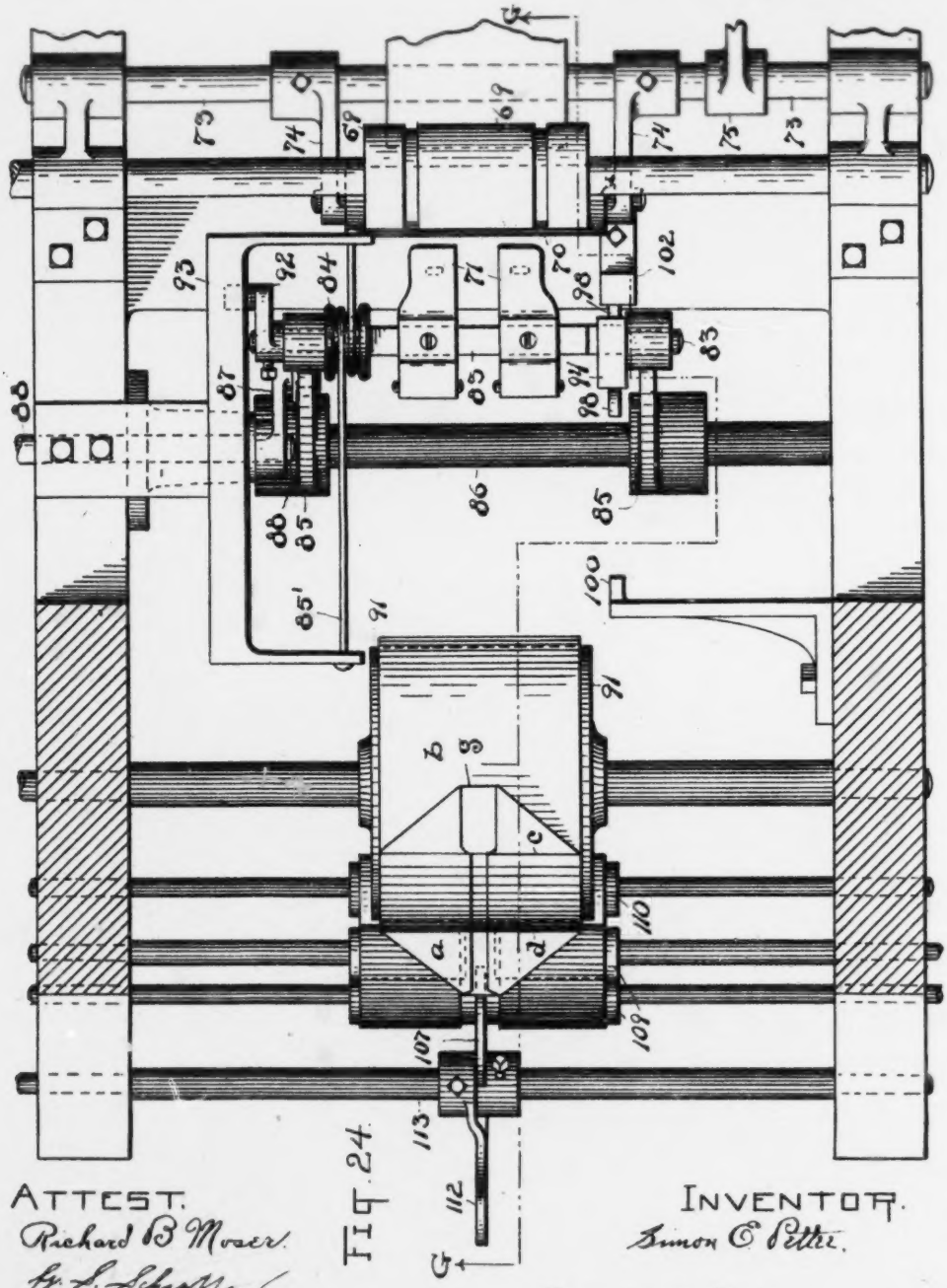

Fig. 24.

ATTEST.
Richard B Moser.
Jos. L. Schaffer

INVENTOR.
Simon E Pettee.
BY H. P. Fisher
ATTORNEY

(No Model.) 15 Sheets—Sheet 15.

S. E. PETTEE.

PAPER BAG MACHINE.

No. 542,447. Patented July 9, 1895.

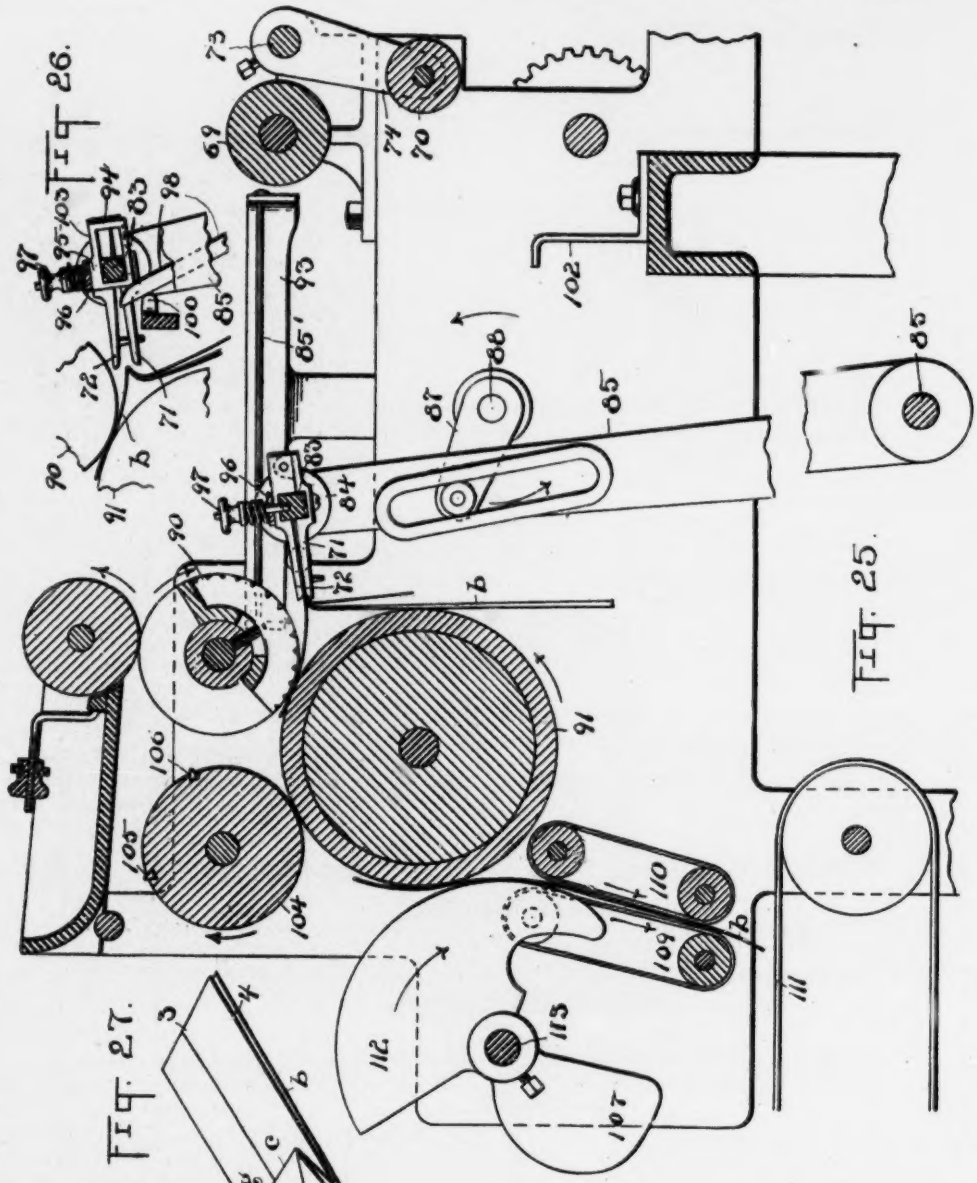

ATTEST.
Richard B. Moser.
G. S. Scharffer

INVENTOR.
Simon E. Pettee.

BY
H. T. Fisher
ATTORNEY.

UNITED STATES PATENT OFFICE.

SIMON E. PETTEE, OF CLEVELAND, OHIO, ASSIGNOR TO FRANK H. KELLY AND NORTON T. HORR, TRUSTEES.

PAPER-BAG MACHINE.

SPECIFICATION forming part of Letters Patent No. 542,147, dated July 9, 1895.

Application filed June 21, 1894. Serial No. 515,245. (No model.)

To all whom it may concern:

Be it known that I, SIMON E. PETTEE, a citizen of the United States, residing at Cleveland, in the county of Cuyahoga and State of Ohio, have invented certain new and useful Improvements in Paper-Bag Machines; and I do hereby declare that the following is a full, clear, and exact description of the invention, which will enable others skilled in the art to which it appertains to make and use the same.

My invention relates to paper-bag machines; and the object of the invention is to provide a machine which is adapted to produce square-bottom paper bags, all substantially as shown and described, and particularly pointed out in the claims.

In the accompanying drawings, Figures 1 to 6, inclusive, show a paper bag as it appears in the different stages or steps of its manufacture in and by my machine. Thus in Fig. 1 we have the bag-blank cut to the required length and folded and pasted along its overlapping edges, as is usual and well known in this line of manufacture, the sides of the blank being also tucked in along their center. Fig. 2 represents the blank when it is passed through the set of rolls immediately in front of the bottom-forming mechanism, with the parts about as they appear in Figs. 13 and 14. Fig. 3 shows the bag-blank after the first steps in folding the bottom have been completed, and the parts directly participating in this work are in the position shown in Figs. 16, 17, and 18 when the result is accomplished. This is what I call the "diamond fold." Fig. 4 shows the bag-blank with the bottom flaps bent back across its center toward its sides, so as to bring the bag to position to feed through the next succeeding rolls to complete the work of pasting and folding the bottom, the mechanism when this occurs being in the relation substantially as seen in Figs. 19 and 20. Fig. 5 shows the blank as it appears after it is taken from the rolls by the fingers shown in Fig. 22 and thrown across into the opposite position to pass through the pasting and finishing rolls, in which the free flap of the blank is engaged, as shown in Fig. 25. Fig. 6 shows a complete and open bag as it appears for use. Fig. 7 is a longitudinal central sectional elevation of the machine on a line corresponding to a central line through Fig. 8 and showing more particularly the mechanism which has to do directly with handling the paper bag and little else, the said view being in this sense fragmentary and mechanically incomplete. At the extreme right the paper for the bag is shown as it enters the first set of feed-rolls, side folds or plaits being already made therein, as seen in Fig. 1. Fig. 8 is a plan view of the mechanism shown in Fig. 7 and some additional and associated parts. These two figures represent the mechanism in which practically all the work of the machine is done, and they are divested of the operating mechanism as much as possible, so as to simplify the views and to more clearly develop the parts which have to do especially with the formation of the bag. Fig. 9 is a side elevation of the machine, the extreme front of the machine where the original fold and central pasting of the paper occurs being omitted, because it is not deemed a part of the present invention. This view corresponds in other respects to the mechanism shown in Figs. 7 and 8, but with all the details supplied. Fig. 10 is an elevation of the machine from the opposite side to Fig. 9 and representing substantially the same part of the machine as in Fig. 9; but the rear of the machine is at the right in Fig. 10, while the rear is at the left in Fig 9. It will be observed that the power-transmitting gears are mostly upon this side of the machine, and hence the need of this view. Fig. 11 is a horizontal sectional view on a line corresponding to *a a*, Fig. 9, looking down, and revealing especially the mechanism for actuating the sliding table or frame which carries the folding mechanism for producing the diamond fold, as revealed in Figs. 3 and 17. Fig. 12 is a plan view, enlarged, of the central part of the machine, having the diamond-folding mechanism and corresponding to the central part of Fig. 11, the horizontal side arms and cams for actuating the side folders being clearly disclosed in this figure. Fig. 13 is a longitudinal vertical central sectional elevation on line *b b*, Fig. 12, with the parts in the same relation to one another as in said figure. Fig. 14 is an enlarged sectional elevation of a detail of the mechanism

shown as in Fig. 13 and disclosing the central folders in the relation shown in Fig. 13 and a bag-blank in position therein as it appears when the spreading of the bottom to the diamond fold has just begun. Fig. 15 is a plan view of the mechanism disclosed in Fig. 12, but with the folding mechanism in the half-way position and the bag held therein in the form as it appears in Fig. 3. Fig. 16 is a vertical central sectional elevation of the parts of the folding mechanism shown in Fig. 15 and showing the central folders in the same place as in Fig. 15. Fig. 17 is a cross-section of Fig. 16 on line *d d* in front of the "diamond folders," but showing the full mechanism across the machine. Fig. 18 is an enlarged vertical central sectional elevation of the central folders and of certain associated parts on a line corresponding to C C, Fig. 15, the folders here being in the same position as in said figure. Fig. 19 is a plan view of the parts shown in Fig. 15, but with the table carrying the folding mechanism at the extremity of its rearward movement. When the position is reached the bag is held with its folds back as in Fig. 4, and the side folders are withdrawn and the bag is ready to be delivered to the next series of rolls. Fig. 20 is an enlarged view of the central folders and associated mechanism on line D' D', Fig. 19, and showing the bag-blank and the parts carrying the same in the position they occupy in Fig. 19 and ready to deliver the bag to the succeeding rods or carrier which deliver this blank to the transferring device. Fig. 21 is an enlarged partly-sectional elevation on line E E, Fig. 15, and designed to illustrate the construction and connections of the side folders which enter the plaits of the blank, strip and produce the side folds of the bottom, as hereinafter fully described, their position in the blank when they are spread corresponding to the central folders, as clearly shown in the elevation, Fig. 17, the central folders there having the position shown in Fig. 16 above. Fig. 22 is an enlarged elevation of the mechanism shown on line G G, Sheet 14, and is intended more especially to disclose the means for transferring the blank from the rolls shown at the left in Fig. 20 and at the right in this figure to the pasting and creasing rolls at the left of this figure. Fig. 23 is a view of the bag as it comes through the pasting and creasing rolls in Fig. 22, the corresponding blank being shown as passing through said rolls and getting the last transverse crease. Fig. 24 is a plan view of the mechanism shown in Fig. 22 with the pasting and creasing rolls removed and showing the bag in the same position as in said figure and just at the point of making the first back double fold after pasting, as seen at the left in Fig. 22. Fig. 25 is a central sectional elevation of the mechanism as shown in Fig. 22, but with the transferring device in the reverse position from Fig. 22 and showing it as feeding a bag into the pasting-rolls, one flap of the bottom of the bag having been thrown up into said rolls. Fig. 26 is a detail of the gripping and transferring mechanism shown in Fig. 25, but open, as it appears when the bag is released and carried on through the succeeding rolls. Fig. 27 shows the bag with its bottom completely folded and as it is delivered to the endless aprons at the end of the machine and is carried off to the drier.

The essential elements of this invention are centered, first, and most particularly, in the mechanism which produces the substantially diamond fold shown in Fig. 3, and then as a proper supplement in the mechanism which completes the fold. Leading up to this invention and necessary as a preliminary step, but not novel nor shown here, is mechanism for producing the plaited folds or plaits seen in Fig. 1. Having the paper thus folded, it passes thence to the first feed-rolls 2, Figs. 7 and 8, the paper having been first cut to the desired length for blanks farther back in the machine, but not now nor necessarily shown here. The blank as it passes through these feed-rolls has already been pasted along its overlapping middle edges 3, Fig. 1, and has been tucked or plaited in at the sides, so as to make the side folds 4 the full length of the blank. This pasting, folding, and tucking usually occurs before the bag has been cut to length, and hence before the blank appears at the rolls 2. The said rolls therefore receive and convey the blank forward over the table 5 and into the channel formed between the two top and bottom pinching-plates 6, which are close together, so as to form a comparatively narrow channel and keep the folds of the blank intact and at times to grip the same, as hereinafter more fully described. These plates thus arranged serve as feed and holding plates for the folding-wings 7 and 8 at the middle or center of the machine and the side folders 9 and 10 at each side.

For convenience and simplicity in description the side wings and their operating mechanism at one side alone will be specifically described, because these parts are the same on both sides, and if the construction of one set of wings be understood both will be understood. Like parts upon the opposite sides also bear like designations.

The middle and larger wings 7 and 8 perform the larger part of the work in making the diamond fold; and in order that their construction and operation may be understood attention is first called to Fig. 14, where the said wings are in position to receive the bag-blank. It will be noticed that in this position they are nearly horizontal and very near to each other. It will also be noticed that they have upon their inside thin but fairly firm tongues 11 and 12, respectively, made of strips of suitable sheet or other light metal, the tongue 11 extending inward some distance beyond the wings 7 and 8 and to about the mouth of the channel between the two pinching and feeding plates 6 and 6.

These tongues may be, say, an inch or more in width, and the tongue 11 first enters the blank centrally, so as to separate its upper and lower folds, and the tongue 12 lies under the cover of the tongue 11 and takes the lower fold, and the two tongues together guide the blank into the relation and position shown in Fig. 14 and serve at last, by reason of their position and arrangement, not only as initial separating-fingers for the sides of the bag or blank, but as the blank slides up to the pinching-point, as in Fig. 14, to hold the sides at their centers against or with the wings 7 and 8, very much as they would be held between the thumb and forefinger of the hand, and their action is precisely the same as the action of the human fingers would be in the same place to hold the sides of the bag and help to spread them.

Over the upper wing 7 is a spring-pressed arm 13, which has a bearing through an opening in the wing 7 upon the top side of the bag and presses it against or upon the inner plate 14. To raise this spring-pressed arm when the parts are in the position shown in Fig. 14, so that the bag may move up into the wings into proper position to be held and folded, a bar 15, or its equivalent, is employed, which lifts the said arm momentarily as the bag slips under. Then as the wings begin to spread or open, the arm 13 at once bears down upon the bag, and it is held and the bottom folding occurs in the manner described. Now the further movement of these wings is toward the position shown in Fig. 18, where they stand in vertical and parallel planes. To reach this position, I employ a horizontally-sliding frame extending across the machine and having a base 16, with uprights 17 at its end, and sliding between two upper and lower guide-pieces 18 on the main frame of the machine, as seen in Figs. 7 and 17 and other views. This guide frame or table carries the folding-wings which make the diamond fold, and their opening and closing is related to the forward and backward movements of this frame, as hereinafter further described. Thus when the said frame is in the first or starting position it appears as shown in Figs. 11 and 12, plan view, and in Fig. 13, side view. In Fig. 11 there is shown a connecting-rod 19, pivotally united with the center of frame 16 at one end and at the other end with the horizontally-rotating arm 20. The arm 20 is on an upright shaft and is actuated by suitable gear on the shafts 20′, 21, 22, and 23, and connecting thence with the power. When said crank-arm 20 is turned at right angles to the position shown in Fig. 11 the central folding-wings 7 and 8 are in the parallel vertical position shown in Figs. 15 and 16, and when the said arm has taken position at the opposite or other extremity of its throw the frame 16 is carried to the third position and the folding-wings 7 and 8 and the connecting mechanism are in the position shown in Figs. 19 and 20.

I have referred to the guide-plates 6 arranged immediately before the folding-wings 7 and 8 and as providing a channel or passage-way for the paper to said wings. To do their work effectively and to perform their full function these plates should have a momentary pinching effect at their free ends at certain stages of the folding and the upper one of said plates should have a backward sliding movement in respect to the other, as will now appear. Thus, referring to Fig. 18, we see said plates 6 and 6 supported, respectively, on the shafts 25 and 26, the lower plate being rigid with shaft 26 and the upper plate fixed to yoke 27. Hence when the shafts are rotated toward one other the free end of lower plate 6 will be raised and the extremities of the plates be brought together to pinch and hold the blank, as in Fig. 18. Rotation of these shafts is effected through a sheave 27′, Fig. 11, working on a stretched cable or cord 28. This sheave is supported in a vertical shaft 29, Fig. 9, and has gear meshing with another gear on the shaft 26. Shaft 26 has gears meshing with gears on the shaft 25, so that when the frame 16 moves from its starting or first position rearward the said shafts 25 and 26 are rotated toward each other.

The pinching of the blank is necessary in order that the folding may be perfectly accomplished, and the instant that the said plates 6 come together they can of course move no farther, and then as the frame 16, carrying sheave 27′, moves forward to the second and third positions the sheave necessarily must slide on the cable 28. This operation not only continues through the operation of folding the bottom by means of the wings hereinbefore described, but until the parts assume substantially the position seen in Fig. 20. In this figure it will be observed that the blank is being delivered to the endless carriers 32 and 33 running over suitable rolls 34 and 35, and the lower plate 6 extends directly into the space between said rolls and carriers, while the upper plate is drawn back in respect to the lower one a sufficient distance to make room for the blank to be grasped between the said rolls. In Figs. 16 and 20 it will also be noticed that there is a fixed rod 36 centrally over plate 6, which has a stop-pin through its end, and the upper plate 6 has a stud or post 37, having said rod sliding through it. As the parts are carried forward by the sliding frame 16 toward the position shown in Fig. 20 the said stud comes in contact with said pin, and then as said frame slides farther along the said upper plate is detained, and the said plate has just enough sliding movement in its slots 31, Fig. 12, to allow this to be done. The said slots slide on the screws 31′ at the sides of said top plate 6, and which holds it on brackets 27 at its sides. In this way the top plate 6 is temporarily carried back, as in Fig. 20.

Referring to the mechanism for taking the blank from the wings at Fig. 20, it will be seen that the upper rolls 34 and 35 are re-

duced at their center, while the lower rolls 34 and 35 are of the same cross-section throughout, and the upper belt 32 is only about half the width of the lower belt 33. However, any construction that will serve to promptly take the blank from the plates 6 and carry it forward for further treatment will serve the purpose of this part of the invention.

When the sliding carriage or frame 16 is returned to its starting position the plates 6 are again open, and remain that way until the carriage returns. The back-and-forth movements of the carriage necessarily are rapid, and the actions of the machine involved in the immediately foregoing description are in a sense momentary and can scarcely be observed with the eye because they are so speedy in operation. A leaf-spring 40, Fig. 8, bearing against the post 37, serves by its own action to carry the top plate 6 forward again, so as to bring its extremity again into proper engaging relation with the lower plate 6, this occurring when the said parts are moving back toward first position.

The folding-wings, central and side, supported by the carriage 16, are turned primarily by sheaves 42 and 43, which have wound about them the stretched cords or cables 44 and 45, Fig. 12. When the carriage 16 travels in either direction the said folding-wings are turned in one direction or the other, according to the direction of such travel, and connecting and actuating mechanism is provided for each of said sheaves, as shall now appear.

Referring to Fig. 21, it will be seen that upon the carriage 16 there is a bracket or end support 17, as hereinbefore described, and that in this arm or support is a shaft 47, which has a square or equivalently-formed body (seen also in Fig. 9) and is adapted to slide inward and outward within limitations, as the operations of the mechanism require. Upon this shaft is supported the pulley or sheave 43, having a long inwardly-extending sleeve 48, which goes to the inner extremity of the said shaft 47 and is held thereon by a nut to prevent its coming off. The shaft 47 has a spiudled portion 49, upon which the sheave 43 and its sleeve 48 are adapted to rotate, and they are caused to rotate by the cable or cord 45 about said sheave, as before described. At the side of the sheave 43 and on its sleeve is the sheave 42, which has a hub that turns freely upon the sleeve 48, and the said sheave 42 is prevented from sliding either to the right or to the left and is kept in its place to rotate therein by an elbow-arm 50, Fig. 21, rigid with bracket 17 and engaging a groove in the hub of the sheave 42. This sheave likewise is adapted to turn when the carriage 16 and the sleeve 48 upon which it rotates are moved back and forth. It will be observed, however, that the said sheaves 42 and 43 are oppositely wound by their cables, so that they will turn in opposite directions whichever way the carriage moves. Now, it will be further seen that the wing 10 has a sleeve 52, held by a set-screw on the reduced extremity of the sleeve 48, so that it will turn therewith. By the side of this sleeve 52 is a segment 54, held within flanges or their equivalents on the sleeve 48 and adapted to turn thereon, and this segment is made rigid with the sheave 42 by means of a rod 55 fixed in said sheave and passing through said segment. The wing 9, Figs. 17 and 21, has a right-angled flange 56, through which it is firmly fixed to the segment 54, and each of the middle folding-wings 7 and 8 has a right-angled flange, through which it is rigidly secured to the initial extremity of the said rods 55.

Now, observing further the construction disclosed in Fig. 21, it will be seen that both the side folders 9 and 10 are supported on the sleeve 48, but that the wing 10 is rigid therewith and the wing 9 is free to rotate in respect thereto by reason of its control through sheave 42, rod 55 fixed therein, and segment 54. Hence any sliding of wheel 43 back and forth in respect to wheel 42—as, for example, from the wheel in full lines to the wheel in dotted lines—will carry both wings back with it. In like manner the movement of the said sheave 43 from the dotted position to the full position will carry the said wings 9 and 10 forward, as in Fig. 21. It will further be observed that, since wing 9 is rigid with segment 54 and middle wing 8 is rigid with the end of rod 55, which passes through said segment and is free to slide therein, the wings 8 and 9 will at all times sustain the same relation to each other in respect to their plane or face, so that if the wing 8 be in one or another of its positions in the three movements hereinbefore described the wing 9 will be in the same relative plane or position whether it be withdrawn from the bag or participating in the folding operation. It also is clear that since the sheaves 42 and 43, which control wings 9 and 10, are arranged to rotate in opposite directions they will also turn these wings in respect to each other according to the direction of their rotation. It therefore follows that when the wings 7 and 8 are in a vertical plane, Figs. 16 and 17, the wings 9 and 10 will be so far rotated as to stand in precisely the same plane therewith and they will occupy the position shown in Figs. 16, 17, and 18, where they overlap the corners of the middle wings and produce the half-diamond-shaped tuck of the paper indicated by 57 in dotted lines, Figs. 3 and 5.

It should be understood that when all the wings are at the initial position to begin the folding of the bottom of the bag the middle wings engage the edges across the bottom end, as seen in Fig. 14, and then the said wings 9 and 10 are brought practically together side by side and enter near the plaits or folds of the bag at about the point marked 58, Fig. 2. The two middle wings at the same time engage the edges marked 59 in said figure. Now, as the wings 7 and 8 spread toward and

take the half-way position, Figs. 16 and 18, the side wings are caused to open in like manner and degree and are brought to stand at the half-way place in the same plane with the middle wings, as shown in Figs. 16 and 17. Again, it may be said that when the parts reach this position the diamond fold shown in Fig. 3 is made, and it then only becomes necessary to throw the flaps or sides of the bottom, which now stand in vertical position, back into the position shown in Fig. 4, so as to get the bag into a position to carry it forward through the machine and do the further folding required. Hence as the carriage 16 and its associated mechanism move forward to the third position and the middle folders are thrown back, as shown in Fig. 20, the side wings 9 and 10 have done their work and are withdrawn and the top and bottom plates 6 release the bag and the bag becomes free to be fed into the rolls, as seen in Fig. 20. To effect this inward and outward movement of the side wings at the time and in the manner required to cooperate with the middle wings and the other parts of the machine, I employ two horizontal levers 60. (Shown in Figs. 12, 15, and 19.) These levers are pivoted at 61 and are provided with longitudinal slots 62, in which operate rollers 63, Fig. 21, on the stud 64 fixed upon the shaft 47. The bearing for this shaft, which is angular at this part, like shaft 47, is provided with a slot, in which the stud 64 is adapted to move back and forth, and at the other end of the lever 60, Fig. 12, there is another roller 65, which works upon the cam 66 fixed upon the cross-shaft 23, which is driven by gear and power connections at the other end, not necessary to particularly describe. This shaft 23 is so geared as to bring the cam 66 into action at the right times.

Now, following Figs. 12, 15, and 19 in succession, we find the shaft 47 moved inward and the wings 9 and 10 of consequence inward also to enter into the side folds or plaits of the bag for the purpose of turning the same in the fold, as hereinbefore described. This occurs before the frame 16 carrying the wings has begun to make its movement from first to second position. The said cam 66 holds the lever 60 with its slot 62 parallel to the sides of the machine, so that when the parts come to the middle position, as seen in Fig. 15, the said slots are still in parallel position and the wings are still projected inward and not withdrawn from the bag. All the wings are now in vertical position and the diamond fold is made. Now, since the side wings are no longer required and have done their work by tucking the stock in upon the sides, as indicated by 57, Figs. 3 and 5, they should be withdrawn, and they are withdrawn shortly after the carriage and its wings pass the center point in the slot 62, and then the side wings are withdrawn and all the parts take the position seen in Fig. 19. When this occurs the spring 68, which connects the inner ends of the levers 60, draws said levers together, throws the slots at the ends thereof at an inclination to the axis of the machine, and the side wings are drawn back, as shown in Fig. 19. They remain in this position until the parts are carried back to starting position and it becomes necessary that they be again thrust forward to engage the folds of the next blank and go through the same operation as before, and thus the action of these parts is repeated over and over as bag after bag is folded and passed through the machine.

It will, of course, be seen and understood that while the side wings upon the opposite sides of the machine are operated in exactly the same manner by similar mechanism, they move in reverse directions to each other by reason of being upon opposite sides of the machine. Furthermore, all the parts of the mechanism participating in the foregoing operations are arranged and connected to co-operate and to do their work automatically.

When the blank has been folded, as seen in Figs. 4 and 20, it is delivered through the carrying-rolls 34 and 35 and the endless carriers 32 and 33 over the same to the rolls 69 and 70, Fig. 22, and thence to the transferring device, having fingers 71 and 72, which takes the bag from said rolls. In order that the movement of the bag may be free and unobstructed as it enters the space between the rollers 69 and 70 I have deemed it best to make the roller 70 movable in respect to the roller 69, more or less. In this instance the roller 70 is shown as being swung with the shaft 73, Figs. 22, 24, and 25, on hangers 74, and the said shaft rotated by mechanism shown in Fig. 9. Thus there is fixed upon said shaft 73 an arm 75, and connected with this arm is the rod 76, which extends down to a cam-lever 77 (shown in dotted lines at the bottom of Fig. 9) pivoted at 78. The rod or bar 76 is pivotally secured to the free end of this lever, and a cam 79 on a rotating shaft 21 serves to depress the said lever at the proper times, and thus by drawing the bar 76 down rotate the shaft 73 sufficiently to carry the roller 70 up into position, as seen in full lines, Fig. 22. When the cam 79 has passed into the position shown in Fig. 9 the spring 81 restores the roller 70 to the position seen in Fig. 25 and in dotted lines, Fig. 9. The movement of this roller to and from position to engage the bag of course is rapid, and engagement is always effected at the right time and after the blank has passed into the position substantially as shown in Fig. 22. The blank is then fed forward to be gripped by the gripping-fingers 71 and 72. There are two sets of these fingers in pairs, as seen in Fig. 24, and they are supported on a shaft 83, which has a sheave 84 operated through the stretched cord or cable 85. The said shaft and its fingers are adapted to both rotate and to be swung together back and forth from gripping to releasing position. To this end the shaft is supported upon the posts or uprights 85, Fig. 22, pivoted at their lower ends upon the shaft 86.

In order that the said transferring device may be operated as and for the purpose specified, I employ a crank-arm 87, Fig. 11, which is secured to the short shaft 88 and has gearing 89 in the chain or power gear and so arranged and constructed as to do this work at the proper time. This crank-arm 87 is fixed upon shaft 88 and operates in a slot in one of the arms 85. As this crank revolves it carries the frame, consisting of the standards 85 and the cross shaft or bar 83, from the position shown in Fig. 22, which is its receiving or gripping position, to the position shown in Fig. 25, which is its releasing position. As this occurs the said shaft 83 is rotated in the arms or standards 85 by and through the sheave 84 and the cable 85' around the same. In this action the fingers rotate around beneath the said shaft, and the action is such as to throw the wing *a* of the bag-bottom into the space between the pasting-roller 90 and the large roller 91 beneath, Fig. 25. Now, in order that the fingers 71 and 72 shall be in position and relation to both grip and release the blank it is necessary that they should close and open for that purpose. To this end I have provided the mechanism shown in Figs. 22, 24, 25, and 26. As already indicated, the standards 85 and shaft 83 at their top swing back and forth together from the rolls 69 and 70, where the gripping-fingers receive the blank, to the position substantially as shown in Fig. 25, where they release the blank to the rolls 90 and 91. In this operation the shaft 83 makes a half-way rotation within fixed limits, front and rear, by a crank-arm 92, Fig. 24, fast on its farther extremity and adapted to engage under the frame 93 and limit the rotation of the shaft, so that the gripping-fingers shall be in the right position, first, to receive the blank, and, secondly, to discharge it. This crank is held by a set-screw and is adjustable rotarily to fix the location of the gripping-fingers.

An additional and important element in connection with this transferring mechanism is the box 94 on the shaft 83 near the opposite end from the crank 93, and shown in elevation in Figs. 22 and 26. This box is adapted to slide lengthwise of itself upon the shaft 83, which is rectangular in cross-section at the box and is enlarged or deepened upon one side about half its length, as shown at 95, and a flat strip 96 lies longitudinally upon the shaft 83, as seen in end view in Fig. 22 and in plan in Fig. 8, across the fingers 72.

It will be noticed that the gripping-fingers 71 and 72 are hinged together at their connected ends and that the fingers 71 are rigidly fixed to the shaft 83 by screws, while the fingers 72 are adapted to open and have no connection with the shaft 83, except an indirect one. However, the flat strip or piece 96 lies across the finger 72 in line with the shaft 83, and thumb-screws and springs 97 pass through the said strip and through the fingers 72 into the shaft 83, and the springs tend normally to keep the fingers closed.

Referring now to Fig. 22, it will further be seen that a lever 98 is pivoted at about its middle on the inside of the near arm 85, and near the top of said arm, and is provided with a spring 99 on its lower end to keep it normally in a certain position. This lever is beneath the box 94 on shaft 83 and has its upper end projecting high enough to engage said box at certain times and for certain purposes, as will now be indicated. Thus suppose that the transferrer be in the position substantially as shown in Fig. 25. When this occurs, the lever 98 will bear against the extremity 100 of the bracket. (Shown centrally in Figs. 24 and 26.) Then as the crank 87, Fig. 25, makes a further rotation and carries the transferring device slightly farther backward the box 94 on shaft 83 will contact with the lever 98 and the flat cross-strip 96 will be forced to ride up on the enlargement 95 and thus open the fingers 72. Now, of course, the blank or bag is released and it passes through the rolls 90 and 91, in which flap *a* has been previously engaged. The gripping-fingers will remain in this open position as they are reversed to the gripping position, Fig. 22, and in coming back to this position they are inverted, as compared with Fig. 26; but in all other respects their relation and connection remains unchanged. When they come to this latter position, Fig. 22, and the bag-blank enters between them, it is desirable that the fingers should be closed immediately upon the blank, and this is accomplished by forcing the box 94 forward through the operations of the lever 98, bearing, in this instance, against the post or arm 102 at its bottom and carrying the flat strip 96 to the reduced surface 103 of the said box and thereby permitting fingers 72 to close under the pressure of the spring mechanism 97 bearing thereon. Then, having gripped the bag, the standards and their parts are carried back again by crank 87 to the discharge position in Fig. 25 and the action before described is repeated. After the bag has been received between the rolls 90 and 91 and the necessary paste is applied by the roll 91 from above the blank or bag *b* passes on through the creasing-roll 104, having two creasers 105 and 106. These crease the bottom across lines *c* and *d* at the point where the extremities of the diamond fold are folded back upon the bottom and pasted down, thereby making the bottom perfectly square, as clearly seen in Figs. 23 and 27. After passing through between the creasing-roll and the bottom roll 91 the blank is ready for the finishing work and naturally drops down behind the roll 91. As this occurs the flap *a* is engaged by the curved arm 107 and pressed against the said roll, so as to take the fold seen in Fig. 23. After the blank has passed sufficiently far to allow the second crease *c* to come behind the roll 91 the hook-shaped arm 112 on the shaft 113, and closely following after arm 107, comes in position to strike the blank above and behind the crease and causes

the upper flap *g* of the bag-bottom to be folded, as seen in Fig. 27. This completes the folding, and the bag then passes on between the endless carriers 109 and 110 and thence off to the drier on the endless apron 111, Fig. 25. The entire work from first to last is mechanical and automatic, and all the parts work in perfect harmony and successively as they are required.

Having thus described my invention, what I claim is—

1. The machine described, having a pair of central folding wings constructed to grip the edges of the bottom of the bag transversely, side folding wings to enter the side plaits of the blank, and mechanism to turn said central and side wings together into parallel planes, substantially as set forth.

2. The construction described, comprising a pair of plates arranged to grip the bag blank across the center of the diamond fold, at its back, a pair of central folding wings, constructed to grip the edge of the blank and opposite pairs of side folding wings to fold the side edges of the blank, substantially as set forth.

3. The folding mechanism described, consisting of a pair of opposite pinching plates arranged to momentarily grip the blank while the bottom thereof is being folded, the central folding wings constructed to grip the edge of the blank, and the side folding wings, and mechanism connected with said wings to turn them together from the initial position to a parallel vertical plane, and thereby produce the "diamond fold" of the blank, substantially as set forth.

4. The folding mechanism consisting of the central folding wings, folding wings at each side of the central wings arranged to enter the sides of the blank and to turn and spread the same, a pair of pinching guide plates for the blank adapted to be moved in respect to each other and to the central wings and a sliding frame carrying said central and side wings, substantially as set forth.

5. In a paper bag machine, a pair of pinching guide plates before the folding wings and separate shafts supporting said plates and one of said plates constructed and arranged to move longitudinally in respect to the other, and the central and side folding wings substantially as set forth.

6. The pinching guide plates and separate shafts on which said plates are supported, mechanism to rotate said shafts, and mechanism to slide one of said plates back and forth in respect to the other, substantially as set forth.

7. The mechanism described, consisting of a sliding carrier frame, a pair of central folding wings and a pair of side folding wings on each side of the central wings supported upon said frame, and mechanism upon said frame to rotate said wings and fold the end of the bag blank, substantially as set forth.

8. The machine having a horizontally sliding carrier frame, central and side folding wings supported on said frame, and mechanism connecting each of said side wings and one of the central wings rigidly together for rotation one with the other and sliding shafts supporting said mechanism, substantially as set forth.

9. In a paper bag folding machine, a sliding carrier frame, central and side folding wings supported upon said frame, a horizontal arm upon each side of said frame pivoted on the main frame and slotted at its end, and mechanism engaged in said slot to carry the side folding wings inward and outward in respect to the central wings, substantially as set forth.

10. The sliding carrier frame, the central and side wings supported thereon, separate shafts upon opposite sides of said frame extending toward each other, side folders supported upon the ends of said shafts, and a horizontal lever on each side of the machine having a slot in its end engaging a projection on the corresponding shaft, substantially as set forth.

11. The side wings and the central wings for folding the bottom of the bag, the sliding carrier frame supporting said wings, a longitudinally sliding shaft on each side of said frame and carrying the said wings, a horizontally pivoted lever on each side of the machine in one end of which one of said sliding shafts engages, and mechanism at the opposite end of said lever to move the same at intervals, whereby as said levers are moved the shafts carrying the folding wings are moved, substantially as set forth.

12. The main frame, the sliding carrier frame thereon, and the central and side folding wings upon said carrier frame, in combination with horizontally arranged arms upon the sides of the machine constructed to connect with and operate the said folding wings, and mechanism to move said sliding carriage back and forth, substantially as set forth.

13. The main frame, the movable carriage thereon, and the folding wings carried by said carriage, said folding wings having connected therewith sliding shafts on each side of the machine, horizontally arranged arms to actuate said shafts, mechanism to operate said arms, and mechanism to move said carriage back and forth, substantially as set forth.

14. The main frame and the movable carrier frame, a pair of shafts extending each transversely of the machine and having folding wings operated from their inner ends, in combination with said wings and with horizontally arranged actuating levers having slots at their ends through which said shafts are engaged, substantially as set forth.

15. The mechanism herein described for operating the middle and side folding wings consisting of a sliding frame, a pair of shafts supported upon said frame transversely thereto, the folding wings and mechanism supporting said wings upon said shafts, pulleys on said shafts and cables to turn the same, and

a horizontally arranged lever upon each side of the machine and having a slot at one end through which the shaft upon that side of the machine is engaged, whereby the said shafts are rotated and moved inward and outward at the same time, substantially as set forth.

16. The mechanism described, consisting of a shaft, gripping fingers supported upon said shaft, and a pulley and cord for rotating said shaft, pivoted supports carrying said shaft, and a crank to actuate said supports and carry them back and forth, whereby the bag blank is received by the gripping fingers at one extremity of its throw, and is delivered to the carrying rolls at the other extremity of its throw, substantially as set forth.

17. In a machine as described, the shaft carrying the gripping fingers, and gripping fingers upon said shaft constructed to open and close, and mechanism connected with said shaft and said fingers comprising a sliding box supported on said shaft and means to bear against said box, substantially as set forth.

18. The machine having a transferring device, consisting of a series of fingers, hinged together and a shaft supporting said fingers having one of each set fixed rigidly thereto and a pivoted frame carrying said shafts, and mechanism to open and close said fingers at the extremities of the throw of the said device to one position and the other, in combination with a rotating shaft having a crank working in said pivoted frame, whereby said frame is moved back and forth, substantially as set forth.

19. The mechanism described, consisting of the carrying roll, the pasting roll and the creasing roll above said carrying roll and bearing thereon, and a device constructed to fold the blank and bear it against the carrying roll, said device constructed to engage the opposite flaps of the blank successively, substantially as set forth.

20. The mechanism described for completing the folding of the blank, the creasing roll and the carrying-roll, and rotating members constructed to fold the flaps of the blank successively and to bear the said flaps against the said carrying roll and complete the bag, substantially as set forth.

Witness my hand to the foregoing specification this 18th day of May, 1894.

SIMON E. PETTEE.

Witnesses:
H. T. FISHER,
GEORGIA SCHAEFFER.

POOR COPY

(No Model.) 8 Sheets—Sheet 1.

C. CRIST.

PAPER BAG MACHINE.

No. 543,571. Patented July 30, 1895.

Fig. 1.

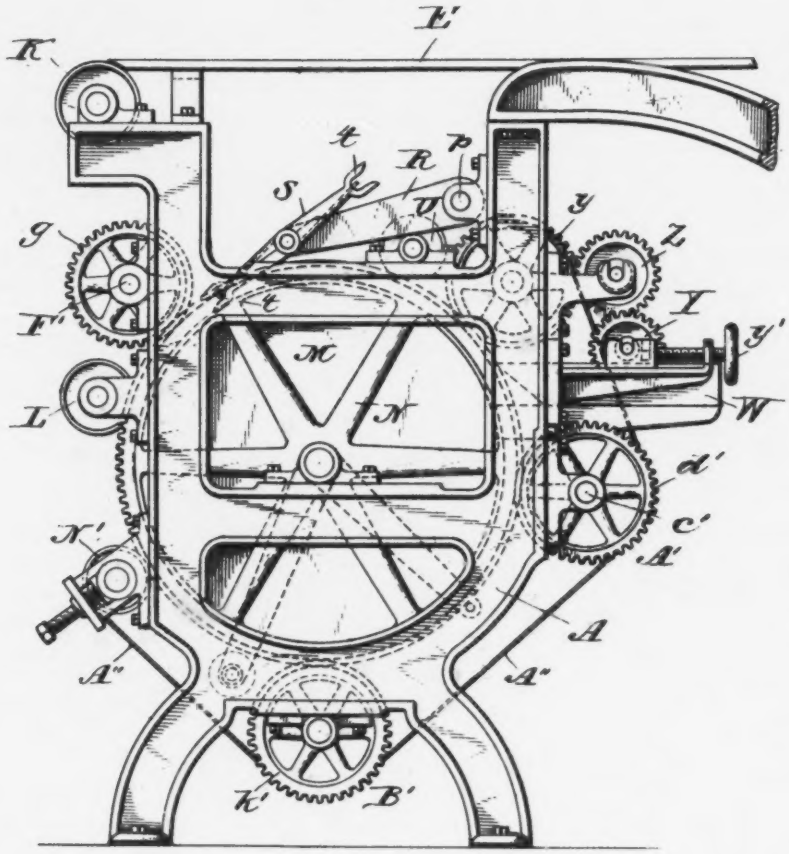

Witnesses.

J. Thomson Cross

George Heidman.

Inventor

Charles Crist

by Stern & Allen

Attorneys.

(No Model.) 8 Sheets—Sheet 2.

C. CRIST.

PAPER BAG MACHINE.

No. 543,571. Patented July 30, 1895.

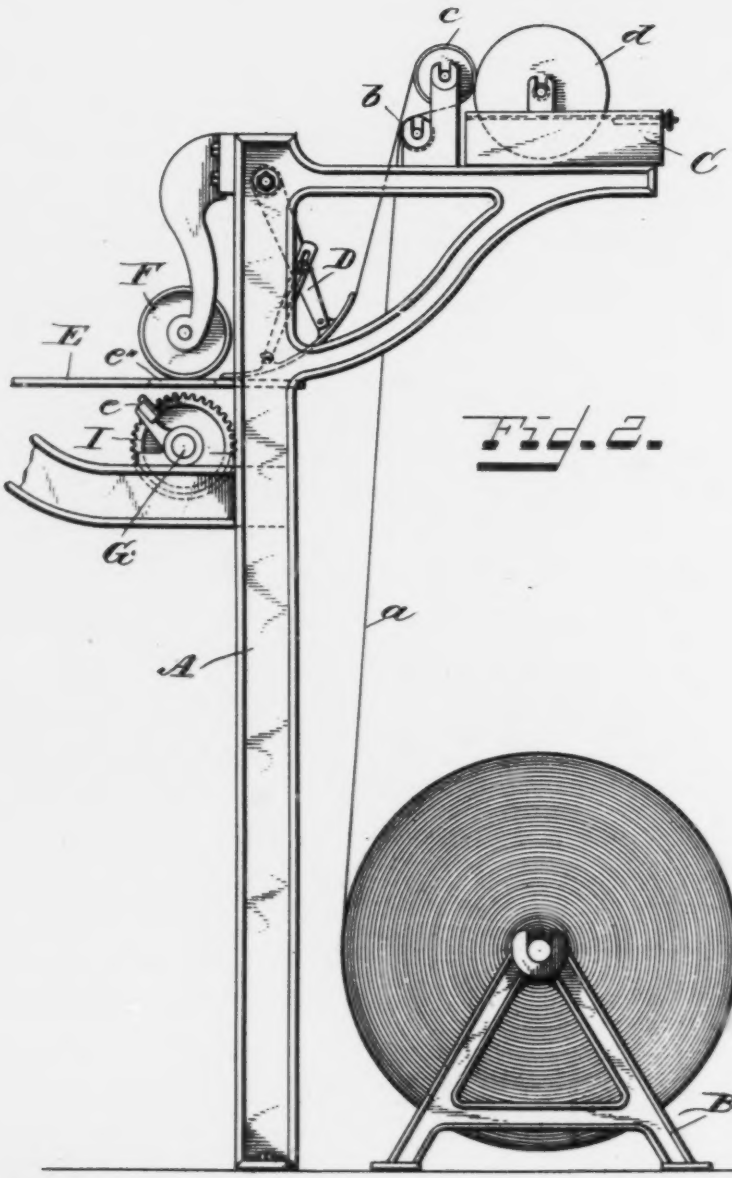

Fig. 2.

Witnesses.
J. Thomson Cross
George H. Heidman

Inventor
Charles Crist
by Stews & Allen
Attorneys.

(No Model.) 3 Sheets—Sheet 3.

C. CRIST.

PAPER BAG MACHINE.

No. 543,571. Patented July 30, 1895.

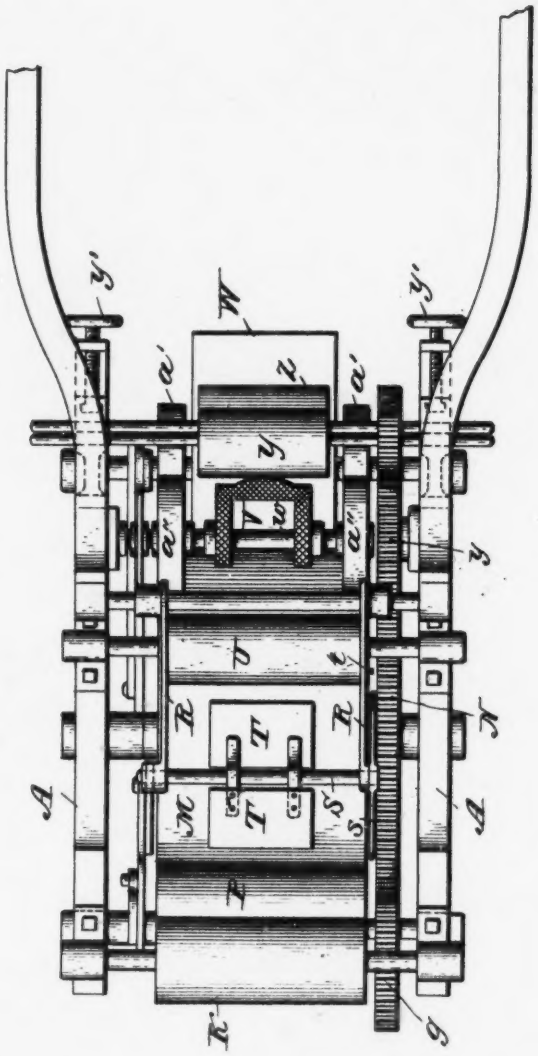

Fig. 3.

Witnesses.
J. Thomas Cross
George H. Heidman.

Inventor.
Charles Crist
by Steen & Allen
Attorneys.

(No Model.) 8 Sheets—Sheet 4.

C. CRIST.

PAPER BAG MACHINE.

No. 543,571. Patented July 30, 1895.

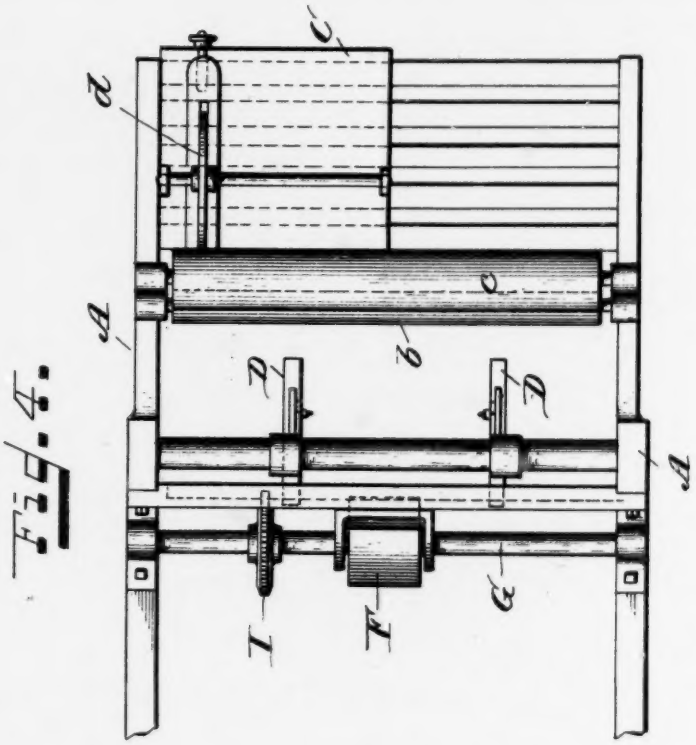

Fig. 14.

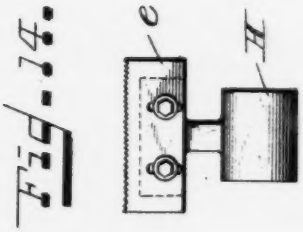

Fig. 16.

Fig. 15.

Witnesses.
J. Thomas Cross
Geo. H. Heidman,

Inventor.
Charles Crist
by Stein & Allen
Attorneys.

(No Model.) 8 Sheets—Sheet 5.

C. CRIST.

PAPER BAG MACHINE.

No. 543,571. Patented July 30, 1895.

Fig. 5.

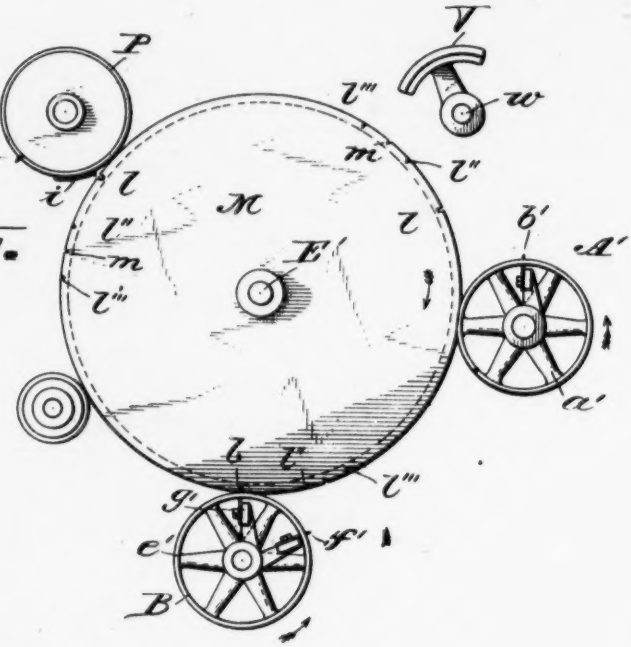

Fig. 19.

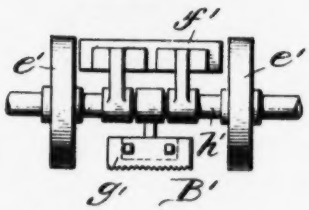

Fig. 18.

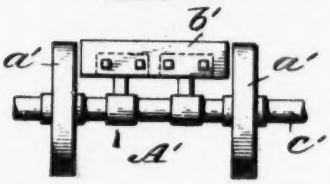

Witnesses.

J. Thomson Cross

George Heidman,

Inventor:

Charles Crist

by Steur & Allen

Attorneys.

(No Model) 8 Sheets—Sheet 6.

C. CRIST.

PAPER BAG MACHINE.

No. 543,571. Patented July 30, 1895.

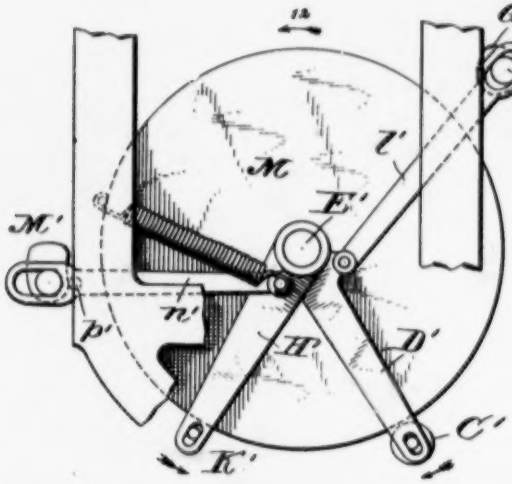

Fig. 6.

Fig. 20.

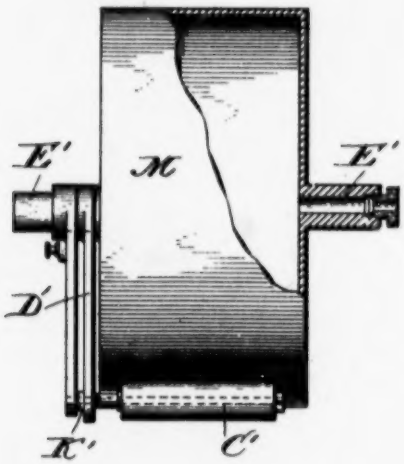

Fig. 16.

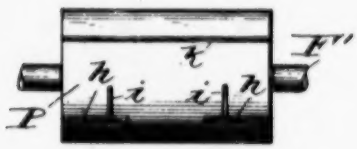

Fig. 17.

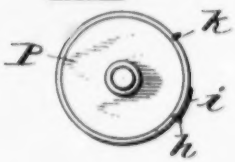

Witnesses.
J. Thomson Cross
George Hidman.

Inventor.
Charles Crist
by Stein & Allen
Attorneys.

(No Model.) 8 Sheets—Sheet 7.

C. CRIST.

PAPER BAG MACHINE.

No. 543,571. Patented July 30, 1895.

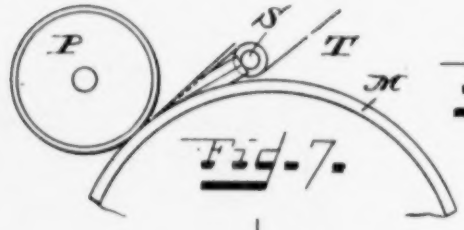

Fig. 7.

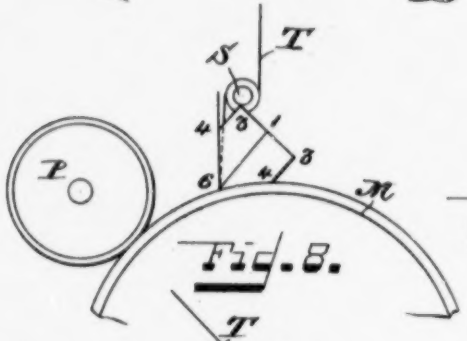

Fig. 8.

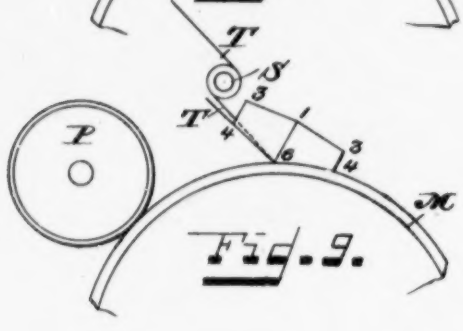

Fig. 9.

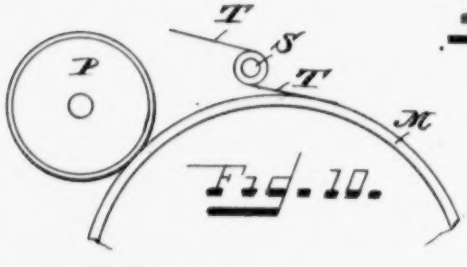

Fig. 10.

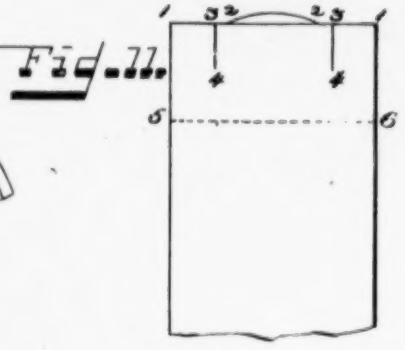

Fig. 11.

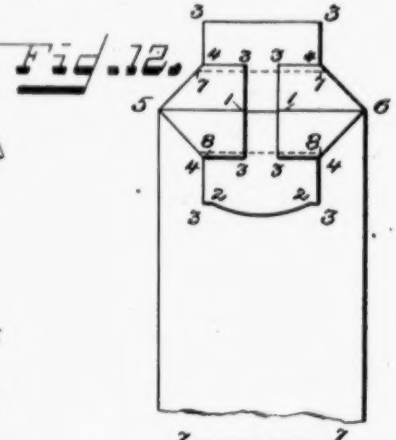

Fig. 12.

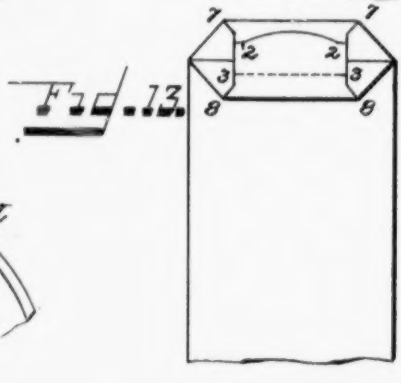

Fig. 13.

Witnesses.
J. Thomson Cross.
George Hildman.

Inventor.
Charles Crist
by Steen & Allen
Attorneys

(No Model.) 8 Sheets—Sheet 8.

C. CRIST.

PAPER BAG MACHINE.

No. 543,571. Patented July 30, 1895.

Fig. 21.

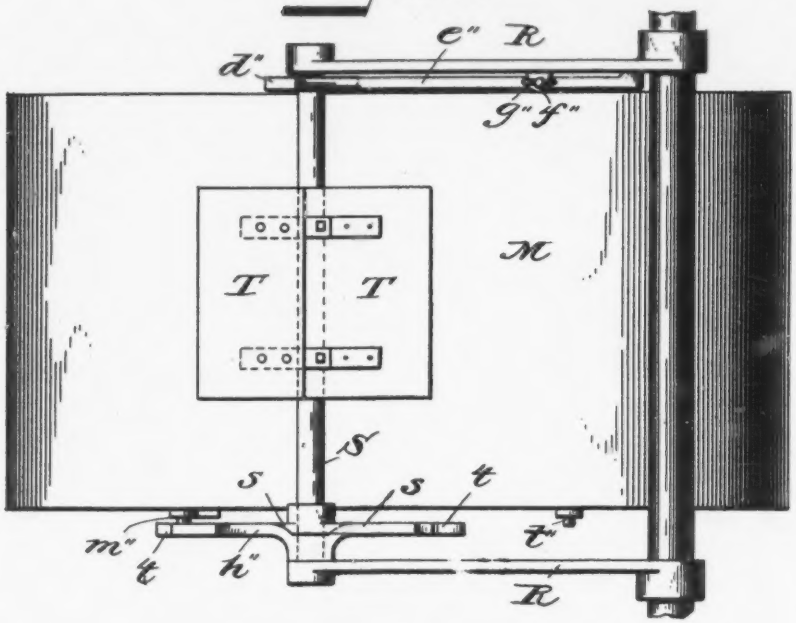

Fig. 22.

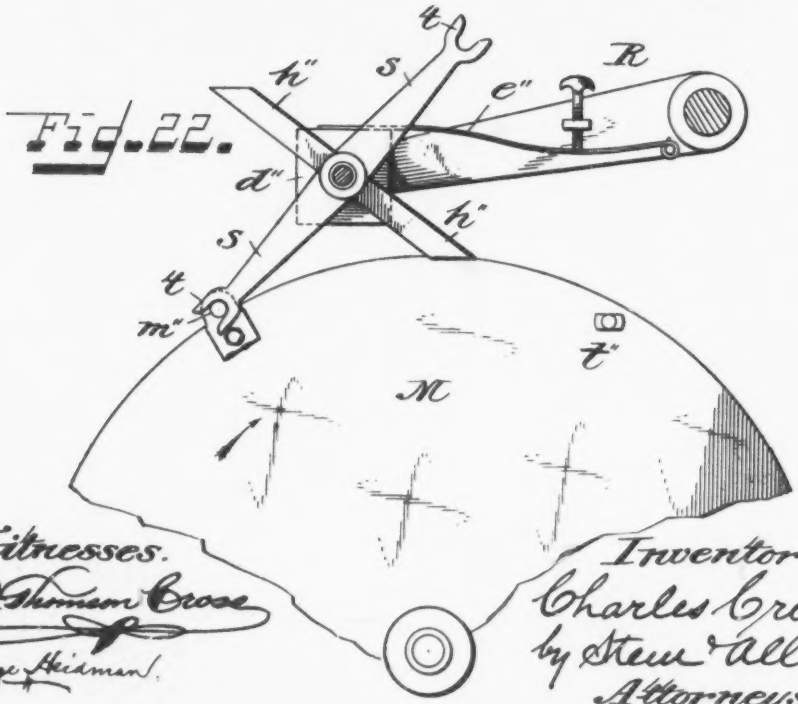

Witnesses.
J. Thomson Crosse
George Heidman.

Inventor
Charles Crist
by Steen & Allen
Attorneys.

UNITED STATES PATENT OFFICE.

CHARLES CRIST, OF DAYTON, OHIO, ASSIGNOR TO THE CRIST MACHINE COMPANY, OF SAME PLACE.

PAPER-BAG MACHINE.

SPECIFICATION forming part of Letters Patent No. 543,571, dated July 30, 1895.

Application filed August 18, 1893. Serial No. 483,435. (No model.)

To all whom it may concern:

Be it known that I, CHARLES CRIST, a citizen of the United States, residing at Dayton, in the county of Montgomery and State of Ohio, have invented certain new and useful Improvements in Paper-Bag Machines, of which the following is a full, clear, and exact description, reference being had to the accompanying drawings, forming part of this specification.

My improvements relate to machines for making satchel-bottom or square-bottom bags, and they consist of certain novel and useful combinations of parts to be hereinafter more particularly pointed out and claimed.

The various operations necessary in the formation of square-bottom paper bags are substantially as follows: The paper is delivered to the machine from a roll and formed into an endless paper tube, which is then delivered to the machine proper. The necessary slits to form the bottom of the bag are then cut and the first crease therefor is made. These creases that are first cut do not entirely sever the paper tube, and until the final operation is performed the bags in process of manufacture form a continuous connected series. After the first slits and creases are formed it is necessary to open out what is to be the bottom of the bag and to fold back the upper end of the paper tube.

Heretofore the portion to be opened out and folded back has been picked up by pins on the first creasing-roller, and to flatten out this portion the blank is then passed between pressure-rollers. It often happens that the pins on the creaser-roller fail to pick up the fold properly, and the blank in passing between the pressure-rollers is not folded at the right point.

One part of my improvements relates to means for insuring the proper fold in the blank, and consists of what I have called a "former"—a flat sheet of metal arranged to enter the blank and to positively fold back the proper portion thereof. After passing the pressure-roll, paste is then applied to the blank at proper points. The blank is then creased to form the two folds for the bottom of the bag. Two folding-arms at proper intervals then turn under the folds, leaving the broadest fold on the outside. The finished bag is then cut off from the endless tube, passed between a final pressure-roller, and the pasted parts firmly pressed together. Ordinarily after this operation the bags are placed in driers and the pasted portions properly dried.

In my machine the bags are formed around a central cylinder and another element of novelty consists in forming this cylinder so that it may be filled with steam and the cylinder itself will become a drier for the bags.

There are various other novel features in my machine, which will be hereinafter more particularly pointed out, and set forth in the claims.

In the drawings, Figure 1 is a side elevation of the main portion of the machine. Fig. 2 is a side elevation of the supply-roll of paper and the tube-forming mechanism. Fig. 3 is a top plan view of the machine, as shown in Fig. 1; Fig. 4, a top plan view of the portion of the machine shown in Fig. 2; Fig. 5, a side view of the main cylinder, showing the positions of the various creasing, cutting, and paste rollers. Fig. 6 is a rear side view of the main cylinder, showing the folders for the bag-bottom. Figs. 7, 8, 9, and 10 are diagrammatic views showing the paper blank and former in their various positions during the passage of the blank. Figs. 11, 12, and 13 are diagrammatic views of the paper blank, illustrating the manner in which the bottom of the bag is formed. Fig. 14 is a top plan view of the knife which cuts the lip in the blank. Fig. 15 is a front view of same. Fig. 16 is a front view of the first cutting and creasing roller. Fig. 17 is a side view of same. Fig. 18 is a top plan view of the creasing-roller, which forms the first bottom-fold. Fig. 19 is a top plan view of the creasing-roller and cutter, which forms the second bottom-fold and cuts the bag from the blank. Fig. 20 is a front view, partly in section, of the main cylinder, as shown in Fig. 6. Fig. 21 is a top plan view of the former-plate and its operating mechanism. Fig. 22 is a side view of same.

The machine is supported in suitable frame-work A A. The paper *a*, from which the blanks are cut, is supplied to the machine

from the roll journaled on the standards B. Journaled in suitable standards in one end of the framework are the rollers *b c* and a narrow paste roller or wheel *d*, which dips within a paste box C. The paper is passed around these rolls *b c*, where one edge is covered with paste by the wheel *d*, and underneath the curved plate D onto the table E. Underneath the table E, journaled in the framework is a shaft G, which has mounted on it the hub H, carrying a curved serrated cutting-knife *e*. This shaft is driven by the sprocket-wheel I mounted thereon in connection with the driving mechanism of the machine. The purpose of this cutter *e* is to cut the lip *f*, Fig. 11, at proper distances in the tube blank, the shaft G being rotated at such a rate of speed that for each bag-length one of these lips will be cut. An opening *e''* is formed in the table through which the lip-cutter *e* works, acting against the rubber roller F'. The two arms or fingers for turning over the edges of the paper web to form the tube-blank I have not shown, as there is nothing novel in this portion of the machine and the above description will probably be sufficient.

The tube blank when formed passes along the table E, over the roller K, down around the roller L, and up onto the main cylinder M, these rollers L and K being journaled from side to side in the framework. The bags cut and formed from this endless tube blank are all formed around the main cylinder M, the different operations being performed at different portions of this cylinder and the size of the cylinder being such that three paper bags are in process of manufacture at the same time. This cylinder is hollow, as shown in Fig. 20, and steam is introduced through its journals, which are also hollow, so that the cylinder is at all times kept at such a temperature that the bags may be properly dried thereon in the process of manufacture. This cylinder M is driven by suitable pulleys, mounted on the cylinder-shaft in any of the well-known ways. Mounted on the cylinder-shaft is a large gear-wheel N, which turns with the cylinder and drives the various creasing and cutting-rollers. After the paper blank is fed around the roller L it passes up on the cylinder M under the roller P, Figs. 5, 16, and 17, this roller being driven by the gearing *g*, which meshes with the gear N. Secured on the face of this roller P are cutting-knives *h i* and the creasing-bar *k*, grooves *l m* being formed on the face of the main cylinder to receive the knives and creaser. The slits cut by this first set of knives are shown in Fig. 11, 1 2 3 4 being the slits and 5 6 the crease. The paper blank still being held to the cylinder by the portion of the blank ahead of it, the crease tends to throw open the cut part of the blank.

Mounted on arms R R, pivoted to the frame at *p*, is a shaft or rod S, secured to which and extending out in opposite directions are the plates T T, of just sufficient breadth to enter the paper blank between the slits cut by the knives *i i*. On one end of this shaft S is a double forked arm *s*, having the forks *t t* at each end thereof. On the other end of this shaft a square plate *d''* is secured, upon which square plate a spring *e''* bears to keep the shaft *s* and the former-plate in a fixed-position while at rest. This spring *e''* is secured to the arm R, and a set-screw *g''*, passing through the lug *f'''* on the arm R, bears against this spring, so that its tension can be regulated. On the same end of the shaft S as the forked arm *s*, is secured a double-arm *h''*, substantially at right angles to the arm *s* and preferably beveled at the ends.

Upon the main cylinder M pins *m''* are secured just beyond the periphery of the cylinder. As my machine is arranged to make three bags at a time three of these pins are used, arranged at equal distances apart. Intermediate these three pins *m''* are three other pins *l''* secured to the side of the main cylinder. The parts are so arranged that the downwardly-extending plate T enters the opening in the paper blank and at the same moment the pin *m''* engages with the fork *t*. The revolution of the cylinder M raises the former, the arms R rocking on their journal-bearing, and the former is raised and turned into the successive positions indicated in Figs. 7, 8, 9, and 10.

The parts are so proportioned and arranged that the former will begin to rise at the moment the edge of the plate T reaches the crease 5 6 in the paper blank, and the action will be to open out and fold back the portion of the blank that has been cut by the knives *h i*. When the former reaches the position shown in Fig. 10 the arm *h''* will then be pointing downward, and its beveled end will be engaged by the pin *t''*, and the other end of the former will at once be brought down into the position shown in Fig. 7, where it is ready to enter the next bag.

The opening out of the cut portion of the blank and folding back of same draws the paper into the shape shown in diagram in Fig. 12, in which the cut lines are marked with figures to correspond with the figures in Fig. 11.

The square portion of the blank marked by the lines 3 3 in Fig. 12 it will be understood have not yet been cut, and the blank is still attached to the blank ahead of it on this line 3 3.

U is a pressure-roller journaled in the framework, and between this roller and the main cylinder the blank is passed and the folded back portion pressed out, as shown in Fig. 12.

The next operation is to apply the paste to the paper portions of the bottom of the blank. This is done by the paste-wheel V, mounted on shaft *w*, upon which the gear-wheel *y* is secured, which meshes with the large gear N and is driven thereby. This paste-wheel V is segmental in side elevation, as shown in Fig. 5, and is of the shape shown in Fig. 3, so

that the paste will be applied across the lip along the lines indicated by numbers 2 2 in Fig. 12 and across the bottom of the bag as far as the outer rectangular flap of the bottom. This paste-wheel gets its paste from the paste-box W, within which the geared roller Y dips, while Z is an intermediate roller, so that the paste may be properly distributed on the paste-roller V.

$y' y'$ are set-screws, by means of which the roller Y is adjusted in the paste-box, as will be readily understood. The shaft w is also provided with pulleys $a'' a''$, over which belts are run, as hereinafter described.

The next operation is to crease one of the bottom folds. This is done by the creaser A'. (Shown in Fig. 18.) This creaser is made up of the two pulleys $a' a'$ and the creasing-knife b' mounted on the shaft c', upon which the gear-wheel d' is secured, which meshes with and is driven by the large gear N, the parts being so arranged that the creasing-knife b' will take within the groove l'' in the main cylinder M, and the crease formed in the blank is indicated by the dotted lines shown in Fig. 12, (marked 7 7.)

The next operation consists in cutting the blank from the bag ahead of it in forming the crease for the inner fold of the bottom and in folding both folds down into the position shown in the diagram, Fig. 13, where the paste that has been applied by the paste-wheel V will secure the parts together. The creasing and severing of the blank from the bag ahead of it is done by the creaser and cutter B'. (Shown in Fig. 19.) This creaser and cutter is made up of the pulleys $e' e'$, the creaser f', and cutting-knife g', all mounted on the shaft h', upon which the gear-wheel k' is secured, meshing with the large gear N. The blank is severed by the cutter g' along the line 3 3 in Fig. 12, and the creasing-knife f' forms the crease shown by the dotted lines 8 8 in Fig. 12. The creases 7 7 and 8 8 cause the bottom folds or flaps to rise up slightly away from the face of the blank, and they are then folded down by the folders. The folder for the undermost flap consists of a roller C' extending over the cylinder M secured to an arm D', which is mounted on the main cylinder-shaft E'. This arm D' is connected with the shaft F' of the first creaser P by the connecting-link l'. Mounted on the creaser-shaft F' is a cam G', which engages with a small roller m' on the connecting-link l', the connecting-link l' being slotted, as shown, so as to straddle the shaft F'.

The roller m' bears continuously against the face of the cam G', and the cam is of such a shape that the roller-folder is moved forward in the direction of the arrow 12 for a certain distance, then back to a certain point at the same rate of speed as the cylinder M is revolving, so that the roller moves with the cylinder. Then the movement of the roller-folder is stopped altogether to allow the bag-blank carried on the main cylinder to pass under it, and then the roller-folder is returned to its normal position to begin its work on the next blank. The weight of the roller is ordinarily sufficient to keep the roller m' at all times in contact with the cam, but if desired a coiled spring can be attached to the arm D' and connected with the framework to insure this contact.

H' is another arm mounted on the shaft E', and carrying the folding-rod K', which folding-arm folds down the uppermost flap or the one with the lip. This arm H' is connected with the shaft c' of the creaser A' by the connecting-link n'. Upon this creaser-shaft the cam M' is mounted, which cam engages with the small roller e' on the connecting-link n', the connecting-link n' being slotted to straddle the shaft c', as in the other folder. The cam M' is of such a shape that with each revolution of the creaser-shaft c' the folding-arm K' is given a rapid forward movement. It is then held in that position for about a quarter of a revolution of the creaser and is then returned to its normal position. The results of these irregular movements given by the cams to the folders are that immediately after the bag has been severed from the blank the roller-folder C turns over and folds down the undermost or straight flap. This folder then moves with the cylinder, while the arm-folder K' advances rapidly and folds down the uppermost or lip flap. This arm-folder then retreats, the roller-folder stops altogether, and the bag carried by the main cylinder passes under the roller, when the folded parts are pressed together. The bag is then fed under the final pressure-roller N', which bears against the main cylinder, and the pasted parts are firmly secured together and the bag is delivered complete from the machine.

In order to keep the bag-blanks at all times pressed firmly against the main cylinder each of the shafts w c' h' is provided with a pair of pulleys $a'' a''$, $a' a'$, and $e' e'$, around which pulleys a pair of endless belts A'' are run, the belts also being carried over similar pulleys on the final pressure-roller N'. In this way the belts are continuously pressing against the main cylinder and the bag-blanks are at all times held and fed along with the cylinder thereby.

Having thus described my invention, what I claim, and desire to secure by Letters Patent, is—

1. In a paper bag machine the combination with the main rotary cylinder around which the bag is formed, of a rotating and oscillating former plate arranged to enter the cut lip portion of the blank, with cooperating mechanism in connection with said cylinder and said plate to rotate and oscillate same to open out the blank at the proper fold, substantially as shown and described.

2. In a paper bag machine, the combination, with the main rotary cylinder, of a shaft journaled in an oscillating frame, former plates secured to said shaft, and extending out in

opposite directions, forked arms therefor, and pins on the main cylinder to engage within said forks and thus to rotate and oscillate said former substantially as shown and described.

3. In a paper bag machine, the combination, with the main rotary cylinder, of a shaft journaled in an oscillating frame, former plates secured to said shaft, and extending out in opposite directions, two pairs of arms therefor, nearly at right angles to each other with pins on the main cylinder to engage with said arms alternately whereoy the former may be rotated oscillated and returned to its original position substantially as shown and described.

4. In a paper bag machine, the combination, with cutting, creasing, and folding mechanism therefor, of a hollow main cylinder around which the bags are formed with hollow trunnions therefor within which steam may be introduced into the cylinder substantially as shown and described.

5. In a paper bag machine the combination with the main rotary cylinder, of a roller folder for the inner and an arm folder for the outer flap of the bag bottom, and means for operating said folders in opposite directions upon said main cylinder in conjunction with each other, whereby the roller folder may turn down the inner flap and the arm folder the outer flap and the folded bag blank be thereupon carried by the cylinder under the roller folder, substantially as shown and described.

6. In a paper bag machine the combination with the main rotary cylinder, of a roller folder for the inner and an arm folder for the outer flap of the bag bottom, and cams for operating said folders in opposite directions upon said main cylinder whereby the roller folder may turn down the inner flap and the arm folder the outer flap and the folded bag blank be thereupon carried by the cylinder under the roller folder, substantially as shown and described.

7. In a paper bag machine the combination with the main rotary cylinder and creasers for the bottom folds, of a roller folder for the inner and an arm folder for the outer flap of the bag bottom, cams on the creaser shafts in connection with said folders whereby the rotation of the shafts will operate said folders in opposite directions upon said main cylinder to fold down the bottom flaps, substantially as shown and described.

CHARLES CRIST.

Witnesses:
CLARENCE THORNE,
SIDNEY ECKLEY.

(No Model.) 3 Sheets—Sheet 1.

W. LIDDELL.

PAPER BAG MACHINE.

No. 558,969. Patented Apr. 28, 1896.

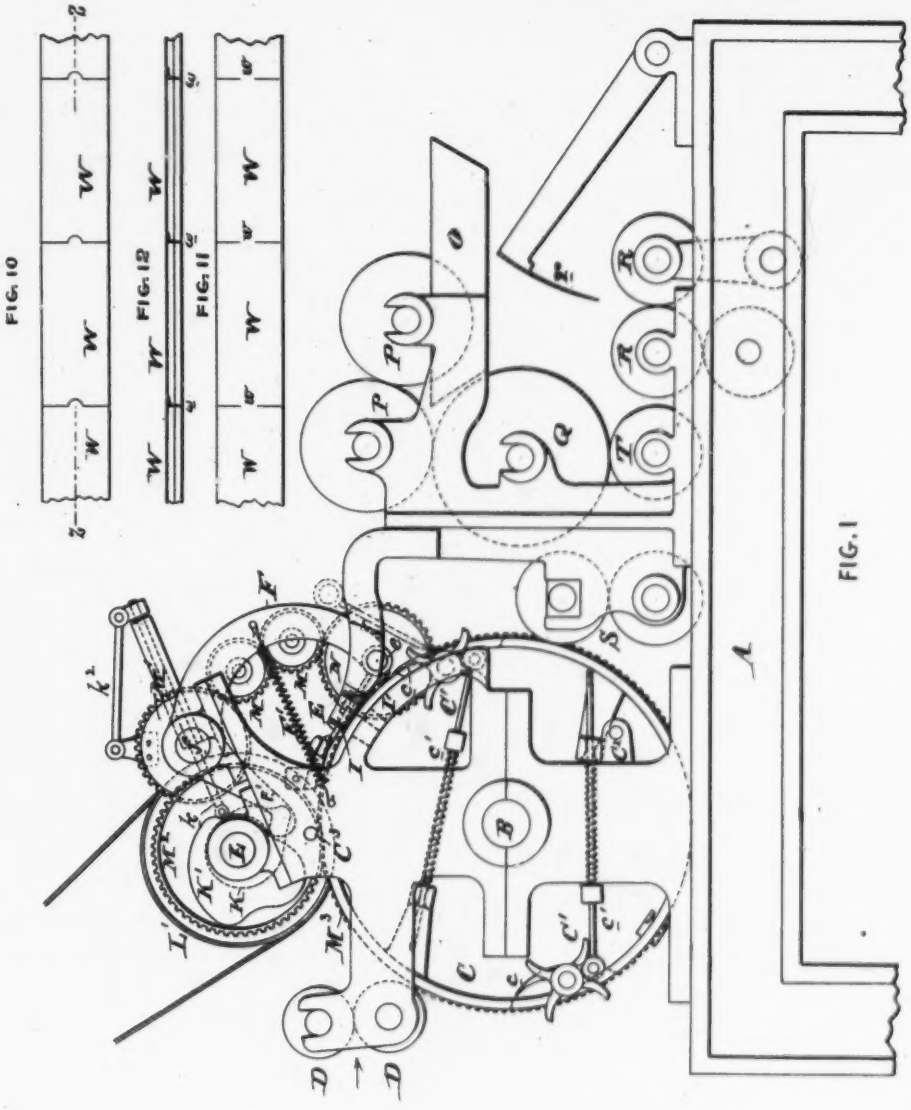

Witnesses.

Henry Drury

Wm. L. Evans

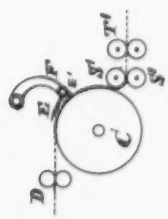

Inventor.

William Liddell

By [signature]

Attorney.

(No Model.) 3 Sheets—Sheet 2.

W. LIDDELL.

PAPER BAG MACHINE.

No. 558,969. Patented Apr. 28, 1896.

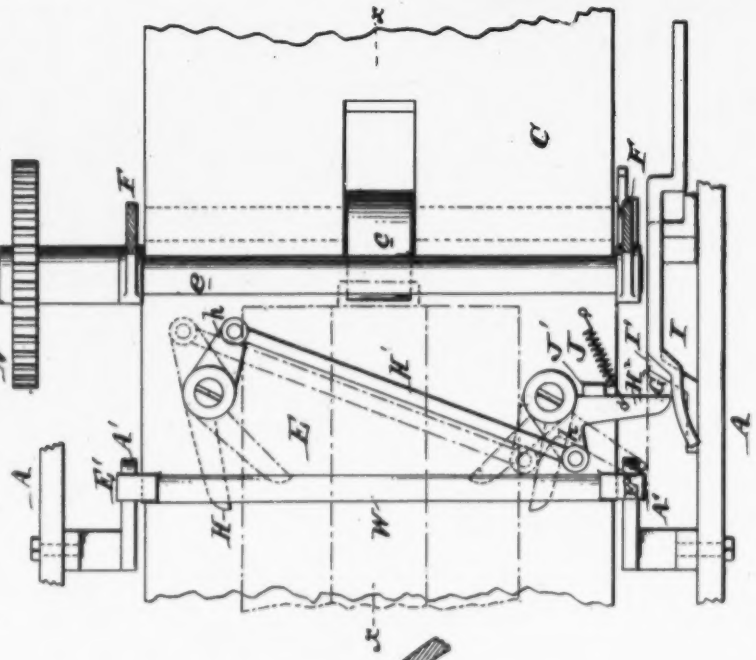

FIG. 2

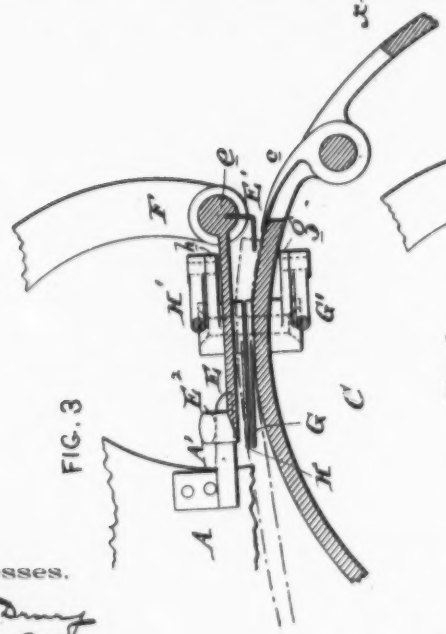

FIG. 3

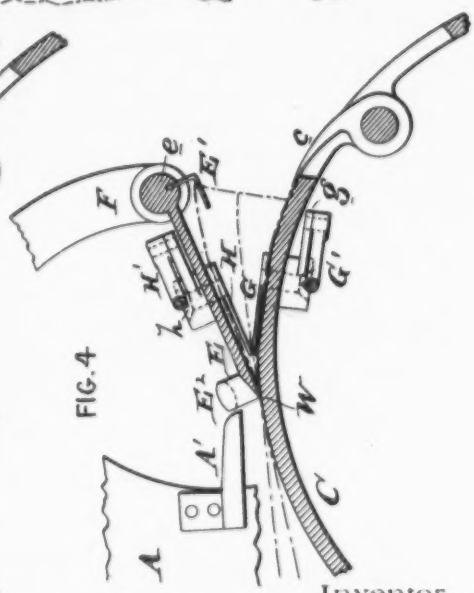

FIG. 4

Witnesses.

Henry Drury

Wm. L. Evans

Inventor.

William Liddell

By [illegible]

Attorney

(No Model.) 3 Sheets—Sheet 3.

W. LIDDELL.

PAPER BAG MACHINE.

No. 558,969. Patented Apr. 28, 1896.

FIG. 5

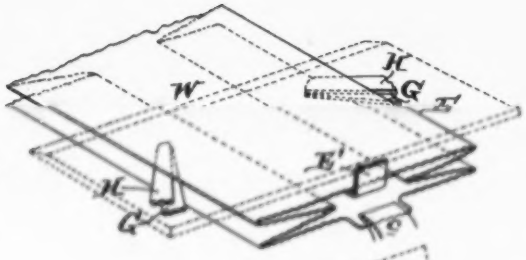

FIG. 6

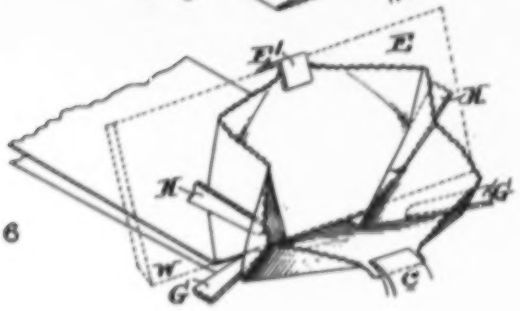

FIG. 7.

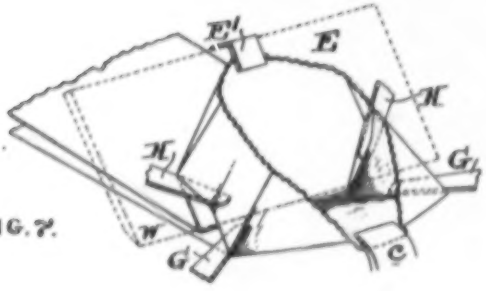

FIG. 8

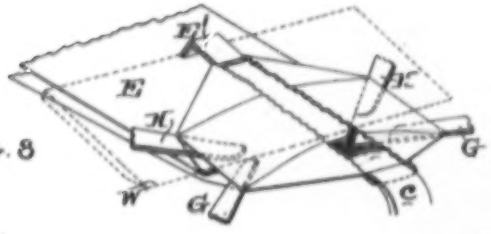

Witnesses.

Henry Denny

Wm. L. Evans

Inventor.

William Liddell

By [signature]

Attorney.

UNITED STATES PATENT OFFICE.

WILLIAM LIDDELL, OF BROOKLYN, NEW YORK, ASSIGNOR TO THE EASTERN PAPER BAG COMPANY, OF CONNECTICUT.

PAPER-BAG MACHINE.

SPECIFICATION forming part of Letters Patent No. 558,969, dated April 28, 1896.

Application filed February 6, 1896. Serial No. 578,291. (No model.)

To all whom it may concern:

Be it known that I, WILLIAM LIDDELL, of the city of Brooklyn, county of Kings, State of New York, have invented an Improvement in Paper-Bag Machines, of which the following is a specification.

My invention has reference to paper-bag machines; and it consists of certain improvements which are fully described in the following specification and are shown in the accompanying drawings, which form a part thereof.

This application comprehends certain mechanism for forming a satchel bottom upon the tube in the manufacture of paper bags, and has for its object the production of a perfectly-formed satchel-bottom bag in a speedy and accurate manner. My improvements, briefly stated, may be described as follows: The tube is received upon a revolving cylinder and carried forward by a nipper, which clamps the lower sheet of the tube, or by other means hereinafter described. The upper sheet of the tube passes above a finger upon a movable forming-plate securely held at a short distance from the revolving cylinder and between which and the cylinder the tube is guided. The forming-plate is then caused to rotate about its rear edge simultaneously with its movement or travel with the revolving cylinder, thereby opening the end of the tube, spreading the side folds, and marking a creased line transversely. Simultaneously with this forming-fingers are projected into the side folds, one pair being adapted to the cylinder and the other pair to the forming-plate. A continued movement of the parts causes the upper layer or sheet of the tube to be completely turned backward upon itself, and at the same time the forming-fingers together with the other parts insure the proper formation of the diamond fold. The tube in this shape leaves the revolving cylinder, passes to the pasting devices, and thence to the folder.

The invention will be better understood by reference to the accompanying drawings, in which—

Figure 1 is a side elevation of a paper-bag machine embodying my improvements. Fig. 2 is a plan view of a portion of the same. Figs. 3 and 4 are sectional elevations on the line *x x* of Fig. 2, showing the operations of the parts in the formation of the bottom. Figs. 5, 6, 7, and 8 are perspective views illustrating the several manipulations which take place upon the bag-tube in its formation under the action of the nipper and the forming-fingers. Fig. 9 is a diagram illustrating the employment of a continuous or connected series of tubes to insure their being fed with the cylinder and obviating the necessity of nippers. Fig. 10 is a plan view of the paper tube employed in connection with Fig. 9. Fig. 11 is an inverted plan view of same, and Fig. 12 is a longitudinal section of the tube on line *z z*.

A is the main frame of the machine.

B is a shaft carried upon the main frame and upon which is supported the forming-cylinder C, which may be provided with one or more nippers *c*, adapted to be closed and held closed by the action of the spring *c'*, and opened by the action of a pin C^3, acting upon the star-wheel C'. The nipper is also controlled as to its being closed by the action of the pin C^3, also acting upon the star-wheel. These devices operate to enable the nipper to close upon the forward edge of the under layer of the bag-tube, and after the formation or creasing of the bottom into the diamond folds to release the bag-tube.

D D are two feed or guide rollers adapted to properly deliver the bag to the cylinder C.

E is a forming-plate and is hinged at *e* to the arm F, journaled to the main frame at *f*. This arm F is drawn toward the cylinder C by a spring F', and is moved away from the cylinder about the axis *f* by cam K' and arm F''.

L is a rotating power-shaft carrying cam and is driven by a belt-pulley L' and operates the cylinder C by gears M^2 M^3. Spur-gears M' M N operate the axis *e* of the forming-plate E when the arm F is moved. Of these gears M' is substantially fixed, and hence when the arm F is moved its gears M work upon gear M' as if it were a rack. This causes motion to the plate E about *e* as an axis.

As the motion of the arm F is irregular and not always in the same direction for one continuous movement of the former-plate E, I cause the gear M' to be moved somewhat to compensate for this. On the shaft L, I arrange

a cam K, which acts upon a rod k to reciprocate it, and this by link k^2 rocks the gear or rack M'. The cams K and K' insure a proper return movement of the arm F and former-plate E, and in time with the rotations of the cylinder C. In place of these devices for controlling the movement of the plate E relatively to the cylinder C the said plate may be moved or operated by any other suitable means. The return movement of the plate E is unimportant, so long as it is secured in time to receive a new bag-tube or section thereof.

The cylinder C has pivoted upon its periphery fingers G G, which are normally out of the line of the bag-tube, but which may be projected inwardly by the action of a cam I', secured to the main frame A. The fingers G G are connected together by arms g and a link G', arranged in the under side of the cylinder-surface, and one of them is further provided with an arm G^3, adapted to come in contact with the cam I' during the rotation of the cylinder and thus cause said fingers to be projected inward, as indicated in dotted lines in Fig. 2, so as to enter the bellows side folds of the tube. The former-plate E has its rear edge made sharp, as at W, so that when it presses downward upon the bag-tube it forms a transverse crease about which the paper bends, as clearly shown in Figs. 4 and 6. This former-plate E is also provided with fingers H H, corresponding to the fingers G G, which are connected by arms h and link H' precisely as are connected the fingers G G, and are operated by means of a spring J in one direction to hold them out of action, and a stationary cam I, acting upon an arm or projection H^2, to move them inward or in the other direction, so that they enter the bellows side folds precisely as at the fingers G G. Stops J' limit their movement in one direction.

The rear or free end of the former-plate E is provided with eyes E^2, which are received upon projections A', as clearly shown in Fig. 3, so as to be maintained out of the line of the bag-tube in entering between the said plate and the cylinder C after it has been caught by the nipper c and moved forward. When the bag-tube is moved to the position shown in Fig. 3, the upper layer of the paper is moved over a finger E', arranged adjacent to the axis e and below the former-plate E. As the plate E is moved forward with the bag-tube the eye E^2 leaves the projection A', as shown in Fig. 4, and the edge W presses down upon the paper, forming a line or crease. It will also be observed that as this takes place the fingers G H upon each side at their free ends are brought more or less together, and at the same time the finger E' moves away from the nipper c, opening the bellows side folds, as indicated in Fig. 4. This permits the ready entrance of the fingers G H under the action of the cams I' I, and these fingers continue to maintain their position during the successive formative actions of the machine. As the cylinder C moves forward the plate E rotates upon its own axis e and also about edge W as an axis, as indicated in Figs. 6, 7, and 8, which action is so timed that the several fingers G H, nippers g, and finger E' operate to form the several actions upon the tube substantially in the manner as indicated in Figs. 2 to 8. As this folding action is completed the fingers G H quickly fly out of the folds of the tubes when their arms G^3 H^3 lift the cams I' I, and the bag in its folded condition is still held by the nipper c and carried forward with the cylinder C. It is then delivered to the rolls S, having pins s, thence to the paste-rolls Q T, of which Q applies the paste after having received it from the rolls P P and vat O. The bottom is then folded by the knife r, which folds the paper upon itself between pressure-rolls R R. It is quite evident that the delivery, paste, and subsequent folding devices may be made in any of the well-known manners, and their particular construction is immaterial to my invention. I do not, therefore, deem it necessary to describe the minute details of these devices, but illustrate them so as to show their relative position in a machine of the class described.

When the cylinder C advances sufficiently to deliver the bag to the feed-rolls S, the star-wheel reaches the pin C^2 and opens the nipper c to release the paper bag, and the said nipper remains open until it reaches the pin C^3, which closes the nipper upon another bag-tube. I have shown two such nippers and their operating mechanism, and it is evident that so far as my improvements are concerned one or more of these devices may be employed by simply reducing or enlarging the diameter of the cylinder C, maintaining its surface speed the same.

As soon as the tube has been withdrawn from the plate E the said plate is caused to return to its original position by the operation of the arm F, cams, and gears, so that it shall be in the proper position to receive the next paper tube. As before explained, the gear M' is in effect substantially a rack, but moved by cam K, and as the arm F is oscillated about f as a center by cam K' the intermediate gear M and gear N causes a proper rotation or oscillation of the plate E about e as a center. The movement of the arm F is governed by the cam K' and arm F'', and is so timed that while permitting the rotation or oscillation of the plate E about its axis e it insures the edge W moving exactly at the same speed of the surface speed of the cylinder C, so as not to displace in any manner the tube.

While I have shown the nippers upon the cylinder C, they are not necessary, as the paper tube may be severed into bag-tube sections W, Fig. 10, but left connected by short connections w, Fig. 11, so that it is in effect pulled by itself about cylinder C under the action of the rolls S' The rollers S' may be

cutting-rolls, which while drawing the tube-section through sever the bag-tube sections before they go to the pasting devices. This method of operating is indicated in Fig. 9. It will be observed that as the tube is bent over the cylinder C the upper layer will rise and pass above the finger E' of the former-plate E. In this case the bag-tube will have the diamond folds made upon the tube while still connected together. It will thus be seen that it is not necessary to employ the nippers upon the cylinder C, though it may be more desirable to use them.

It is evident that the mere mechanism for securing the several movements to the different parts may be modified or changed in various ways without departing from the spirit of the invention, and I do not, therefore, confine myself to the details of construction here shown.

What I claim as new, and desire to secure by Letters Patent, is—

1. In a paper-bag machine, the combination of a rotating cylinder provided with one or more pairs of side-folding fingers adapted to be moved toward or from each other, a forming-plate also provided with side-forming fingers adapted to be moved toward or from each other, means for operating said fingers at definite times during the formative action upon the bag-tube, operating means for the forming-plate adapted to cause the said plate to oscillate about its rear edge upon the surface of the cylinder during the rotary movement of said cylinder, the whole operating for the purpose of opening and forming the bottom of the bag-tube, and means to move the bag-tube with the cylinder.

2. In a paper-bag machine, the combination of the rotating cylinder provided with one or more pairs of side-folding fingers adapted to be moved toward or from each other, a forming-plate also provided with side-forming fingers adapted to be moved toward or from each other, means for operating said fingers at definite times during the formative action upon the bag-tube, operating means for the forming-plate adapted to cause the said plate to oscillate about its rear edge upon the surface of the cylinder during the rotary movement of said cylinder for the purpose of opening and forming the bottom of the bag-tube, a finger moving with the forming-plate for receiving the upper sheet of the tube and lifting it during the formative action, power devices for returning the forming-plate to its original position to receive a new bag-tube, and means to move the bag-tube with the cylinder.

3. In a paper-bag machine, the combination of the rotating cylinder provided with one or more pairs of side-folding fingers adapted to be moved toward or from each other, a forming-plate also provided with side-forming fingers adapted to be moved toward or from each other, means for operating said fingers at definite times during the formative action upon the bag-tube, operating means for the forming-plate adapted to cause the said plate to oscillate about its rear edge upon the surface of the cylinder during the rotary movement of said cylinder for the purpose of opening and forming the bottom of the bag-tube, a finger moving with the forming-plate for receiving the upper sheet of the tube and lifting it during the formative action, power devices for returning the forming-plate to its original position to receive a new bag-tube, means to sustain the rear of the forming-plate clear of the surface of the revolving cylinder so as to permit the proper entrance of the paper bag between the former-plate and the surface of the cylinder, and means to move the bag-tube with the cylinder.

4. In a paper-bag machine, the combination of the rotating cylinder provided with one or more pairs of side-folding fingers adapted to be moved toward or from each other, a forming-plate also provided with forming side fingers adapted to be moved toward or from each other, means for operating said fingers at definite times during the formative action upon the bag-tube, operating means for the forming-plate adapted to cause the said plate to oscillate about its rear edge upon the surface of the cylinder during the rotary movement of said cylinder for the purpose of opening and forming the bottom of the bag-tube, means to sustain the rear of the forming-plate clear of the surface of the revolving cylinder so as to permit the proper entrance of the paper bag between the former-plate and the surface of the cylinder, and means to move the bag-tube with the cylinder.

5. In a paper-bag machine, the combination of a rotating cylinder provided with one or more nippers, power devices for opening and closing the nippers at predetermined intervals of time, pivoted side-forming fingers G G carried upon the surface of the cylinder and upon each side thereof so as to receive the bag-tube between them, power devices for operating the fingers G, G at definite times during their movement forward with the cylinder, a forming-plate E also provided with side-forming fingers H H adapted to be brought into alinement above the fingers G G in the preliminary operation of forming the bag, a movable frame to which said forming-plate is hinged, power devices for moving said movable frame, power devices for oscillating the said forming-plate upon the movable frame so that its rear edge travels in conjunction with and at the same rate of speed as the cylinder, and means for operating the forming-fingers of the former-plate.

6. In a paper-bag machine, the combination of a rotating cylinder provided with one or more nippers, power devices for opening and closing the nippers at predetermined intervals of time, pivoted forming-fingers G G carried upon the surface of the cylinder and upon each side thereof so as to receive the bag-tube between them, power devices for operating

the fingers G G at definite times during their movement forward with the cylinder, a forming-plate E also provided with the forming-fingers H H adapted to be brought into alinement above the fingers G G in the preliminary operation of forming the bag and also provided with a finger rearwardly extending at its forward end for separating the upper layer of the bag-tube when opening the same during the oscillation of the plate, a movable frame to which said forming-plate is hinged, power devices for moving said movable frame, power devices for oscillating the said forming-plate upon the movable frame so that its rear edge travels in conjunction with and at the same rate of speed as the cylinder, and means for operating the forming-fingers of the forming-plate.

7. In a paper-bag machine, the combination of the rotating cylinder for the bag-tube provided with one or more pairs of folding-fingers adapted to be moved toward or from each other, a forming-plate also provided with forming-fingers adapted to be moved toward or from each other, means for operating said fingers at definite times during the formative action upon the bag-tube, operating means for the forming-plate adapted to cause the said plate to oscillate about its rear edge upon the surface of the cylinder during the rotary movement of said cylinder for the purpose of opening and forming the bottom of the bag-tube, and connecting mechanism for timing the movements of the rotating cylinder and the forming-plate.

8. In a paper-bag machine, the combination of a rotating cylinder provided with one or more nippers, power devices for opening and closing the nippers at predetermined intervals of time, pivoted forming-fingers G G carried upon the surface of the cylinder and upon each side thereof so as to receive the bag-tube between them, power devices for operating the fingers G, G at definite times during their movement forward with the cylinder, a forming-plate E also provided with forming-fingers H H adapted to be brought into alinement above the fingers G G in the preliminary operation of forming the bag, a movable frame to which said forming-plate is hinged, power devices for moving said movable frame, power devices for oscillating the said forming-plate upon the movable frame so that its rear edge travels in conjunction with and at the same rate of speed as the cylinder, means for operating the forming-fingers of the forming-plate, and connecting devices for timing the movements of the movable frame the former-plate and the rotating cylinder.

In testimony of which invention I have hereunto set my hand.

WM. LIDDELL.

Witnesses:
R. M. HUNTER,
ERNEST HOWARD HUNTER.

(No Model.) 8 Sheets—Sheet 1.

E. E. CLAUSSEN.

PAPER BAG MACHINE.

No. 598,497. Patented Feb. 8, 1898.

Fig. 1.

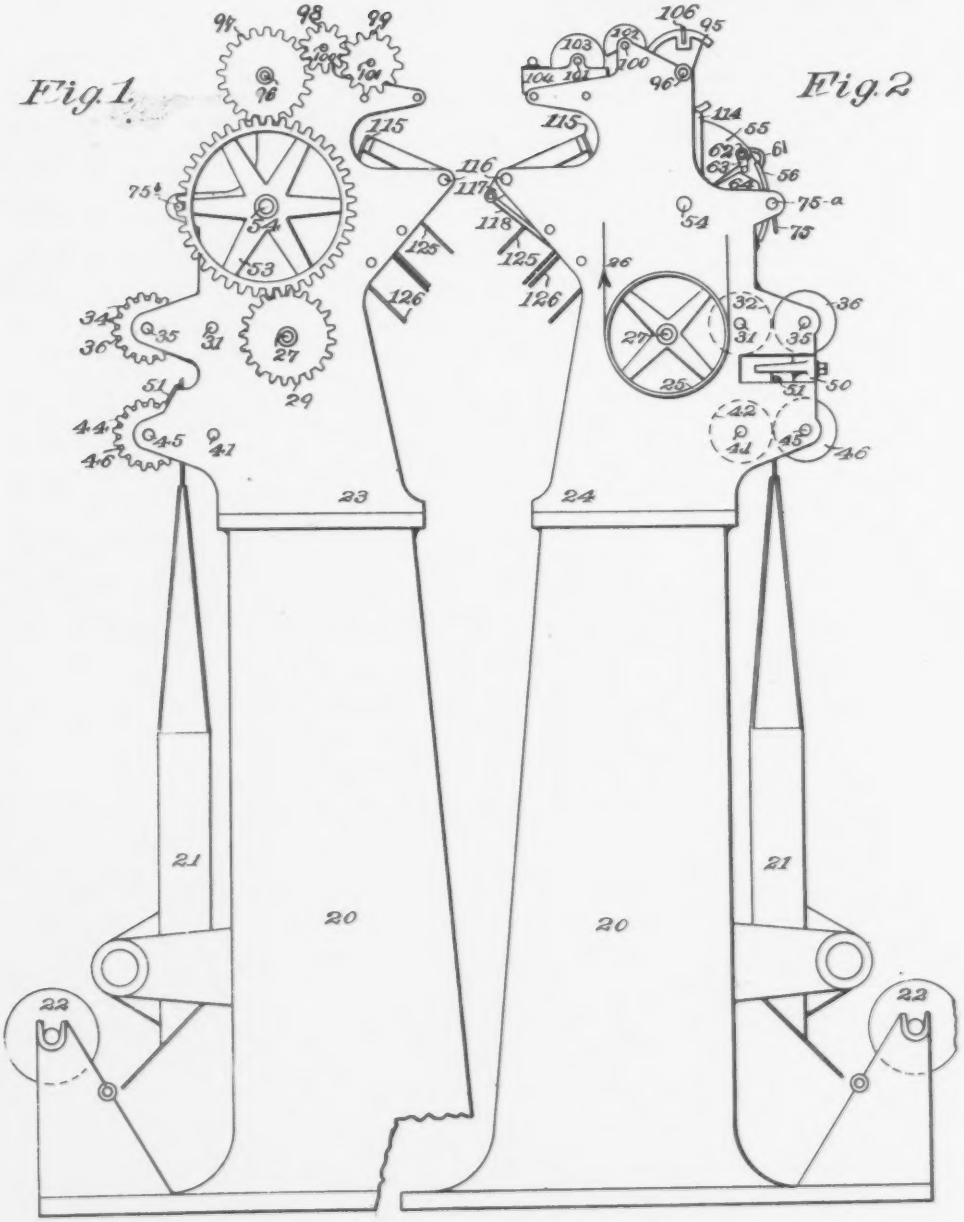

Fig. 2.

Witnesses:
Jantte S Ellsworth
Isaac A Allen Jr

Inventor:
Edward E. Claussen.

THE NORRIS PETERS CO., WASHINGTON, D. C.

(No Model.) 8 Sheets—Sheet 2.

E. E. CLAUSSEN.

PAPER BAG MACHINE.

No. 598,497. Patented Feb. 8, 1898.

Fig. 3

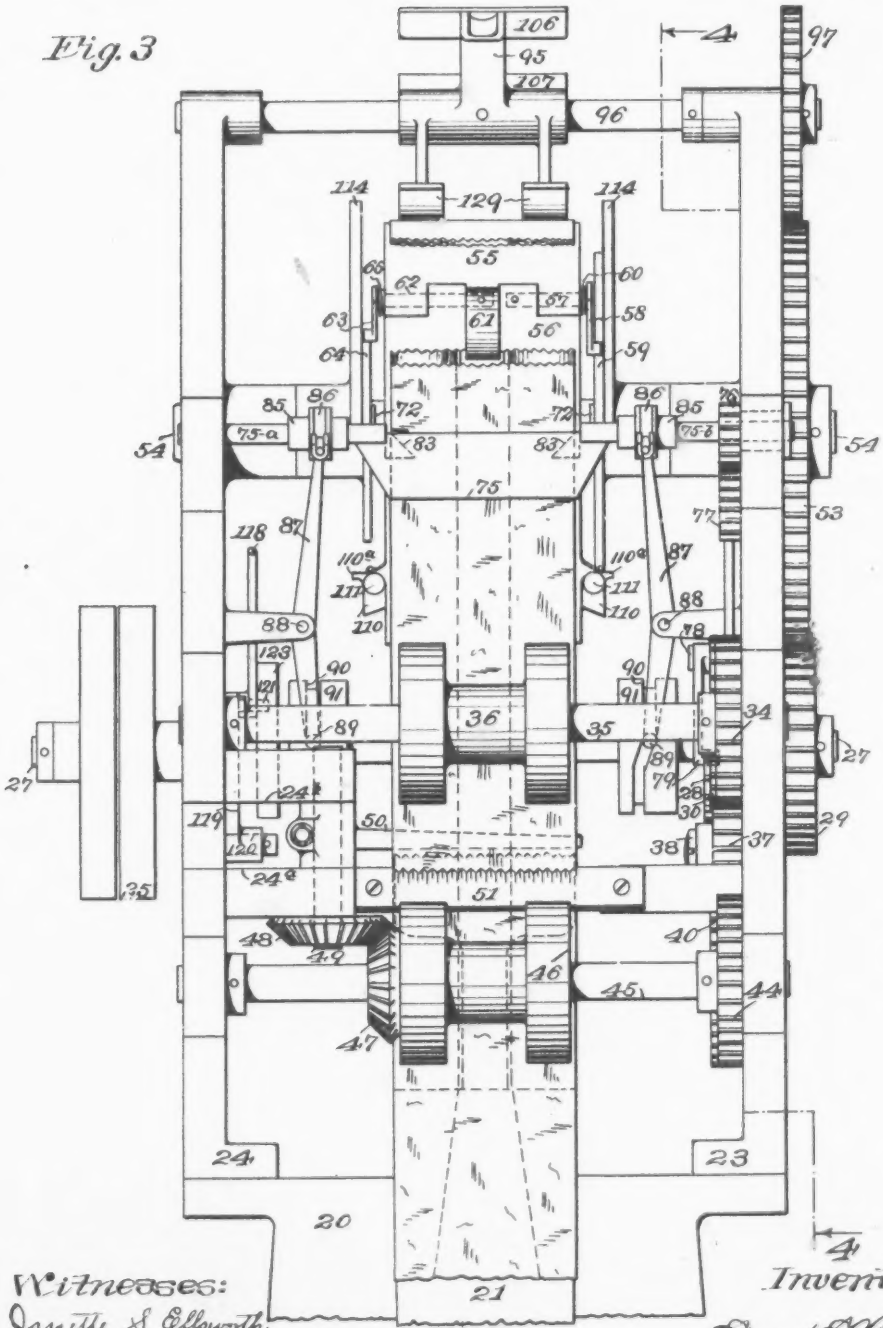

Witnesses:
Janette S Ellsworth
Isaac A. Allen Jr.

Inventor:
Edward E. Claussen

THE NORRIS PETERS CO., WASHINGTON, D. C.

(No Model.) 8 Sheets—Sheet 3.

E. E. CLAUSSEN.

PAPER BAG MACHINE.

No. 598,497. Patented Feb. 8, 1898.

Fig. 4.

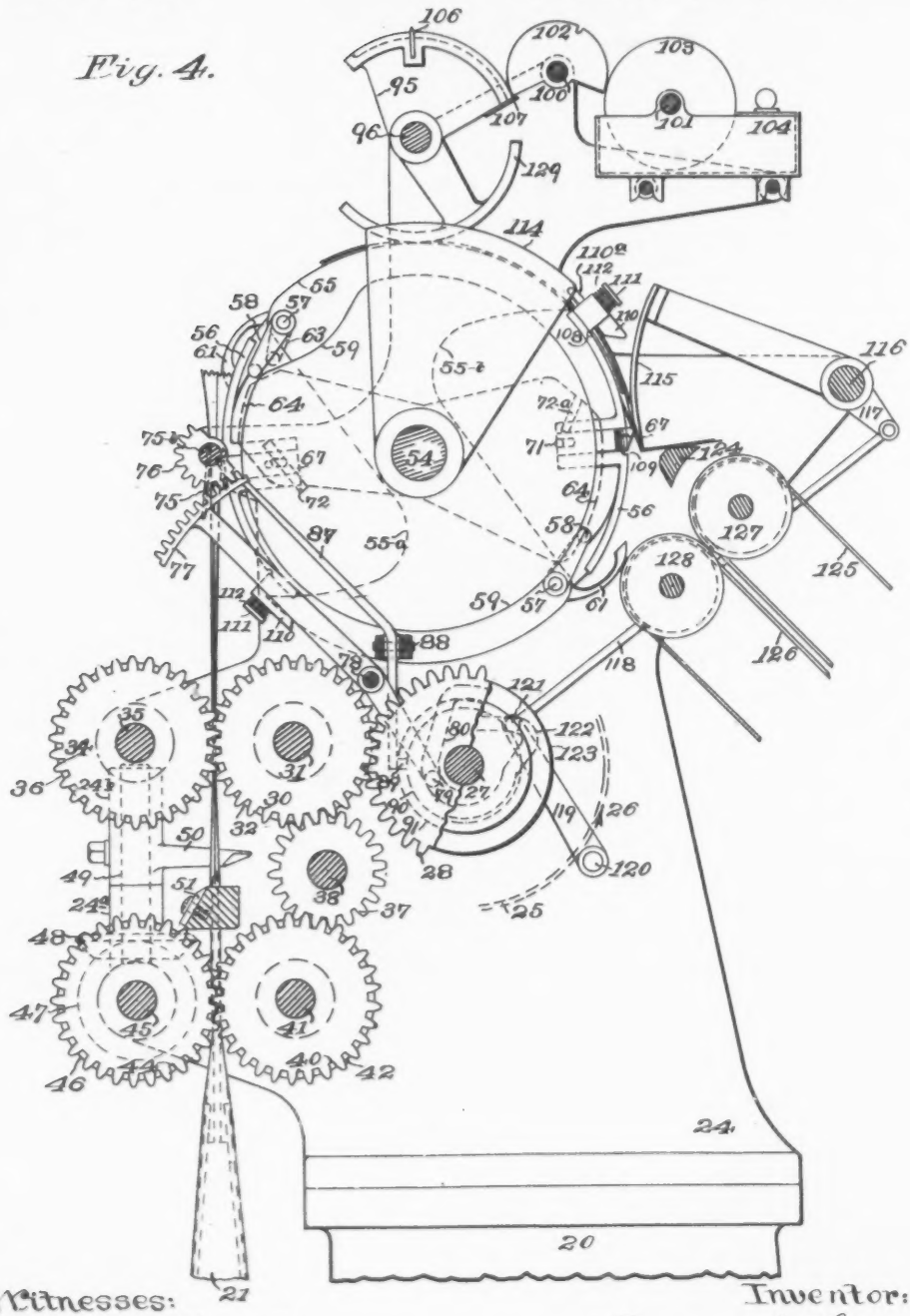

Witnesses:
Janette S Ellsworth
Isaac A. Allen Jr.

Inventor:
Edward E. Claussen

THE NORRIS PETERS CO., WASHINGTON, D. C.

(No Model.)

8 Sheets—Sheet 4.

E. E. CLAUSSEN.

PAPER BAG MACHINE.

No. 598,497. Patented Feb. 8, 1898.

Fig. 5

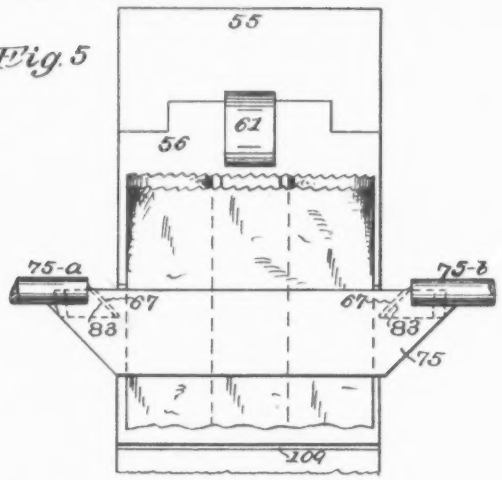

Fig. 6

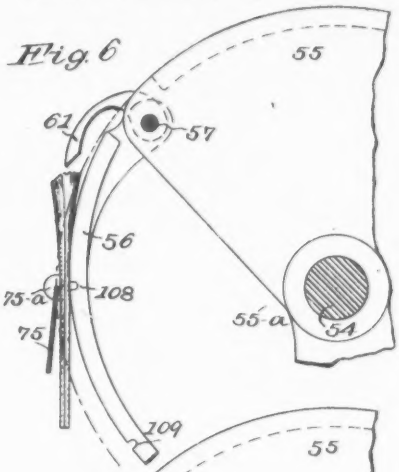

Fig. 7

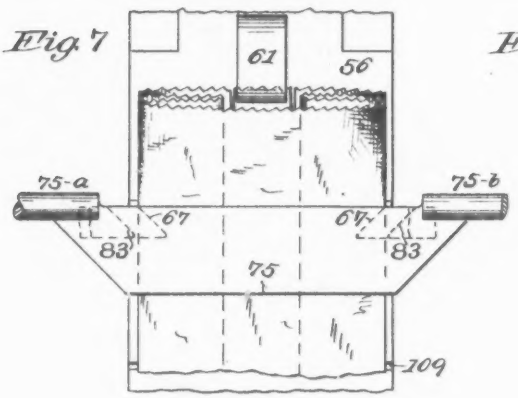

Fig. 8.

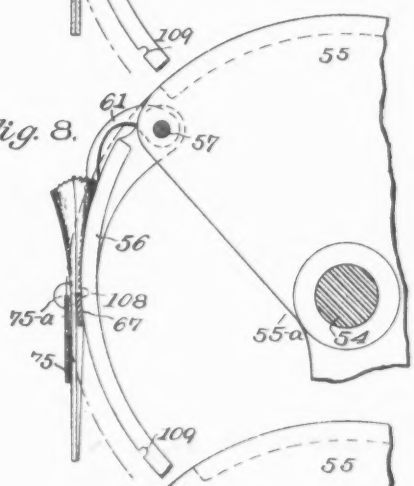

Fig. 9

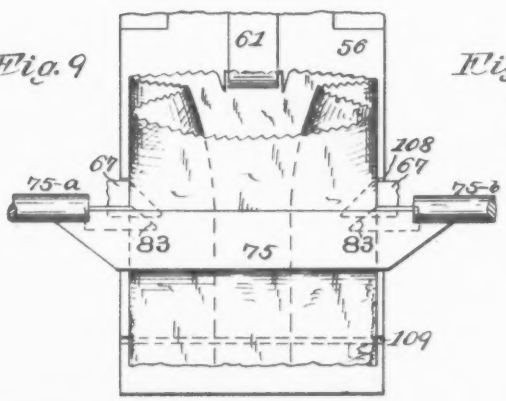

Fig. 10

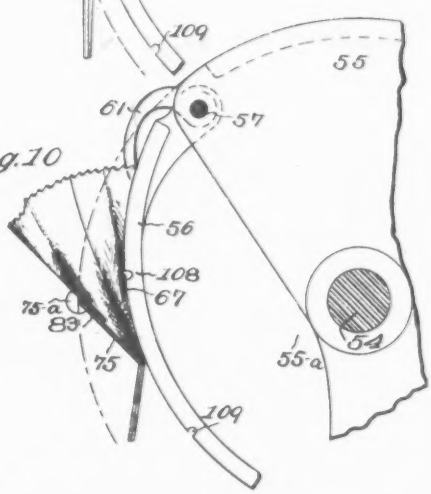

Witnesses:
Janette S. Ellsworth
Isaac A. Allen Jr.

Inventor:
Edward E. Claussen.

THE NORRIS PETERS CO., WASHINGTON, D. C.

(No Model.) 8 Sheets—Sheet 5.

E. E. CLAUSSEN.

PAPER BAG MACHINE.

No. 598,497 Patented Feb. 8, 1898.

Fig. 11.

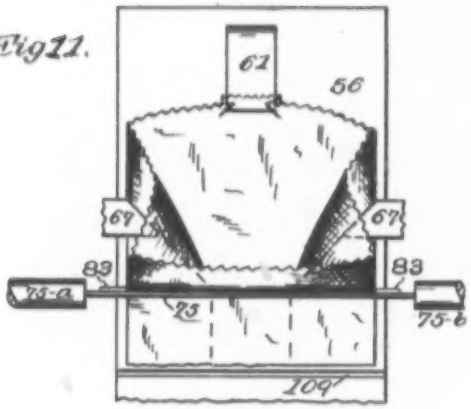

Fig. 12.

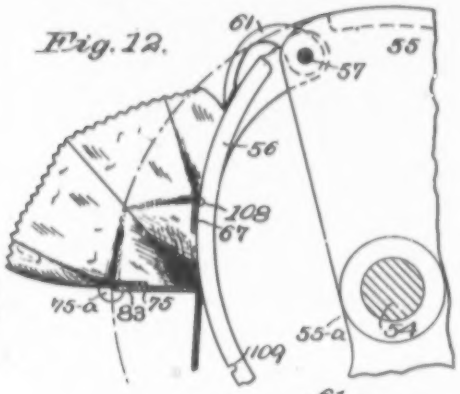

Fig. 13.

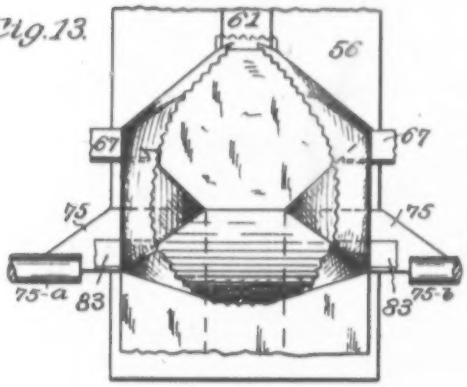

Fig. 14.

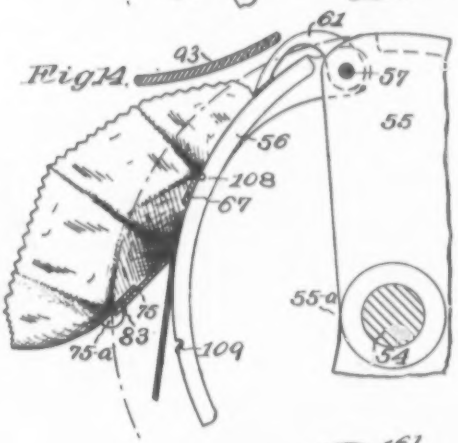

Fig. 15

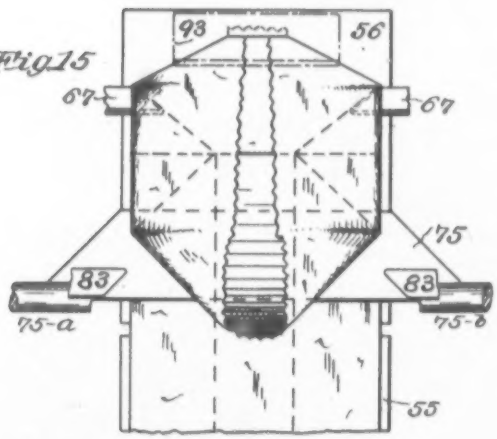

Fig. 16

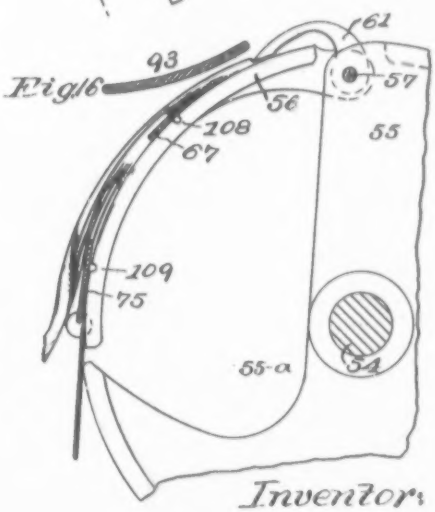

Witnesses:
Janette S Ellsworth
Isaac A. Allen Jr.

Inventor:
Edward E. Claussen

THE NORRIS PETERS CO., WASHINGTON, D. C.

(No Model.) 8 Sheets—Sheet 6

E. E. CLAUSSEN.

PAPER BAG MACHINE.

No. 598,497. Patented Feb. 8, 1898.

Fig. 17

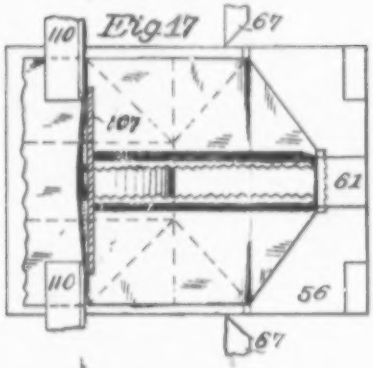

Fig. 19

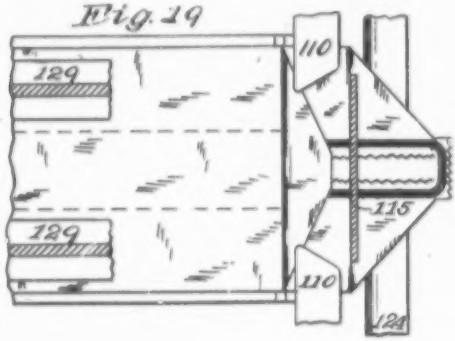

Fig. 18

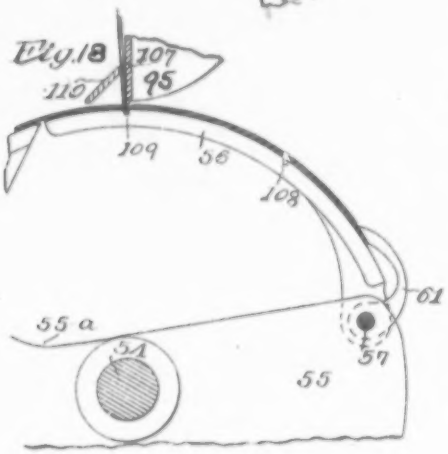

Fig. 20.

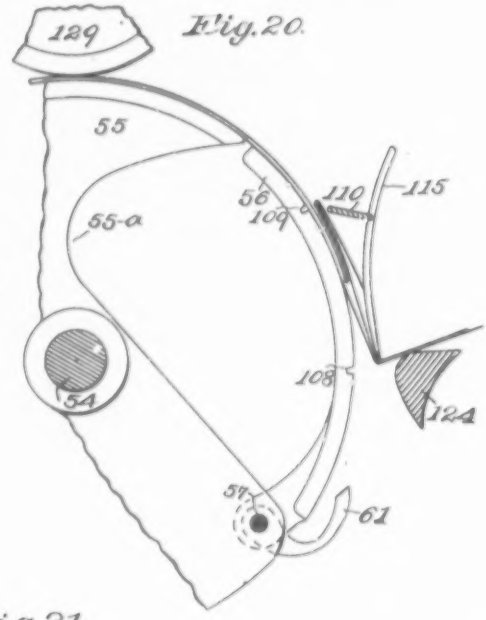

Fig. 21.

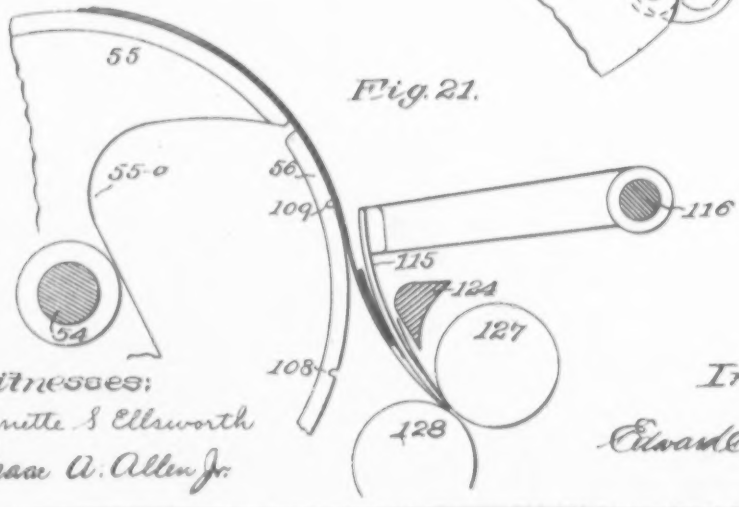

Witnesses:
Janette S Ellsworth
Isaac A. Allen Jr.

Inventor:
Edward E. Claussen

(No Model.) 8 Sheets—Sheet 7.

E. E. CLAUSSEN.

PAPER BAG MACHINE.

No. 598,497. Patented Feb. 8, 1898.

Fig. 22

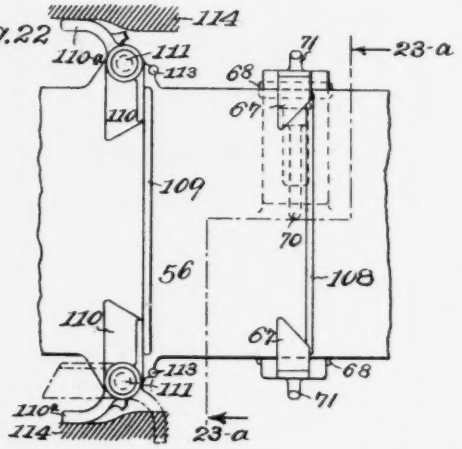

Fig. 23

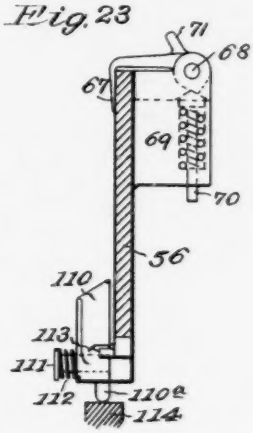

Fig. 24

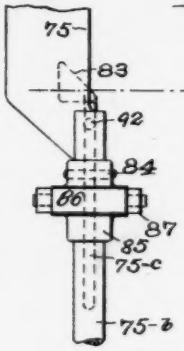

Fig. 25

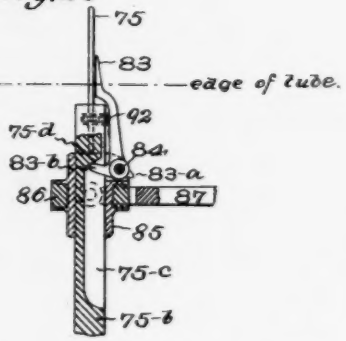

Fig. 26

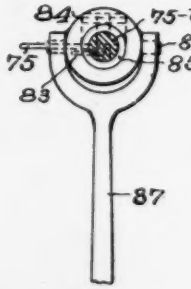

Witnesses:
Janette S. Ellsworth
Isaac A. Allen Jr.

Inventor:
Edward E. Claussen.

(No Model.)

8 Sheets—Sheet 8.

E. E. CLAUSSEN.

PAPER BAG MACHINE.

No. 598,497. Patented Feb. 8, 1898.

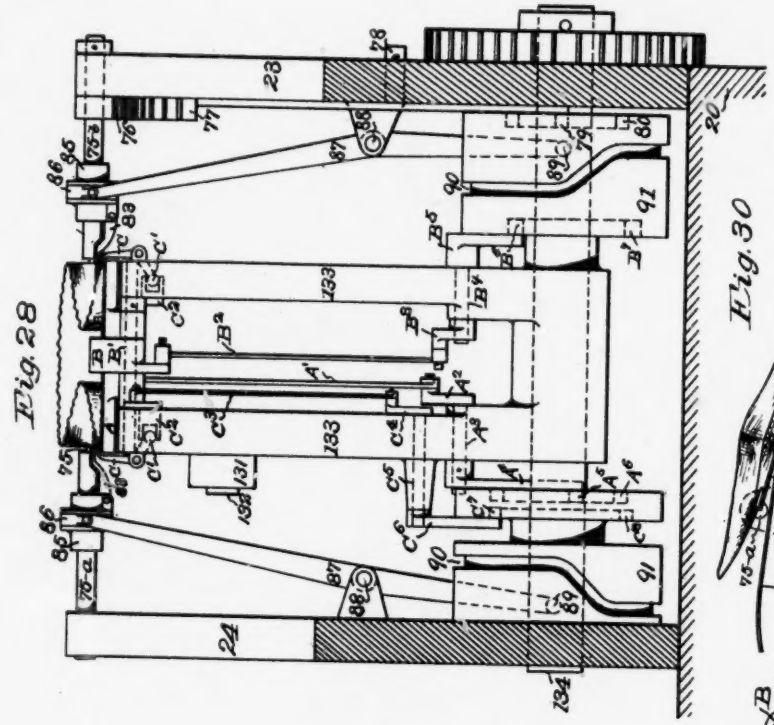

Fig. 28.

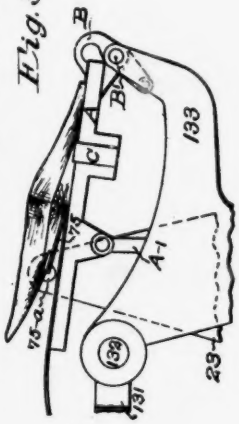

Fig. 30.

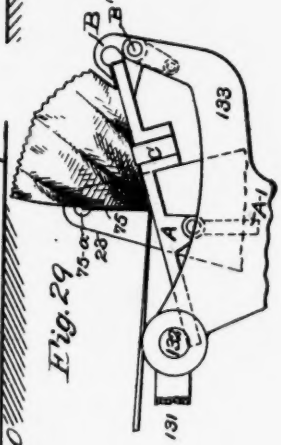

Fig. 29.

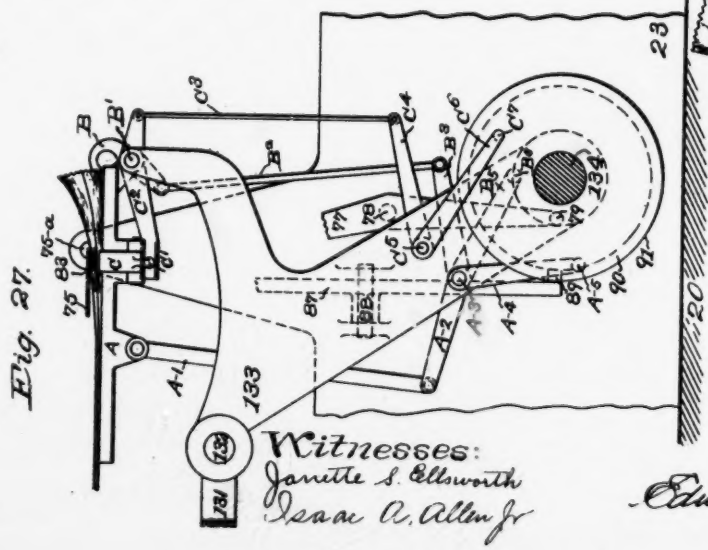

Fig. 27.

Witnesses:
Janette S. Ellsworth
Isaac A. Allen Jr

Inventor:
Edward E. Claussen

UNITED STATES PATENT OFFICE.

EDWARD E. CLAUSSEN, OF HARTFORD, CONNECTICUT, ASSIGNOR TO ALBERT H. WALKER, TRUSTEE, OF SAME PLACE.

PAPER-BAG MACHINE.

SPECIFICATION forming part of Letters Patent No. 598,497, dated February 8, 1898.

Application filed July 29, 1896. Serial No. 600,861. (No model.)

To all whom it may concern:

Be it known that I, EDWARD E. CLAUSSEN, a citizen of the United States, residing at Hartford, in the county of Hartford and State of Connecticut, have invented certain new and useful Improvements in Paper-Bag Machines, of which the following is a full, clear, and exact specification.

This machine automatically manufactures continuous tucked-paper tubing into square-bottom paper bags like those of Reissue Letters Patent No. 10,083.

The mechanisms herein shown and described have the folding-bed represented as a supplemental carrier, which is pivoted to a conveyer and adapted to be oscillated when the blank is held to that folding-bed and during the period the conveyer propels the carrier onward. The conveyer may be a continuous-rotating cylinder or a reciprocating or oscillating carriage, and I have therefore shown and described this invention in its adaptation to both of those types of machines.

In my present invention a continuous tucked tube is formed on a former, drawn through a set of drawing-rolls, and severed into bag-blank lengths and delivered into the bottom-forming mechanisms for forming the characteristic primary transverse folding-line and unfolding the tucks and forming the inside triangular folds, and the diamond-formed blanks thus produced are transferred to mechanisms for pasting, cross-folding, and closing the flaps to complete the bag.

The bottom-forming mechanisms consist of a vibrating tucker-plate provided with bevel-edged side nippers trunnioned in stationary frames and arranged to vibrate above the tubular blank in such a manner that as the bottom-forming end of the tube passes along beneath the same the bevel-edged side nippers swing into the tucks of the tube and clasp and hold them to the tucker-plate. Coacting with the tucker-plate is a supplemental carrier arranged and operating below the tubular blank and which is pivoted to the "conveyer," (as I have arbitrarily called the same,) which may be a cylinder, or on a rocking carriage, as is shown in the drawings. The supplemental carrier is also provided with a pair of bevel-edged side clips and a front clip, the former adapted to swing into the tucks of the bellows-sided tube and hold the plies of the lower tucks, and the latter arranged to swing down on the lower ply of the tube and hold the same to the supplemental carrier. The tube being held by these instrumentalities, the tucker-plate is caused to vibrate on its trunnions mounted in the stationary frames, and simultaneously the supplemental carrier is caused to oscillate, and thus the tube is unfolded, the primary transverse folding-line across the tubular blank is defined, the inside triangular folds formed, and the well-known diamond form produced.

The machine as herein shown and described in its preferred construction employs two supplemental carriers oscillating upon a cylinder; but it is obvious that one supplemental carrier will answer, or more than two can be arranged for, depending upon the length and size of the bag to be produced.

Figure 1 represents a right-hand side elevation of the machine of preferred construction, the conveyer being represented as a continuous-revolving cylinder. Fig. 2 is a left-hand side elevation of that which is represented in Fig. 1. Fig. 3 is a front view of the machine, drawn on an enlarged scale, showing the tucked-paper tube gripped between the drawing-rolls and in a position ready for the bottom-forming mechanisms to operate thereon, also showing the striker in a position ready to sever the blank from the continuous tube, and also showing a part of the broken-away former. Fig. 4 is a side view taken on the broken line 4 4 of Fig. 3 in the direction of the arrows. Figs. 5 to 21, inclusive, show plan and edge views of the blank at different stages when the bottom-forming mechanisms are in operation thereon or the flaps being folded. The views are drawn on an enlarged scale in relation to the previous views. Figs. 22 and 23 represent a plan and an end view of the bevel-edged side clips as arranged on the supplemental carrier, taken on the broken line 23 of Fig. 22 in the direction of the arrows, also showing the mode of operation and detail construction of the rear-flap-folding mechanisms. Figs. 24, 25, and 26 are a plan, an end, and a side view of the tucker-plate with its side nippers operating thereon. Figs. 27 and

28 are a side and end view, respectively, of a modified form of the conveyer adapting the supplemental carrier to a rocking or reciprocating carriage and showing the blank clasped by the front clip and bevel-edged side clips to that carrier. Figs. 29 and 30 represent the blank in a further advanced stage than that shown in Fig. 27.

In the following specification and accompanying drawings similar letters and numerals of reference designate like or equivalent parts wherever found throughout the several views, and the numeral 20 designates the frame of the machine, to which is attached the former 21 in the well-known manner and which also supports at the lower end in brackets the roll of paper 22, from which the paper is drawn and folded into the continuous tucked tubing from which the bag-blanks are severed. At the upper end the frame carries on each side the uprights 23 and 24, in which the various shafts and mechanisms are journaled, as hereinafter more fully described.

Motion is communicated to the machine by means of the pulley 25, driven in the direction of the arrow 26, (see Fig. 2,) fastened to the shaft 27, which is journaled in the uprights 23 and 24 and carries on the inner side of the upright 23 a gear 28 and on the outer side of the upright the gear 29, from which the different mechanisms are driven.

The gear 28 meshes into the gear 30, which is fastened to the shaft 31, which is journaled in the uprights 23 and 24 and has fixed upon it the upper rear drawing-roll 32. The gear 30 meshes into the gear 34, which is fastened to the shaft 35, which is journaled in the uprights 23 and 24 and has fastened thereto the upper front drawing-roll 36. The gear 30 also meshes into the intermediate gear 37, which is rotatably mounted on the stud 38, fastened to the upright 23, and which meshes into the gear 40, fastened to the shaft 41, which is journaled in the uprights 23 and 24 and has fixed upon it the lower rear drawing-roll 42. The gear 40 meshes again into the gear 44, fastened onto the shaft 45, which carries the lower front drawing-roll 46. Fastened to the shaft 45, on the left-hand side of the drawing-roll 46, is the miter 47, meshing into the miter 48 on the striker-shaft 49, which is journaled in projecting lugs 24^a and 24^b of the upright 24 and carries clamped thereto the striker-arm 50, which revolves across the path of the tube, carrying it against the serrated knife 51 and severing a blank at each rotation. The gears 30, 34, 40, and 44, with their corresponding rolls 32, 36, 42, and 46, are so geared in relation to the striker-arm 50 that to each revolution of the striker-arm a suitable length of tubing is drawn forward to make the body and the bottom-forming end of the bag-blank.

By the means above described a continuous motion is transferred from the driving mechanisms to the drawing-rolls, the tucked-paper tube severed into bag-blank lengths and delivered to the bottom-forming mechanisms to perform their respective functions, as will now be explained.

On the right-hand side of the upright 23 and fastened to the shaft 27, as previously stated, is the gear 29, which meshes into the cylinder-gear 53, fastened to the shaft 54, which is journaled in the uprights 23 and 24, and has fastened thereto the mutilated cylinder 55, having the mutilations or sector-like sections 55^a and 55^b, into which the supplemental carriers are permitted to oscillate, and the tops or supporting-surfaces of the supplemental carriers form the supplement of the mutilation of the cylinder. The normal position of the supplemental carriers is that position where the tops or folding-surfaces of the carriers form the continuation of the cylinder. In the drawings two of these supplemental carriers are shown, (indicated by the numeral 56,) pivoted to the cylinder by the shaft 57, the free end of which has attached thereto the cam-arm 58, adapted to engage the stationary cam 59, mounted on the inwardly-projecting hub of the upright 23.

60 is a spring that keeps the cam-arm 58 in engagement with its cam, which is of such shape that as the supplemental carrier is carried around by the rotation of the cylinder the carrier is caused to be oscillated toward the center of the cylinder and immediately returned to its normal position, as clearly shown in the drawings from Figs. 3 to 21, inclusive.

The supplemental carriers are provided with front clips 61, fastened to shafts 62. Their free ends are provided with cam-arms 63, engaging the stationary cam 64, fastened to a projecting hub of the upright 24. The timing of the cam 64 in relation to the rotation of the cylinder and the severing of the blank by the rotation of the striker-arm is such that the front clip 61 is caused to close against the pressure of the spring 65 as the leading end of the tube advances and holds the lower ply of the tube thereto, as shown in Figs. 3 to 21, inclusive, to carry the same onward and to release the same again when the diamond form is completed. The supplemental carriers are also provided with two pairs of bevel-edged side clips—that is, with each front clip is coacting one pair of oppositely-disposed bevel-edged side clips 67, pivotally mounted on shafts 68 in bosses 69 beneath the folding-surfaces of the supplemental carriers. The side clips are held in an open or closed position by the spring-pressed plungers 70 and operated by the projections 71, as best shown in Figs. 22 and 23. These projections 71 are caused to operate as the cylinder revolves by the cam-strips 72 and 72^a, respectively fastened on the right-hand side of the machine to the stationary cam 59 and on the left-hand side to the stationary cam 64. The cam 59, which causes to operate the supplemental carriers 56, the cam 64, which

POOR COPY

causes to operate the front clips 61, and the cam-strips 72 and 72^a, which cause to operate the bevel-edged side clips as the cylinder revolves, are so shaped in relation to the rotation of the cylinder and the advancing bottom-forming end of the tucked-paper tube that the folding-surface of the supplemental carrier is slightly brought out of its normal position—that is, out of the circular path of the cylinder, (see Figs. 4, 5, and 6)—to enable the tucks of the tube to distend and open to allow the side clips, as well as the front clips, to enter more readily and hold the lower ply of the tube and the lower plies of the tucks to that supplemental carrier and to carry the blank onward, while the remainder of the bottom-forming mechanisms that are mounted above the paper-bag blank are in engagement therewith, as will now be fully explained.

Above the paper-bag blank is mounted the tucker-plate 75 in trunnions 75^a and 75^b in the stationary uprights 23 and 24 and capable of being vibrated by means of the pinion-sector 76, rigidly connected to the trunnions 75^b and meshing into the sector 77, pivotally mounted on the stud 78, which is attached to the inner side of the upright 23. The lower projecting arm of the sector 77 is provided with the projection 79, engaging a cam-groove 80 in the gear 28.

The vibrating tucker-plate is provided with two oppositely-disposed bevel-edged side nippers 83, pivotally mounted by the pivots 84 in the slides 85, which are adapted to receive a lateral oscillatory motion by means of the collars 86, the laterally-projecting trunnions of which engage the bifurcated arms 87, pivoted in the projecting hubs of the uprights 23 and 24 on the studs 88. The lower ends of the arms 87 are provided with the extensions 89, engaging cam-grooves 90 of cams 91. Springs 92 tend to press the nippers away from the tucker-plate, and thus open the same to the extent permitted by the lugs 83^a, which come in contact with the collar 86. The nippers 83 are closed and pressed on the tucker-plate by means of extension 83^b, projecting into the spline 75^c of the trunnions and abutting the end of the spline in the trunnions, as at 75^d. The inward motion of the arms 87 thus cause to close and press the nippers on the tucker-plate, as is clearly illustrated in Figs. 24, 25, and 26. The center line of the trunnions 75^a and 75^b coincides with a line that passes through the two intersecting points formed by the edges of the tube and the forty-five-degree edges of the nippers.

The distance from the center line of the trunnions to the folding edge of the tucker-plate is substantially equal to the depth of the tucks, and that folding edge serves to define the primary transverse folding-line across the tubular blank as the same is propelled onward by the cylinder. The timing of the cam-grooves 90, that cause to operate the side nippers, and the cam-groove 80 in the gear 28, that causes to vibrate the tucker-plate 75, is in relation to the rotation of the cylinder and the supplemental carrier carried thereby with its clips such that as the bottom-forming end of the tube enters the folding mechanisms the tube is gripped by grippers on the supplemental carrier and simultaneously the nippers enter the tucks and hold the upper plies of the tucks to the tucker-plate. The supplemental carrier as it is carried along by the cylinder is then caused to swing away from the tucker-plate and simultaneously the tucker-plate is caused to vibrate at the rate of speed of the combined movement of the carrier and the rotation of the cylinder, and in this manner the tucks of the tube are distended and unfolded into the well-known inside triangular folds, and the tucker-plate defines the primary transverse folding-line across the tube, as is clearly shown in the drawings in Figs. 5 to 16, inclusive, and converts the tubular blank of Figs. 5 and 6 into the diamond form of Figs. 15 and 16.

As the supplemental carrier rocks from its lowest position back to the normal position the formation and the flattening of the diamond are aided by rocking against a stationary folder-plate, as at 93, (see Figs. 14 to 16,) held on a rod supported by the uprights 23 and 24. After the diamond is completed the paste is applied by sector 95, fastened to shaft 96, carrying connected thereto the gear 97 and meshing into the cylinder-gear 53. The gear 97 also drives the gears 98 and 99 on shafts 100 and 101, which have fastened thereto the paste-quadrant 102 and paste-roll 103, the latter turning in the paste-box 104.

The gears 97, 98, and 99 are geared with relation to the cylinder-gear 53 in such a manner that the face of the sector is presented to the cylinder twice to each revolution of the cylinder, and in this manner the paste is deposited upon each diamond-formed blank as it passes under the paste-sector.

The folding of the rear and front flaps is accomplished as follows: The paste-sector 95 has fastened thereto the two creaser-blades 106 and 107 at a distance apart measured on the circumference of the paste-sector equal to twice the depth of the tucks, which distance corresponds with the distance between the transverse creaser-grooves 108 and 109 in the supplementary carriers. To the supplementary carriers are pivotally mounted on studs 111, carried by lugs projecting on each side thereof, the plicators 110, held in their normally open position, as shown in Fig. 22 in the dash-and-dotted position, by springs 112 against stop-pins 113. The outer ends of the plicators have the projections 110^a, which as the carriers are carried around come in engagement with stationary cams 114, mounted on hubs, turning the same into the positions of Fig. 22 and beyond, as shown therein. The folding ends of the plicators that come in contact with the rear flap are preferably beveled about forty-five degrees,

with the tangential line passing through a point in the circumference of the cylinder where the plicators approach the nearest. The folder 115 for turning and folding the front flap is mounted on shaft 116, and journaled in the uprights 23 and 24, and on the left-hand side the shaft has fastened thereto an arm 117, to which is connected the connecting-rod 118, to the lower end of which is hinged the cam-arm 119 on the stationary stud 120. At the upper end of the arm 119 the same is provided with the projection 121, adapted to enter the cam-groove 122 of the cam 123. The folder-bar 124 reaches across from the upright 23 to the upright 24, and over that folder-bar the front flap is folded, as shown in Figs. 4, 19, 20, and 21, and then the completely-folded blank is delivered to bands 125 and 126, passing over delivery-rolls 127 and 128. The timing of the cams 114, that operate the plicators 110, and the timing of the cam 123, that operates the folder 115, and the timing of the cam 64, that operates the front clip 61, are such relatively to each other and to the rotation of the cylinder that the front clip 61 releases the forward end of the diamond blank before the cylinder has revolved far enough to carry that forward end down opposite the bar 124 and so that the plicators turn the rear end of the diamond form over upon the middle of the diamond form before the cylinder has revolved far enough to put the groove 109 opposite the bar 124 and so that the folder 115 thereupon engages with the blank along the transverse crease opposite the groove 109 and carries that part forward under the bar 124 into the bite of the rolls 127 and 128, and thus causes the bar 124 to fold the forward end of the diamond form backward over the middle part of the diamond form and over the rear flap, so as to complete the folding of the bag.

Figs. 27, 28, 29, and 30 represent this machine in the form where the supplemental carrier is attached to an oscillating conveyer instead of to a rotating cylinder.

The connecting-rod 131 is worked by a crank (not shown in the drawings) and is pivoted by a stud 132 to the rocking carriage 133, and that carriage rocks upon the shaft 134 in the uprights 23 and 24. The operation of the vibratory tucker-plate 75, with its coacting side nippers, is identical with the foregoing description, and therefore needs no further explanation. The supplemental carrier A receives an oscillatory motion by means of the connecting-rod A′, attached to arm A^2 on the shaft A^3, mounted in the carriage 133, the outer free end having attached the arm A^4, provided with projection A^5, engaging the cam-groove A^6.

At the front end of the carriage is pivotally mounted the front clip B on the stud B′ and operatively connected to the connecting-rod B^2, attached to the arm B^3, fastened to the shaft B^4, the free end of which has connected thereto the cam-arm B^5, provided with the extension B^6, engaging the cam-groove B^7. The bevel-edged side clips C, which are pivoted in hubs adjacent to and below the folding-surface and on oppositely-disposed sides of the supplemental carrier, have the extensions C′, which engage the arms C^2, which are fastened to the shaft B′, operatively connected to the connecting-rod C^3, the lower end of which is pivoted to the arm C^4, fastened to the shaft C^5, on the outside of which is carried the arm C^6, having the extension C^7, which engages the cam-groove C^8. The cam-groove A^6, that causes to operate the supplemental carrier A, the cam-groove B^7, that operates the front clip B, and the cam-groove C^8, that operates the side clips C, are timed in relation to the oscillation of the reciprocating carriage 133 so that when the carriage is in the position nearest to the drawing-rolls the supplemental carrier is lowered to the amount to safely allow for the entering of the bottom-forming end of the tucked-paper tube between the carrier and the tucker-plate. The front clip B and the side clips C are then caused to close, the former holding the lower ply of the tube and the latter entering into and between the tucks and holding the lower plies of the tucks. Simultaneously the side nippers 83 enter the tucks and hold the upper plies of the upper tucks to the vibrating tucker-plate. The blank being held by the instrumentalities just described, the carriage 133 is rocked forward, the supplemental carrier A is caused to be lowered, and the tucker-plate caused to be vibrated by its respective cams through the positions as shown in Figs. 29 and 30, thus unfolding the tucks and producing the inside triangular folds and defining the primary transverse folding-line across the tubular blank and converting the tucked-paper tube into the well-known diamond form, which may then be drawn from the carriage and the end flaps folded by any of the well-known mechanisms.

The operation of the machine is as follows: The paper is taken from the roll 22 at the base of the frame, folded around the former 21, and converted into a continuous tucked-paper tube, which is guided into the bite of the drawing-rolls 42 and 46, under the serrated knife 51, and between the rolls 32 and 36, and as the striker revolves across the path of the tube it forces the tube against the serrated edge of the knife 51 and severs the blank therefrom at each revolution. The drawing-rolls are so geared with relation to the revolution of the striker as to feed through a suitable length for each rotation thereof. The bottom-forming end of the tube is then guided into the bottom-forming mechanisms in such a manner that the same enters between the tucker-plate 75, provided with the bevel-edged side nippers 83, and the supplemental carrier 56, which is pivotally mounted to the cylinder 55 and which is provided with the front clip 61 and the two oppositely-disposed

bevel-edged side clips 67. The tube as it arrives at about the position as shown in Figs. 5 and 6 is clasped by the front clip 61, the same being carried by the cylinder, and by virtue of the cam 64 the side clips 67 are then caused to close by means of the cam 72, thus holding the lower part of the tube to the supplemental carrier. Simultaneously the side nippers 83 are caused to close by means of cam-groove 90, and as the cylinder continues to rotate the supplemental carrier is swung away from the tucker-plate and the tucker-plate vibrated at the same time, the folding edge forming the characteristic primary transverse folding-line across the tubular blank and unfolding and forming the well-known inside triangular folds, passing from the positions as shown in Figs. 5 to 16, inclusive, and converting the tubular blank into the diamond form. The paste is then applied thereto from the paste-box 104, the roll 103, quadrant 102, and the paste-sector 95, to which are attached the creaser-blades 106 and 107, which engage the transverse creaser-grooves 108 and 109, respectively, the creaser-blade 107 and the creaser-groove 108 coöperating to make a crease across the diamond blank and thereby to somewhat raise the rear end of the diamond, which is immediately backed up by the plicators 110, carried by the supplemental carrier and engaging the cam 114, as shown in Figs. 17 and 18. The motion of the plicators continues until the flap is completely turned forward, and meanwhile the front clip 61 has been opened, the spring of the paper causing the front flap to be thrown over the flap-bar 124 and against the folder-blade 115. Each plicator is then returned to its normal position and the folder-blade then caused to move downward at a rate to remain with its folding edge in the creased line formed by the creaser-blade 106 and the groove 108 until the bag is delivered into the bite of the delivery-rolls and carried away by the bands 125 and 126 into a drier to be dried, and afterward bound and packed for sale and use.

This machine is distinguished from all prior machines for making square-bottom paper bags in many respects, one of which consists in the new mode of operation by which it folds the diamond form of the paper. That new mode of operation includes carrying both plies of the paper tube at the primary transverse folding-line, which is defined by the lower edge of the tucker-plate, forward under the secondary transverse folding-line, across the upper ply of the paper tube, which is afterward defined by the creaser-blade 107, and the creaser-groove 108, instead of carrying the secondary transverse folding-line backward over the primary transverse folding-line. In this new mode of operation the carrier oscillates inward from its normal position while it is coöperating with the tucker-plate to make the primary transverse fold and the inwardly-inclined triangular folds during the first half of that making and oscillates outward to its normal position while it is thus coöperating during the last half of that making, whereas in every prior machine the folding-bed which most nearly corresponds with the carrier of this machine does not thus oscillate while those folds are being made, but simply holds the lower ply of the paper tube against all oscillation while the upper ply is being turned over backward upon itself. It results from this new mode of operation that all the devices which act upon the paper to make the primary transverse fold and the inwardly-inclined triangular folds are moving forward while they are making them, whereas in the prior machines some devices which help to make those folds are moving backward at that time, and this new result is promotive of speed and also of some of the other superiorities which characterize this machine.

I claim as my invention—

1. The combination of a conveyer; an oscillating carrier having its forward end pivoted to the conveyer; mechanism to oscillate the carrier upon its pivot, and devices to coöperate with the carrier, during both parts of its oscillation, and during its forward movement with the conveyer, to unfold a paper tube, and to refold it into a paper-bag blank.

2. The combination of a conveyer; an oscillating carrier, pivoted to the conveyer; mechanism to oscillate the carrier upon its pivot, and a tucker-plate vibrating upon trunnions not substantially on a line with its defining edge; all coöperating during the forward movement of the conveyer, and during both parts of the oscillation of the carrier, and during the vibration of the tucker-plate, to unfold a paper tube, and to refold it into a paper-bag blank.

3. The combination of a conveyer; an oscillating carrier, pivoted to the conveyer; mechanism to oscillate the carrier upon its pivot, devices to hold the lower ply of a tucked-paper tube upon the face of the carrier; a tucker-plate vibrating upon trunnions not substantially on the line with its defining edge; and devices to hold the upper ply of a tucked-paper tube, against the face of the tucker-plate, between the line of its trunnions, and the line of its defining edge; all coöperating, during the forward movement of the conveyer, and during both parts of the oscillation of the carrier, and during the forward vibration of the tucker-plate to unfold a tucked-paper tube, and to refold it into a paper-bag blank, having inwardly-inclined triangular folds.

4. The combination of a rotating conveyer; two or more oscillating carriers, pivoted to the conveyer; mechanism to oscillate each carrier upon its pivot, and one set of mechanism placed and adjusted to coöperate with each of the carriers successively, during the forward movement of the conveyer, and during both parts of the oscillation of that carrier, to unfold a paper tube, and to refold it into a paper-bag blank.

5. The combination of a rotating conveyer; two or more oscillating carriers, pivoted to the conveyer; mechanism to oscillate each carrier upon its pivot; devices to hold the lower ply of a tucked-paper tube upon the face of each carrier; a tucker-plate, vibrating upon trunnions not substantially on the line with its defining edge; and devices to hold the upper ply of a tucked-paper tube, against the face of the tucker-plate, between the line of its trunnions, and the line of its defining edge; all coöperating during the forward movement of the conveyer, and during both parts of the oscillation of each carrier, and during the forward vibration of the tucker-plate, to unfold a tucked-paper tube, and to refold it into a paper-bag blank, having inwardly-inclined triangular folds.

6. In a paper-bag machine the combination of the cylinder provided with a mutilation, the carrier pivotally mounted on that cylinder and means for imparting thereto an oscillatory motion by a cam and adapted to swing the same into the mutilation of the cylinder, the folding-surface of that carrier forming the continuation of the folding-surface of the cylinder, when the carrier is in its normal position, and devices coöperating with that carrier to effect the unfolding of the tucked-paper tube.

7. In a paper-bag machine the combination of the cylinder provided with a mutilation, the carrier pivotally mounted on that cylinder and means for imparting thereto an oscillatory motion by a cam and adapted to swing the same into the mutilation of the cylinder, the folding-surface of that carrier forming the continuation of the folding-surface of the cylinder when the carrier is in its normal position, and being provided with the front clip and the two oppositely-disposed side clips and devices coöperating with the carrier to effect the unfolding of the tucked-paper tube substantially as described.

8. In a paper-bag machine, the combination of a conveyer; an oscillating carrier pivoted thereto, and provided with means to hold the lower part of the tubular blank thereto; the tucker-plate provided with means to hold the upper part of the tubular blank; the parts combined and operating to distend and unfold the tucked-paper tube, while the carrier is oscillated, and operating means to cause the tucker-plate to vibrate and define the primary transverse folding-line across the blank; the whole operating to convert the blank into the diamond form, substantially as described, while the blank is carried onward by the conveyer.

9. In a paper-bag machine, the combination of a conveyer; an oscillating carrier pivoted thereto, operating means to cause the same to oscillate and means to hold the lower part of the tubular blank thereto; the tucker-plate trunnioned in the uprights and provided with the side nippers, operating means to cause the tucker-plate to vibrate, and means to close the nippers on the tucker-plate, all parts combined and operating to distend and unfold the tucked-paper tube and form the inside triangular folds while the carrier oscillates and the tucker-plate defines the primary transverse folding-line across the blank; the whole operating to convert the blank into the diamond form, while the blank is carried onward by the conveyer substantially as described.

10. In a paper-bag machine the combination of the conveyer, the carrier pivotally mounted thereon, operating means to cause the same to be oscillated, and the front clip and the two oppositely-disposed side clips arranged to swing down upon the lower part of the tubular blank and hold the same to the carrier, the tucker-plate trunnioned in the uprights and provided with the side nippers, operating means to vibrate the tucker-plate and operating means to cause the side nippers to swing down onto the tucker-plate and hold the upper part of the tubular blank, all parts combined and operating to distend and unfold the tubular blank to form the inside triangular folds while the tucker-plate defines the primary transverse folding-line across the blank, the whole operating to convert the tucked-paper tube into the diamond form, while the same is carried onward by the conveyer substantially as described.

11. In a paper-bag machine the combination of the cylinder provided with a mutilation, the carrier pivotally mounted on the cylinder, means for imparting thereto an oscillatory motion and a front clip and the two oppositely-disposed side clips, the tucker-plate trunnioned in the uprights and provided with the side nippers, and operating means to vibrate the tucker-plate so that the folding edge travels with the combined movement of the cylinder and the carrier in order to define the primary transverse folding-line substantially as described.

12. In a paper-bag machine the combination of the cylinder provided with a mutilation, the carrier pivotally mounted on the cylinder, means for imparting thereto an oscillatory motion and a front clip and the two oppositely-disposed side clips arranged to swing down upon the lower part of the tubular blank and hold the same to the carrier, the tucker-plate trunnioned in the uprights 23 and 24 and provided with the side nippers, and operating means to vibrate the tucker-plate so that the folding edge travels with the combined movement of the rotating cylinder and the oscillating carrier to define the primary transverse folding-line and unfold the tucked-paper tube into the diamond form while the blank is being carried onward substantially as described.

13. A folding-bed adapted to support one side of a paper-bag blank, a tucker-plate having a folding edge adapted to define the transverse folding-line across the blank on the other side of the blank and provided with trunnions, slides adapted to reciprocate on said trun-

nious, nippers pivotally mounted on the slides, the annular collar surrounding the slides, and operating means to carry the slides with the nippers laterally.

14. A carrier provided with means adapted to support and hold one side of a paper-bag blank, a tucker-plate having a folding edge adapted to define the transverse folding-line across the blank on the other side thereof and provided with trunnions mounted in the uprights of the machine with means to cause the same to be vibrated, the slides adapted to slide on the trunnions and carrying the nippers pivotally mounted thereon, the springs 92 for holding the nippers in the normally open position, the annular collar surrounding the slides and operating means for carrying the slides with the nippers laterally substantially as described.

15. A carrier provided with means to support and hold one side of a paper-bag blank a tucker-plate having a folding edge adapted to define a transverse folding-line across the blank on the other side thereof and provided with trunnions mounted in the uprights of the machine with means to cause the same to be vibrated, the slides adapted to slide on the trunnions and carrying the nippers pivotally mounted thereon, with the projection 83^b engaging the spline in the trunnions, means to cause the slides to oscillate, and means to cause the same to close and press on the tucker-plate all combined and operating substantially as described.

16. A folding-bed adapted to hold one side of a paper-bag blank, a tucker-plate having a folding edge adapted to define the transverse folding-line across the blank on the other side thereof, and provided with trunnions mounted in the uprights of the machine and means to cause the same to vibrate, the slides adapted to slide on the trunnions and carrying the nippers pivotally mounted thereon and the springs 92 for holding the nippers in the normally open position, projections 83^b engaging the splines of the trunnions and causing the same to vibrate with the trunnions and the tucker-plate; substantially as described.

17. A folding-bed adapted to hold one side of a paper-bag blank, a tucker-plate adapted to define the primary transverse folding-line across the blank on the other side thereof and provided with trunnions mounted in the uprights of the machine, the distance from the center-line of the trunnions to the folding edge of the tucker-plate being of substantially the depth of the tucks of the tube, operating means to cause the same to be vibrated, the slides adapted to oscillate on the trunnions and vibrate with the same and carrying pivotally mounted the bevel-edged side nippers, springs 92, to open the nippers when the projection 83^b is disengaged from the end of the spline, all combined and operating substantially as described.

18. In a paper-bag machine the combination of the conveyer, the carrier pivotally connected thereto, operating means consisting of a cam to cause the same to be oscillated, the plicators pivotally mounted on oppositely-disposed sides of the carriers and operating means consisting of a cam to cause the same to sweep over the traveling folding-bed of the carrier as the same is carried along by the conveyer.

19. In a paper-bag machine the combination of a cylinder, provided with a mutilation, the carrier pivotally mounted to the cylinder and means for imparting thereto an oscillatory motion, the plicators pivotally mounted in oppositely-disposed sides of the carrier, and operating means consisting of cam to cause the same to sweep over the surface of the carriers directly back of the creaser-blade substantially as described.

20. In a paper-bag machine the combination of a cylinder, provided with a mutilation, the carrier pivotally mounted to the cylinder and means for imparting thereto an oscillatory motion, the plicators pivotally mounted in oppositely-disposed sides of the carrier, and operating means consisting of a cam to cause the same to sweep over the surface of the carriers directly back of the creaser-blade coacting with the transverse creaser-groove 109 as the carrier is propelled onward by the cylinder.

EDWARD E. CLAUSSEN.

Witnesses:
J. P. WAKEFIELD,
H. C. MARQUARDT.

No. 635,090. Patented Oct. 17, 1899.

E. E. CLAUSSEN & G. MORTSON.

PAPER BAG MACHINE.

(Application filed June 17, 1899.)

(No Model.) 8 Sheets—Sheet 1.

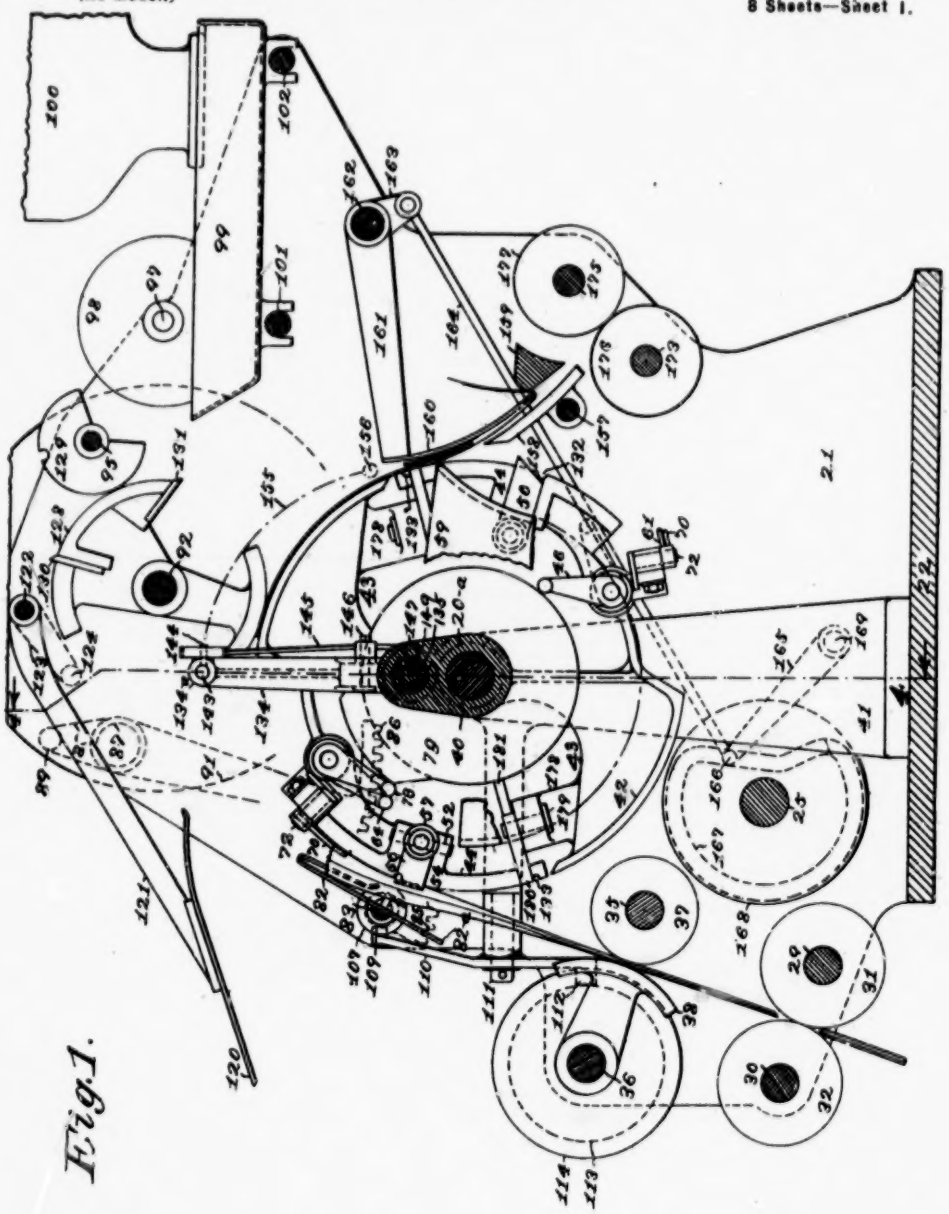

Fig. 1.

Witnesses:
J. S. Ellsworth.
C. F. Smith

Inventors:
Edward E. Claussen.
George Mortson.
By Ed E. Claussen
Atty

THE HOWSON PETERS CO., WASHINGTON, D. C.

No. 635,090. Patented Oct. 17, 1899.

E. E. CLAUSSEN & G. MORTSON.

PAPER BAG MACHINE.

(Application filed June 17, 1899.)

(No Model.) 8 Sheets—Sheet 2.

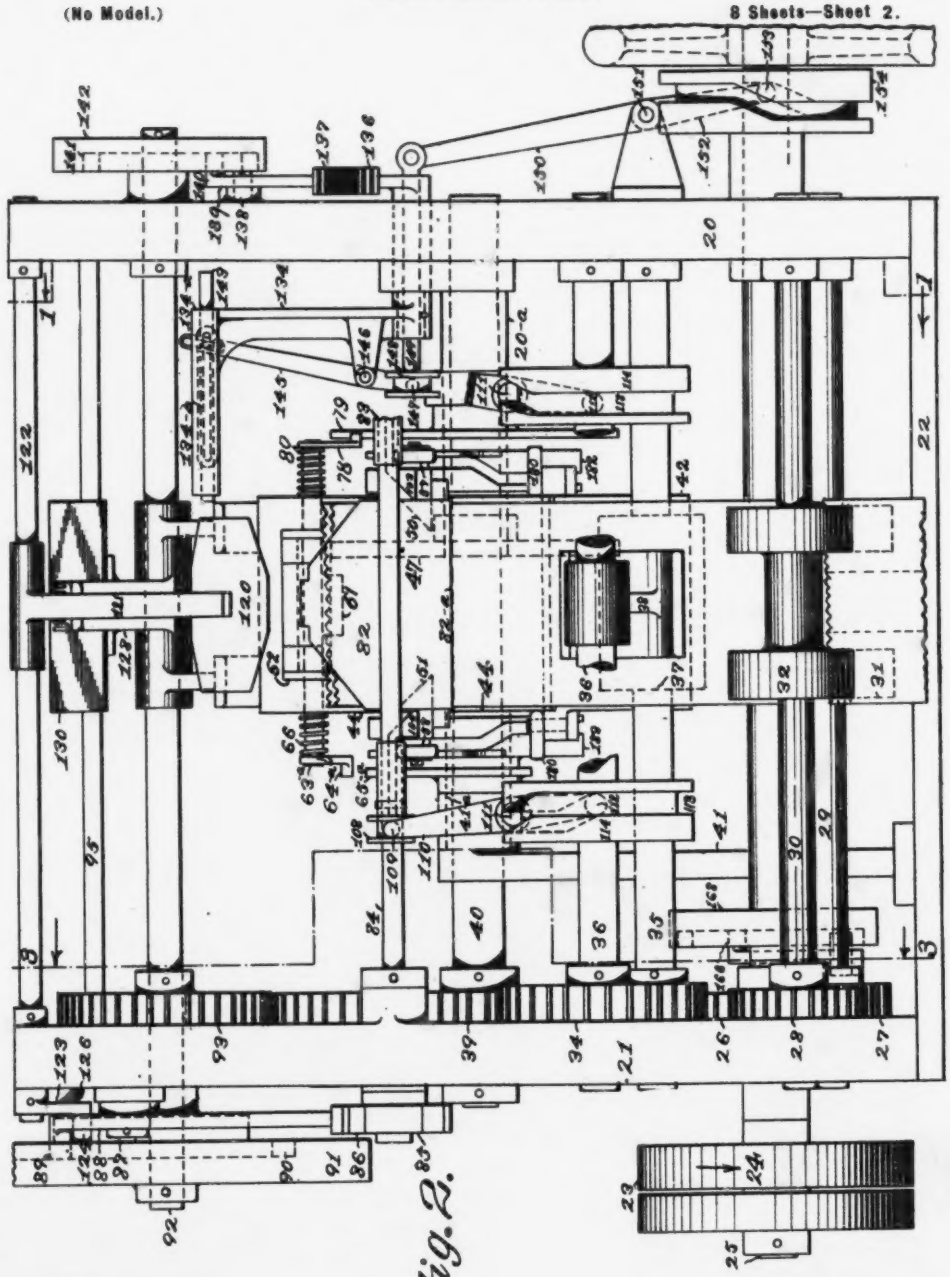

Fig. 2.

Witnesses:
J. S. Ellsworth
C. F. Smith

Inventors:
Edward E. Claussen
George Mortson
Atty.
By Ed. E. Claussen

THE NORRIS PETERS CO., WASHINGTON, D. C.

No. 635,090. Patented Oct. 17, 1899.

E. E. CLAUSSEN & G. MORTSON.

PAPER BAG MACHINE.

(Application filed June 17, 1899.)

(No Model.) 8 Sheets—Sheet 3.

Fig. 3.

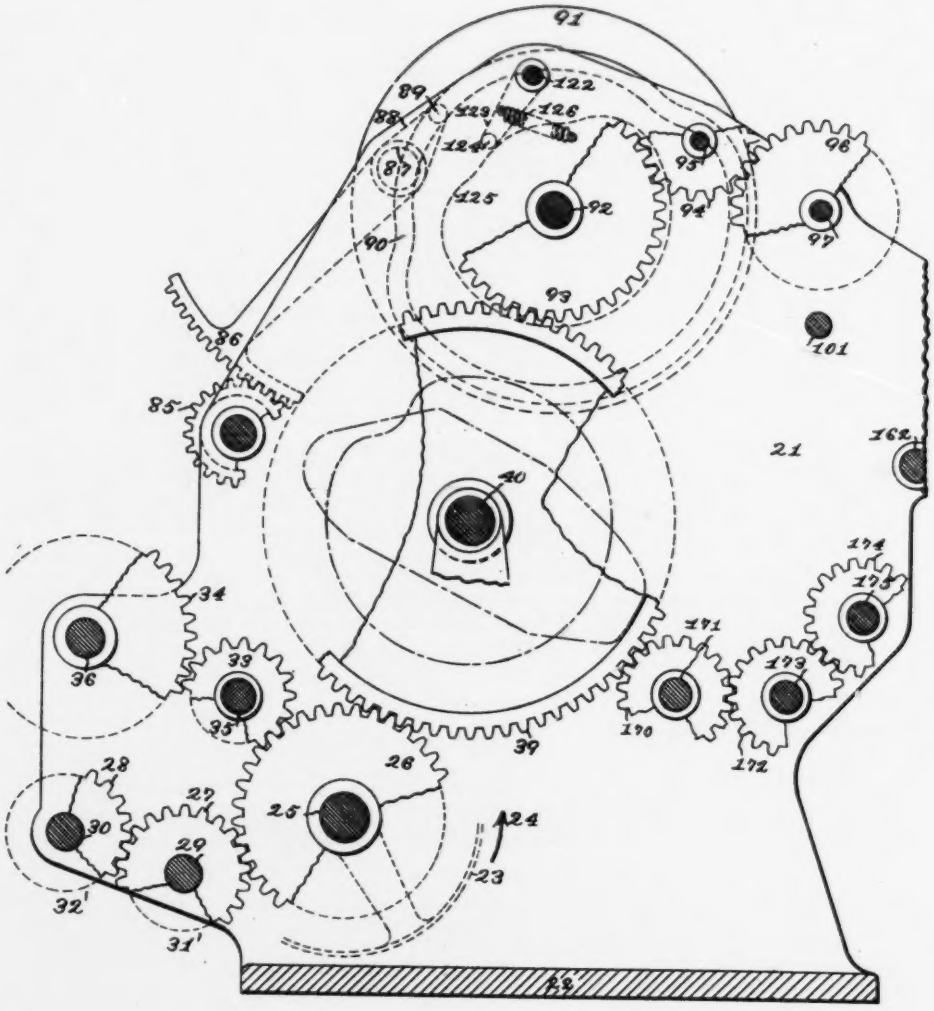

Witnesses:
J. L. Ellsworth.
C. F. Smith

Inventors:
Edward E. Claussen
George Mortson.
by Ed. E. Claussen
Atty

THE NORRIS PETERS CO., WASHINGTON, D. C.

No. 635,090. Patented Oct. 17, 1899.

E. E. CLAUSSEN & G. MORTSON.

PAPER BAG MACHINE.

(Application filed June 17, 1899.)

(No Model.) 8 Sheets—Sheet 4.

Fig. 4.

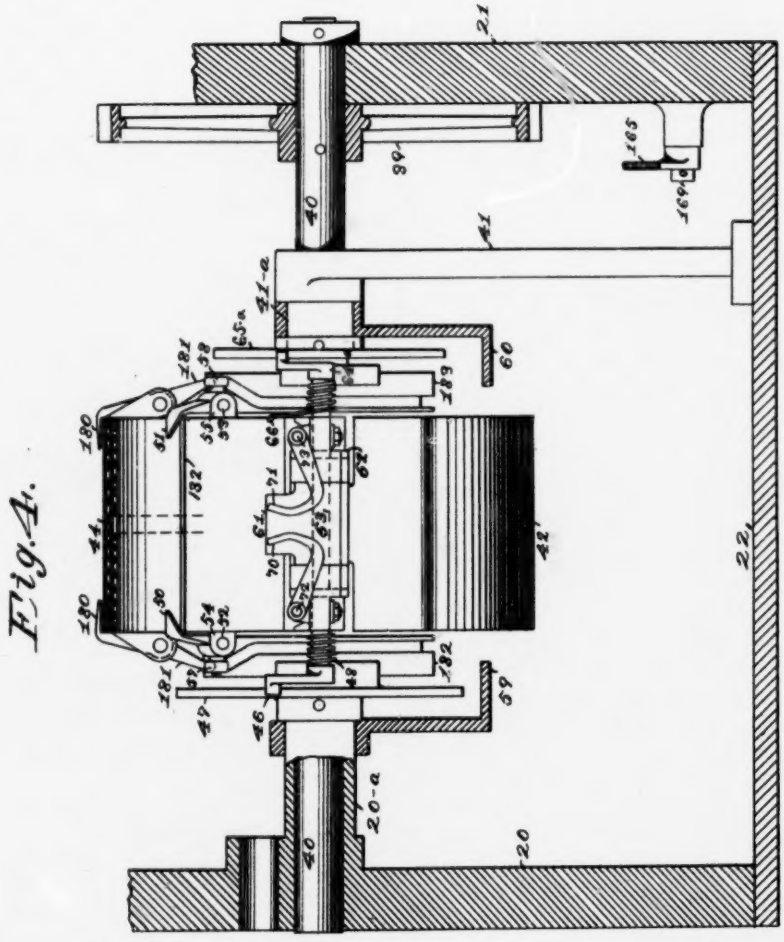

Witnesses:
J. L. Ellsworth.
C. F. Smith

Inventors:
Edward E. Claussen.
George Mortson.
By Ed. E. Claussen
Atty.

THE NORRIS PETERS CO., WASHINGTON, D. C.

No. 635,090. Patented Oct. 17, 1899.

E. E. CLAUSSEN & G. MORTSON.

PAPER BAG MACHINE.

(Application filed June 17, 1899.)

(No Model.) 8 Sheets—Sheet 5.

Fig. 6.

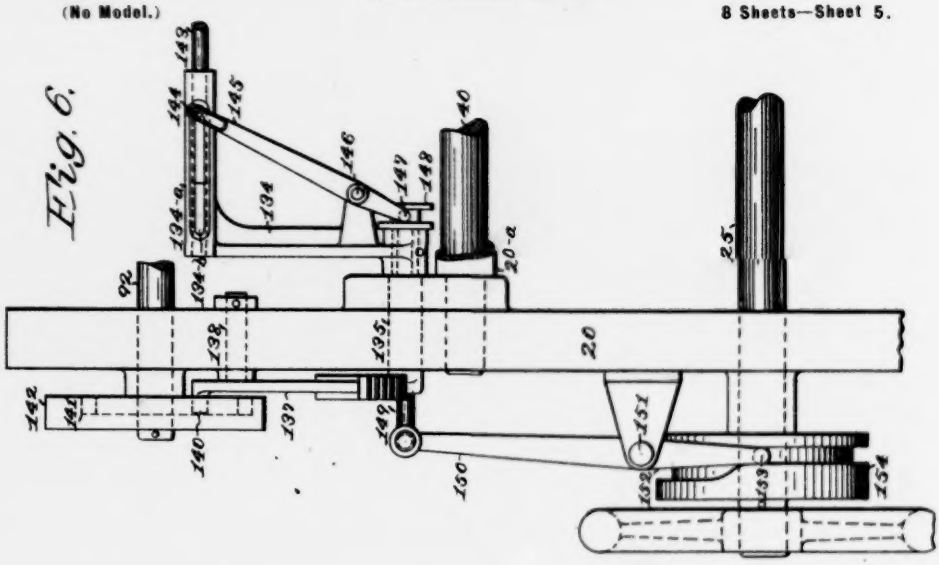

Fig. 5.

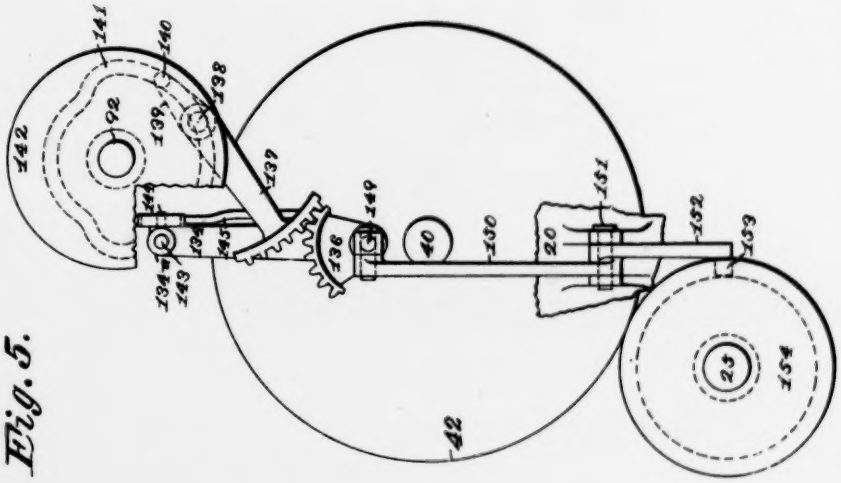

Witnesses:

J. L. Ellsworth

C. F. Smith

Inventors:

Edward E. Claussen.

George Mortson, Jr.

by Edw. E. Claussen.

THE NORRIS PETERS CO., WASHINGTON, D. C.

No. 635,090. Patented Oct. 17, 1899.

E. E. CLAUSSEN & G. MORTSON.

PAPER BAG MACHINE.

(Application filed June 17, 1899.)

(No Model.) 8 Sheets—Sheet 6.

Fig. 7.

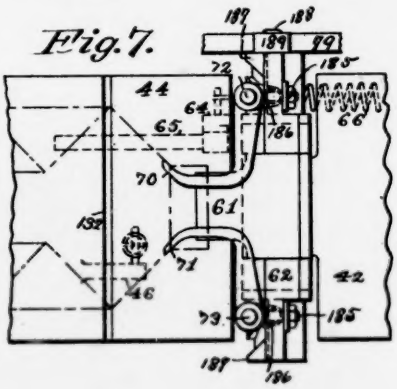

Fig. 8.

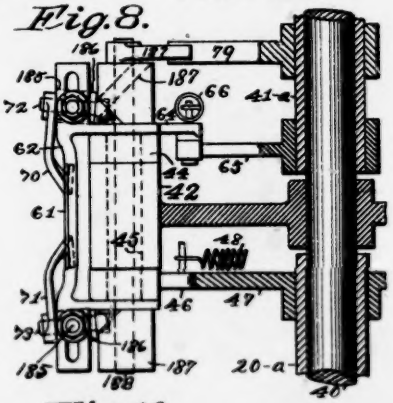

Fig. 9.

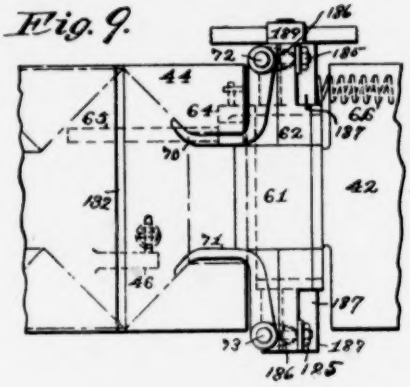

Fig. 10.

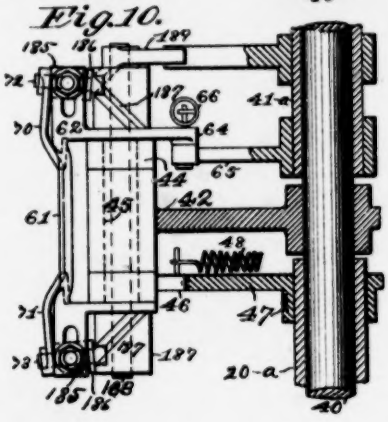

Fig. 11.

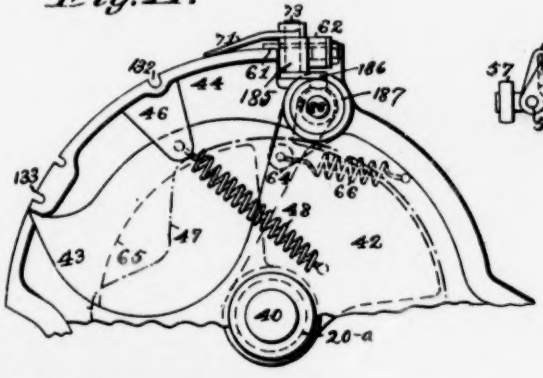

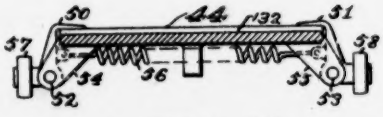

Fig. 17.

Witnesses:
J. S. Ellsworth
C. F. Smith

Inventors:
Edward E. Claussen
George Mortson
Atty.
by Ed. E. Claussen

THE NORRIS PETERS CO., WASHINGTON, D. C.

No. 635,090. Patented Oct. 17, 1899.

E. E. CLAUSSEN & G. MORTSON.

PAPER BAG MACHINE.

(Application filed June 17, 1899.)

(No Model.) 8 Sheets—Sheet 7.

Fig. 12.

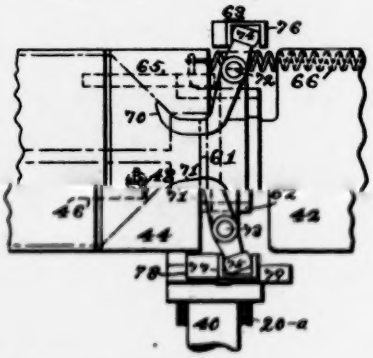

Fig. 13.

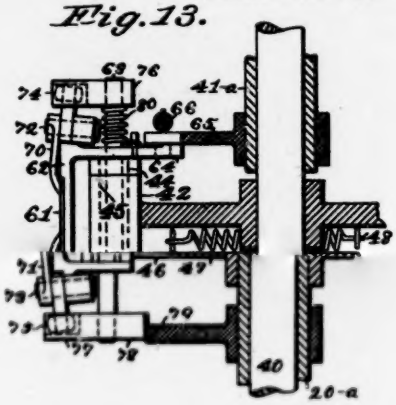

Fig. 14.

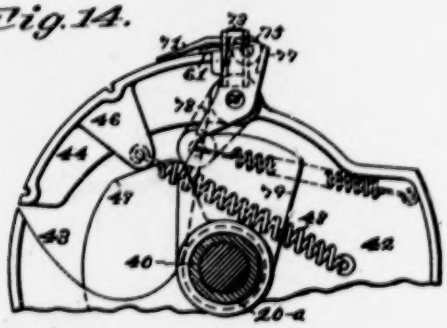

Fig. 15.

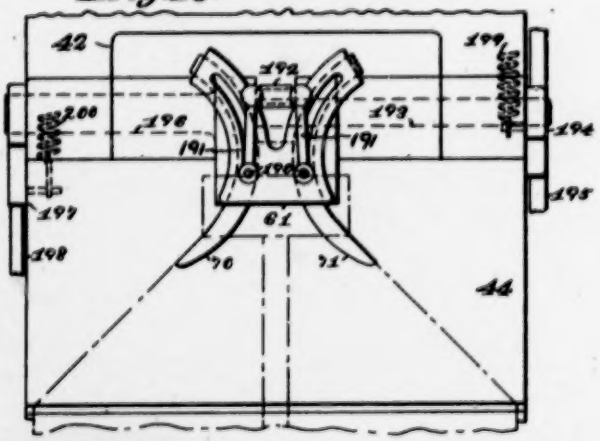

Fig. 16.

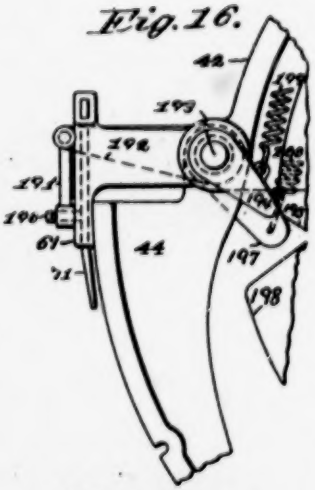

Witnesses:
J. L. Ellsworth.
C. F. Smith.

Inventors:
Edward E. Claussen
George Mortson
by E. E. Claussen
Atty.

THE NORRIS PETERS CO., WASHINGTON, D. C.

No. 635,090. Patented Oct. 17, 1899.

E. E. CLAUSSEN & G. MORTSON.

PAPER BAG MACHINE.

(Application filed June 17, 1899.)

(No Model.) 8 Sheets—Sheet 8.

Fig. 18.

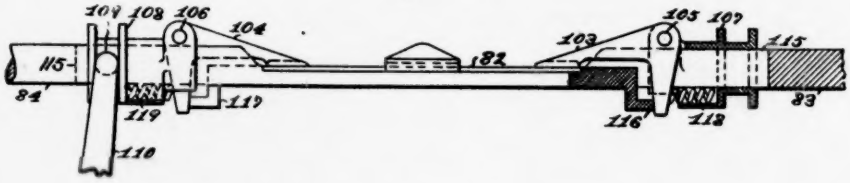

Fig. 19.

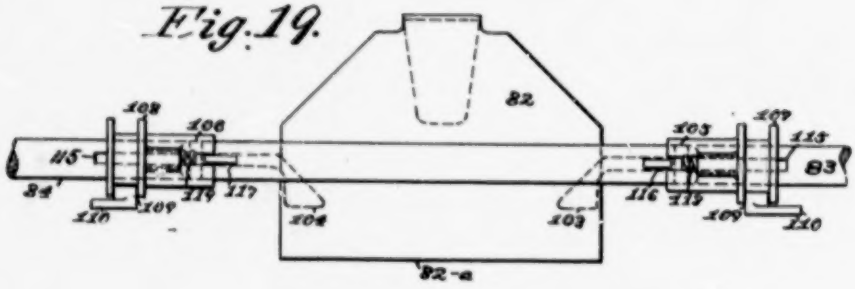

Witnesses:
J. L. Ellsworth.
C. F. Smith

Inventors:
Edward E. Claussen
George Mortson
by Ed. E. Claussen, Atty.

UNITED STATES PATENT OFFICE.

EDWARD E. CLAUSSEN AND GEORGE MORTSON, OF HARTFORD, CONNECTICUT.

PAPER-BAG MACHINE.

SPECIFICATION forming part of Letters Patent No. 635,090, dated October 17, 1899.

Application filed June 17, 1899. Serial No. 720,926. (No model.)

To all whom it may concern.

Be it known that we, EDWARD E. CLAUSSEN and GEORGE MORTSON, citizens of the United States, residing at Hartford, in the county of Hartford and State of Connecticut, have invented certain new and useful Improvements in Paper-Bag Machines, of which the following is a full, clear, and exact specification.

This improvement is particularly applicable to such paper-bag machines as that shown in Letters Patent granted to Edward E. Claussen, No. 598,497, patented February 8, 1898, and also applicable to such a machine as shown in Letters Patent granted to George Mortson, No. 614,123, dated November 15, 1898; and it consists, principally, in improved mechanism for aiding the formation of the diamond when the tucked paper blank is unfolded and refolded into the diamond form.

One object of this invention is to provide a mechanism whereby the leading end of the diamond is formed at an exact predetermined position into accurate proportions, as it is obvious that any distortion or irregular formation will rapidly multiply to such an extent as to make the bag useless and perhaps stop the machine entirely.

Another object of our invention is to provide means, consisting of the ironing-plate, to press and flatten the bag by the oscillating ironing-plate upon the folding-bed and the vibrating tucker-plate.

Another object of this invention is to provide means whereby the rear flap is folded over upon the bag-bottom by a positive mechanism and at a rapid speed.

In our present invention the preferred embodiment herein shown and described in a paper-bag machine comprises in part a suitable bed or framework for supporting the various operative parts of the machine, means for drawing the tucked-paper tube into the machine, a vibrating tucker-plate provided with bevel-edged side nippers trunnioned in stationary frames and arranged to vibrate above the tubular blank in such a manner that as the bottom-forming end of the tube passes along beneath the same the bevel-edged side nippers swing into the tucks of the tube and clasp and hold firmly the upper ply of the tube to the tucker-plate. Coacting with the tucker-plate is the supplemental carrier arranged and operating below the tubular blank, which is pivoted to the conveyer and provided with a pair of bevel-edged side clips adapted to swing into the tucks of the tube and hold the lower ply of the blank to that carrier, a front clip adapted to hold the front end of the bag to the carrier, means for starting and forming at predetermined points the front end of the diamond form, consisting of a diamond finger mounted on the front clip and adapted to swing into the bottom-forming end of the blank during the unfolding of the same and the refolding into the diamond form and adapted to swing out of operative adjustment as soon as the diamond is completed, means for flattening the diamond form on the folding-bed and the tucker-plate, means for turning the first fold over on the bag-bottom, consisting of a finger adapted to be thrust crosswise of the folding-bed and behind the flap and to swing over the surface of the cylinder, whereby the rear flap is turned over on the bag-bottom and then returned to its normal position, and a folder-blade to fold over the second flap, all as will be hereinafter described, and more particularly pointed out in the claims.

The reference-numerals herein used indicate, respectively, the same parts in the different figures of the drawings. The arrows indicate, without further description, the direction of movement of parts.

In the accompanying drawings the various instrumentalities are shown in their most advantageous position, irrespective of the relative position which these parts may have to their respective cam-grooves, and the same is true of all parts hereinafter mentioned, it being considered sufficient for the purpose of this description to assume that the cams are properly cut to effect the various operations required at the proper times and to the required extent.

The machine as herein shown and described employs two supplemental carriers oscillating upon the cylinder; but it is obvious that one supplemental carrier or more than two

can be arranged for, or it is equally well adapted to the machine described in the previously-cited Patent No. 614,123.

The invention will best be understood as described in connection with the drawings, in which it is illustrated, and in which—

Figure 1 is a right-hand side elevation of the machine, taken on the line 1 1 of Fig. 2 and showing the paper blank gripped by the forming mechanism and at a stage where the folding is about to begin and having all the mechanisms in the rear omitted. Fig. 2 is a front elevation of what is shown in Fig. 1. Fig. 3 is a side elevation of the machine, taken on the broken line 3 3 of Fig. 2 and representing the mechanisms which were omitted in Fig. 1. Fig. 4 is a cross-sectional rear end view of Fig. 1 on the broken line 4 4 of Fig. 1 and is shown partly in section and partly in full view. Figs. 5 and 6 are respectively fractional side and rear end views of the rear flap-folder mechanism. Figs. 7 and 8 are respectively plan and end views of a modified form of the diamond fingers and their operating mechanism. Figs. 9, 10, and 11 are respectively a plan, an end, and a side view of a modification of the diamond fingers and their operating mechanism, showing the same in the way they are mounted, whereby they are adapted to be adjusted to a larger size of bag. Figs. 12, 13, and 14 are respectively a plan, an end, and a side view of still another modification of the diamond fingers and their actuating mechanism. Figs. 15 and 16 are respectively a plan and a side view of the last modification of the diamond fingers in operation upon the leading end of the bag-blank which may be made in our machine. Fig. 17 represents a detail front sectional view of the side clips as they are mounted to the carriers. Figs. 18 and 19 are respectively detail plan and front views of the tucker-plate and side nippers carried thereby.

The bed of the machine may be of any suitable construction to support the paper-roll and the former, which may be of any well-known construction, to form the tucked-paper tubing, and that bed is also adapted to support on its upper surface on the right-hand side the frame 20 and on the left-hand side the frame 21, joined by the base-plate 22, and which are adapted to carry the various shafts and mechanisms.

Motion is communicated to the machine by the pulley 23 in the direction of the arrow 24, fastened upon the shaft 25, journaled crosswise in the frames 20 and 21 and which carries on the inner side of the frame 21 the gear 26, secured upon the shaft 25 and meshing into the gear 27, engaging the gear 28, fastened, respectively, on the shafts 29 and 30, placed crosswise of the machine, and also journaled in the frames 20 and 21, and those shafts respectively carry the drawing-rolls 31 and 32. The gear 26 also meshes into the gear 33 and that gear engages the gear 34, which are respectively fastened on the shafts 35 and 36. The shafts 35 and 36 respectively carry the conveyer-rolls 37 and the conveyer-sector 38. By the means just described the previously-severed bag-blank is drawn into the machine and delivered to the bottom-forming mechanisms to perform their respective functions, as will now be described.

On the inner side of the frame 21 and fastened on the shaft 25, as previously stated, is the gear 26, which meshes into the cylinder-gear 39, fastened to the cylinder-shaft 40, which is journaled crosswise to the machine in the frames 20 and 21 and the bracket 41, the latter secured to the base-plate 22. The frame 20 has a projecting bearing 20^a and the bracket 41 has a projecting bearing 41^a, upon which the stationary cams are mounted for operating the various mechanisms, as will be described later. The cylinder-shaft 40 has fastened thereto the mutilated cylinder 42, having the mutilations or sector-like sections 43, into which the supplemental carriers 44 are permitted to oscillate, and the tops or supporting-surfaces of the supplemental carriers form the supplements of the mutilations of the cylinder. The normal position of the supplemental carriers is that position where the tops or folding-surfaces of the carriers form the continuation of the cylinder. In the drawings two of these supplemental carriers are shown (indicated by the same numeral 44) pivoted to the cylinder by the bushings 45. A downward-projecting arm 46 of the carrier 44 is adapted to engage the stationary cam 47, which is mounted on the inwardly-projecting bearing 20^a of the frame 20 and which is held in engagement with that cam by the spring 48. The cam 47 is substantially of such shape that as the supplemental carrier is caused to be carried around by the rotation of the cylinder the carrier is oscillated toward the center of the cylinder and immediately returned to its normal position. The supplemental carriers are provided with two pairs of bevel-edged side clips 50 and 51, pivotally mounted on the shafts 52 and 53, supported in bosses 54 and 55, which project downward and on either side of and beneath the folding surface of the supplemental carriers. The side clips 50 and 51 are held in a closed position upon the surface of the carrier by means of the spring 56 and in an open position by means of the rolls 57 and 58 acting upon the inner surfaces of the cams 59 and 60, which are respectively mounted on the stationary bearings 20^a and 41^a of the frame 20 and the bracket 41. The supplemental carrier is also provided with the narrow front clip 61, which is held on a frame 62, the general appearance of which resembles a yoke, fastened on the shaft 63. One end of the yoke is provided with an arm 64, adapted to engage the outer circumference of the cam 65, which is also mounted on the bearing 41^a of the bracket 41, the spring 66 tending to keep the clip 61 down upon the surface of the cylinder. The tim-

ing of the cam 65, which operates the front clip 61, and the timing of the cams 59 and 60, which cause to operate the side clips 50 and 51, in relation to the rotation of the cylinder and the severing of the bag-blank is such that the front clip 61 is effectively closed by the pressure of the spring as the leading end of the tube advances and holds the lower ply of the tube thereto and the side clips 50 and 51 are caused to enter between the tucks of the tube and hold the lower plies of the tucks to the upper surface of the carrier. The cam 47, which controls the oscillation of the carrier, is of such shape that at this instant the carrier is brought toward the center of the cylinder, and thereby enables the tucks of the tube to distend and to be refolded into the diamond form.

To aid and begin the formation of the diamond fold at the exact predetermined points, we have arranged the diamond fingers 70 and 71, as best shown in Figs. 12, 13, and 14, pivoted, respectively, on pivots 72 and 73 on outwardly-projecting lugs of the yoke-shaped frame 62, and those studs are also provided with cam-arms 74 and 75, provided with roller projections, which engage the grooves in the arms 76 and 77. The arm 77 has a downwardly-projecting branch 78, which engages the upper surface of the stationarily-mounted cam 79, supported on the bearing 20ª. A coil-spring 80 tends to draw the diamond fingers 70 and 71 out of engagement with the bag-blank, and therefore the diamond fingers are in their operative position during the time the branch 78 is in engagement with the cam 79.

The diamond fingers are hook-shaped and the defining or working edges of the same are substantially in such a location that when in their inner position of adjustment they form an angle of substantially forty-five degrees with the longitudinal median center line of the bag-blank, as indicated in Figs. 7, 9, 12, and 15.

In the general views, as in Figs. 1, 2, and 4, we have preferably placed the cam that operates the diamond fingers outside of the cylinder, and therefore one branch of the yoke-shaped frame 62 is securely held on a short shaft the outer end of which has connected thereto the cam-arm 64ª, engaging the cam 65ª, which is mounted on the bearing 41ª.

Above the paper-bag blank is mounted the tucker-plate 82 in trunnions 83 and 84, supported in the stationary frames 20 and 21 and capable of being vibrated by means of the pinion-sector 85, which is located on the outside of the frame 21 and securely fastened to the trunnion 84, meshing into the sector 86, which is pivoted on the stud 87, carrying the upward-extending arm 88, having a projection 89 engaging a cam-groove 90 of the cam 91, which is held on the shaft 92, and that shaft is journaled for rotation in the frames 20 and 21. A rotary motion is communicated to the shaft 92 by the gear 93, which meshes into the cylinder-gear 39, and that gear also meshes into the gear 94, which is held on the shaft 95 and journaled in the frames 20 and 21. The gear 94 also meshes into the gear 96, fastened on the shaft 97, which supports the paste-roll 98, revolving in the paste-box 99 and which receives the paste from the bottle 100. The paste-box 99 is properly supported in studs 101 and 102, which project inwardly from the frame 21.

The vibrating tucker-plate is provided with two oppositely-disposed bevel-edged side nippers 103 and 104, pivotally mounted on pivots 105 and 106 in the sleeves 107 and 108, which are adapted to receive a laterally-reciprocating motion by means of the grooved flanges on the sleeves 107 and 108, which are engaged by projections 109 of the arms 110, pivoted on the stud 111, the lower ends of which are provided with the projections 112 engaging grooves 113 in the cams 114. The bevel-edged side nippers are bell-lever shaped and extend through slots 115 in the trunnions 83 and 84, the latter being provided with engaging abutments 116 and 117, against which the bell-lever ends of the bevel-edged side nippers engage as the sleeves 107 and 108 are brought to their inner adjustment, and whereby the bevel-edged side nippers are forced down upon the tucker-plate 82. The bevel-edged side nippers 103 and 104 are thrown in open adjustment by means of the springs 118 and 119, resting in recesses formed in the sleeves when the sleeves are thrust laterally outward. The inward motion of the arms 110 thus carries the nippers in between the tucks of the tube and also closes and presses the nippers on the tucker-plate, as clearly illustrated in Figs. 18 and 19. The center line of the trunnions 83 and 84 coincides with a line that passes through the two intersecting points formed by the edges of the tube and the forty-five-degree edges of the nippers. The distance from the center line of the trunnions to the folding edge 82ª of the tucker-plate 82 is substantially equal to the depth of the tucks, and that folding edge serves to define the primary transverse folding-line across the tubular blank as that tucker-plate is vibrated, and the tubular blank is carried onward by the rotation of the cylinder. The timing of the cam-grooves 113, that effect the inward motion of the side nippers, and the timing of the cam-groove 90, which causes to vibrate the tucker-plate 82, is in relation to the rotation of the cylinder and the supplemental carriers carried thereby, with its clips, such that as the bottom-forming end of the tube enters the folding mechanism the tube is gripped by the grippers to the supplemental carriers and simultaneously the nippers enter the tucks and hold the upper plies of the tucks to the tucker-plate. The supplemental carrier as it is carried along by the cylinder is then caused to swing away from the tucker-plate and simultaneously the tucker-plate is caused to vibrate at a rate of speed equal to the combined

movement of the carrier and the rotation of the cylinder, and in this manner the tucks of the tube are distended and unfolded into the well-known inside triangular folds and the folding edge 82ª of the tucker-plate defines the primary transverse folding-line across the tube and converts the tubular blank into the diamond form.

As the supplemental carrier rocks from its lowest position back to the normal position the formation of the diamond is then practically completed; but it is pressed into its final proportions by the ironing-plate 120, as will now be described. The ironing-plate 120 is securely held on the arm 121, which is supported by the cross-shaft 122, journaled in and crosswise to the frames 20 and 21, and which carries on the outside of the frame 21 the cam-arm 123, provided with the projection 124, which engages the face of the cam 125. The spring 126 has one end fastened to the cam-arm 123 and the other end secured to the frame 21, and thereby holds the projection 124 against the face of the cam 125, and the timing of that cam is such that when the diamond form is completed by the folding mechanism the ironing-plate 120 is brought downward and presses and flattens the diamond-formed blank into its final proportions upon the carrier and the tucker-plate. After the diamond form is completed the diamond fingers 70 and 71 are withdrawn therefrom and the paste is applied by the paste-sector 128, mounted on the shaft 92, from the paste-segment 129, held on the shaft 95, which has received the paste from the paste-roll 98, which revolves in the paste-box 99.

The gears 93, 94, and 96 are so geared in relation to the cylinder-gear 39 that the face of the paste-sector is presented to the cylinder twice to each revolution of the cylinder, and in this manner the paste is deposited upon each diamond-formed blank as it passes under the paste-sector.

The folding of the rear and front flap is accomplished as follows: The paste-sector 128 has fastened thereto two creaser-blades 130 and 131 at a distance apart measured on the circumference of the paste-sector equal to twice the depth of the tucks, which distance also corresponds with the distance between the transverse creaser-grooves 132 and 133, which are grooved crosswise in the supplemental carriers, the purpose of which we will describe later in connection with the flap-folding mechanism, which we will now describe. Mounted in the frame 20 above the cylinder-shaft is the rear flap-folder arm 134, (best shown in Figs. 5 and 6,) which is mounted on the sleeve 135, carrying on the outer side the sector-pinion 136, meshing into the sector 137, pivoted on the shaft 138, which is supported in the frame 20, and that sector has the upwardly-extending arm 139, provided with the projection 140, engaging a groove 141 in the cam 142. The rear flap-folder arm is provided on the upper side with the hub 134ª, serving as a bearing for the finger 143, which is adapted to slide longitudinally in the hub 134ª, and thereby also adapted to be placed crosswise over the surface of the cylinder. The in and outward movement of the finger 143 is accomplished by the following mechanism: The finger 143 is provided with the pin 144, projecting through a slot 134ᵇ of the hub 134ª, and that pin is engaged by the bifurcated arm 145, pivoted on the stud 146, which is supported on the arm 134. The lower end of the bifurcated lever-arm 145 is provided with a projection 147, engaging a groove in the collar 148, which is integral with the rod 149, which is adapted for longitudinal movement and mounted in the central opening of the sleeve 135. The outer end of the rod 149 is pivotally engaged to the arm 150, mounted on the stud 151, the downwardly-projecting arm 152 of which is provided with the projection 153, engaging a groove in the cam 154. By the means just described the finger 143 receives a laterally in-and-outward movement crosswise to the cylinder by means of the cam 154 and its intermediate mechanisms, and also receives a vibratory motion over the surface of the cylinder by means of the cam-groove 141 and its intermediate mechanism, the latter travel being indicated by the dash-and-dot line 155 from the position shown in Fig. 1 to the position marked 156 of Fig. 1.

The front flap is folded over by the mechanisms now to be described. Mounted in the frames 20 and 21 is the stud 157, upon which is mounted the stationary folding-plate 158, of well-known construction, and above that plate is mounted the flap-bar 159, also held in the frames 20 and 21 and of usual construction.

As a convenient means for folding over the front flap, we have shown the folder-blade 160, mounted on the arm 161, supported on the shaft 162, which carries on the inner side of the frame 21 the arm 163, which is engaged by the connecting-rod 164, and which again is jointed to the cam-arm 165, pivoted on the stud 169, and that arm carries the projection 166, engaging a groove 167 in the cam 168, which is securely fastened on the shaft 25.

The cylinder-gear 39 meshes into the gear 170, journaled on the shaft 171, and that gear engages the gear 172, securely fastened upon the shaft 173, meshing again into the gear 174, held on the shaft 175, and those shafts are journaled in the frames 20 and 21 and respectively carry the delivery-rolls 176 and 177.

The cylinder is provided with lugs 178, which carry the pivots 179, to which are fastened the retainers 180, the upper ends of which are substantially hook-shaped, as best shown in Figs. 1 and 4, and when the same are folded over the top of the carrier the lower surface thereof is close to the carrier, but does not press on the same, and they are substantially in that position where they are directly ahead of the creaser-groove 133. The lower ends of the retainers 180 have downwardly-

extending branches 181, which are adapted to engage grooves in the cams 182 and 183, which are respectively mounted on the bearings 20^a and 41^a of the frame 20 and the bracket 41.

After the diamond is completed the blank is carried onward under the paste-sector 128 and the paste delivered to the bag. The creaser-blades 130 and 131 engage, respectively, with the creaser-grooves 132 and 133, creasing the bag at substantially those positions where the flaps are to be folded over, and the creaser-blade 131 thereby causes the rear flap to be raised from the surface of the cylinder, at which time the finger 143 is thrust behind the rear flap and immediately afterward the retainers 180 are thrust into their inner position over the bottom of the bag and in front of the flap, and as the cylinder is carried onward the finger 143 is caused to be oscillated over the surface of the cylinder, thereby turning the rear flap against the retainers 180 down upon the bottom of the bag.

The cylinder is provided with a duplicate set of carriers and coöperating mechanism, as previously stated, which is not essential, but it is preferable on account of the enlargement of the cylinder thereby obtained, which allows the use of larger cams on the sides of the cylinder, whereby easier motions are obtained to operate the various mechanisms, and whereby a greater speed of the machine is effected, and it also does not require the bag to be bent around too small a circumference.

We will now describe some modifications of mechanisms that may be applied to the hook-shaped diamond fingers without departing from the spirit and scope of our invention, and the first of those modifications is represented in Figs. 7 and 8, which permits of a lateral adjustment of the diamond fingers, whereas in Figs. 9, 10, and 11 this modification is shown with the diamond fingers adjusted laterally outward to enable them to operate upon a larger size of bag. The diamond fingers 70 and 71 are pivoted in studs 72 and 73, held in bearings 185, which are laterally adjustable on the yoke-shaped frame. The shafts 72 and 73 are provided on their lower sides with cam-arms 186, which are adapted to engage spirally-cut cam-grooves in the cams 187, which are respectively cut right and left, so that any motion imparted thereto will effectively throw the diamond fingers 70 and 71 out of or into operative engagement. The cams 187 are fastened on the shaft 188, which is provided with the arm 189, engaging the cam 79, fastened on the bearing 41^a of the bracket 41..

Another modification is represented in front and side view in Figs. 15 and 16, in which the narrow portion 61 of the front clip is made thick and is provided with two circular grooves adapted to receive the semicircular diamond-fingers 70 and 71, which are provided with the studs 190 and engaged by the connecting-rod 191, jointed to the arm 192 and fastened on the shaft 193, and that shaft is provided on its outer end with the arm 194, engaging a cam 195, held on the bearing 20^a. The yoke-shaped front clip is provided on the left-hand side with the shaft 196, which has on its outer side the arm 197, engaging a cam 198, which is mounted on the stationary bearing 20^a. The spring 199 tends to keep the diamond fingers out of their operative position, whereas the cam 195 throws the same into their operative position. The springs 200 brings the front clip 61 down upon the surface of the carrier and the cam 198 tends to bring the same back out of engagement with the carriers.

The operation of the machine is as follows: The paper is taken from the roll, folded around the former, and converted into a continuous tucked-paper tube of any construction well known in the art, and guided into the bite of the drawing-rolls and severed into bag-blank lengths in any well-known manner, and the severed blanks are guided into the bite of the drawing-rolls 31 and 32, which deliver the blank to the conveyer-roll and the conveyer-sector 38. The bottom-forming end of the tube is then guided into the bottom-forming mechanism in such a manner that the same enters between the tucker-plate 82, provided with the bevel-edged side nippers 103 and 104, and the supplemental carrier 44, which is pivotally mounted to the cylinder 42, which is provided with the front clip 61, the two oppositely-disposed hook-shaped diamond fingers 70 and 71, mounted on the front clip, and the two oppositely-disposed bevel-edged side clips 50 and 51. The tube as it arrives at about the position as shown in Fig. 1 is clasped by the front clip 61, the same being carried onward by the cylinder and effectively closed upon the surface thereof by virtue of the cam 65 and the spring 66, thus holding the lower part of the tube to the carrier. Simultaneously the side clips 50 and 51 are effectively thrust between the tucks of the tube and brought to their inner closed position, and as the cylinder continues to rotate the supplemental carrier is swung away from the tucker-plate and at the same time the tucker-plate is vibrated, the folding edge forming the characteristic primary transverse folding-line across the tubular blank and unfolding and forming the well-known inside triangular folds and converting the tubular blank into the diamond form. The ironing-plate is then brought to its lower downward position, whereby the diamond is pressed into its final proportions on the carrier and the tucker-plate. The side nippers 103 and 104 are then withdrawn, and directly afterward the diamond fingers 70 and 71 are retracted and the bag-blank is carried under the paste-sector 128 to receive the paste, and to which are attached the creaser-blades 130 and 131, which respectively engage the transverse creaser-grooves 132 and 133 and crease the blank

where the edges of the completed bag are to be located and facilitate the subsequent folding operations. As the creaser-blade 131 cooperates with the creaser-groove 133 the rear end of the diamond that forms the rear flap is raised from the carrier and is immediately backed up by the finger 143, thrust behind the flap. The retainers 180 are then brought to their inner position of adjustment, and the finger 143 is then caused to be oscillated over the surface of the cylinder by means of the cam-groove 141 of the cam 142, thereby folding over the rear flap against the retainers upon the folded bottom of the blank. The front clip 61 is then caused to be opened to its extreme backward position, thereby releasing the front end of the diamond, which permits the front flap to spring outward and forward over and above the flap-bar 159 and against the folder-blade 160, and as at this point the folder-blade 160 is moving with the speed of the cylinder downward it engages the bag-blank at that position where the creaser 130 has creased the bag-blank in its coacting creaser-groove 132 until the bag-blank is delivered between the stationary folding-plate 158 and the bar 159, into the bite of the delivery-rolls 176 and 177, and the completed bag may then be carried away by any suitable bands into a drier to be dried and afterward bound and packed for sale and use.

Having thus fully described our invention, what we claim, and wish to secure by Letters Patent, is—

1. The combination of a conveyer, an oscillating carrier, having its forward end pivoted to the conveyer, mechanism to oscillate the carrier upon its pivot, the front clip pivoted to the conveyer, the diamond fingers pivoted to the front clip, and devices for cooperating with the carrier during both parts of its oscillation and during its forward movement with the conveyer, to unfold a paper tube and refold it into a paper-bag blank.

2. The combination of a conveyer, an oscillating carrier pivoted to the conveyer, mechanisms to oscillate the carrier upon its pivot, the front clip mounted on the conveyer, oppositely-disposed diamond fingers mounted on the front clip, a tucker-plate vibrating upon trunnions not substantially on a line with its defining edge, all coöperating during the forward movement of the conveyer, and during both parts of the oscillation of the carrier, and during the vibration of the tucker-plate, to unfold a paper tube and to refold it into a paper-bag blank.

3. The combination of a conveyer, an oscillating carrier pivoted to the conveyer, mechanisms to oscillate the carrier upon its pivot, devices to hold the lower ply of a tucked-paper tube upon the face of the carrier, consisting of the front clip, diamond fingers mounted on the front clip, adapted to enter the bottom-forming end of the tube, and the side clips, a tucker-plate vibrating upon trunnions, devices to hold the upper ply of a tucked-paper tube against the face of the tucker-plate between the line of its trunnions and the line of its defining edge, all coöperating during the forward movement of the conveyer and during both parts of the oscillation of the carrier, and during the forward vibration of the tucker-plate, to unfold a tucked-paper tube and to refold it into a paper-bag blank, having inwardly-inclined triangular folds.

4. A folding-bed adapted to support one side of a paper-bag blank, the front clip mounted on that folding-bed, and adapted to swing forward and clasp the leading end of the bag-blank to the folding-bed, the oppositely-disposed diamond fingers mounted on the front clip and adapted to swing into the bag-blank into substantially that position where each of the defining edges of the diamond fingers form substantially forty-five degrees with the central longitudinal median line of the bag-blank, substantially as described.

5. A folding-bed adapted to support one side of a paper-bag blank, the front clip mounted on that folding-bed, means for effectively closing the front clip to hold the leading end of the bag-blank, the oppositely-disposed hook-shaped diamond fingers mounted on the front clip, means for vibrating the diamond fingers and for swinging the same into the bag-blank into substantially such position that each of the defining edges forms substantially forty-five degrees with the central longitudinal median line of the bag-blank.

6. A folding-bed adapted to support one side of the paper-bag blank, the front clip mounted on that folding-bed, means for effectively closing the front clip, to hold the leading end of the bag-blank, the oppositely-disposed hook-shaped diamond fingers mounted on the front clip, means for vibrating the diamond fingers and for swinging the same into the bag-blank into substantially that position where each of the defining edges forms substantially forty-five degrees with the central longitudinal median line of the bag-blank; and means whereby those fingers may be adjusted laterally, and thereby adapting them to various sizes of bags.

7. The combination of the yoke-shaped front clip terminating in a comparatively narrow plate adapted to clasp the leading end of the bag-blank, means for vibrating the front clip, a pair of oppositely-disposed hook-shaped diamond fingers, mounted on the front-clip yoke, means for simultaneously vibrating those diamond fingers over the narrow portion of the front clip into the bag-blank into substantially such a position that the defining edges of those diamond fingers each form substantially forty-five degrees with the central longitudinal median line of the bag-blank, when in their operative position.

8. In a paper-bag machine, the combination of a conveyer, an oscillating carrier pivoted thereto, operating means to cause the same

to oscillate and means to hold the lower part of the tubular blank thereto, consisting of the side clips, the front clip, the diamond fingers mounted on the front clip, the tucker-plate trunnioned in uprights and provided with side nippers, operating means to cause the tucker-plate to vibrate, and means to close the nippers on the tucker-plate, all parts combined and operating to distend and unfold the tucked-paper tube and form the inside triangular folds while the carrier oscillates, the tucker-plate defining the primary transverse line across the blank and the diamond fingers forming the leading end of the diamond, the whole operating to convert the blank into the diamond form while the blank is carried onward by the conveyer, substantially as described.

9. In a paper-bag machine, the combination of a conveyer, the carrier pivotally mounted thereon, operating means to cause the same to be oscillated, the front clip, the oppositely-disposed hook-shaped diamond fingers, mounted on the front clip, the two oppositely-bevel-edged side clips arranged to hold the lower part of the tubular blank to the carrier, the tucker-plate trunnioned in the uprights, and provided with the side nippers, operating means to vibrate the tucker-plate, and operating means to cause the side nippers to swing down upon the tucker-plate and hold the upper part of the tubular blank, all parts combined and operating to distend and unfold the tubular blank to form the inside triangular folds and the leading end of the diamond form by the diamond fingers while the tucker-plate defines the primary transverse folding-line across the blank, the whole operating to convert the tucked-paper tube into the diamond form, while the same is carried onward by the conveyer, substantially as described.

10. In a paper-bag machine, the combination of the cylinder provided with the mutilations, the carrier pivotally mounted on the cylinder, means for imparting thereto an oscillatory motion, a front clip, the oppositely-disposed hook-shaped diamond fingers mounted on the front clip, the two oppositely-disposed bevel-edged side clips, the tucker-plate trunnioned in the uprights and provided with bevel-edged side nippers, operating means to vibrate the tucker-plate so that the folding edge travels with the combined movement of the cylinder and the carrier, and while the diamond fingers are in their inner position of adjustment, and while the defining edge of the tucker-plate defines the primary transverse folding-line, substantially as described.

11. In a paper-bag machine, the combination of a folding-bed, devices to hold the lower plies of a tucked-paper tube to that folding-bed, the tucker-plate coöperating with that folding-bed, devices to hold the upper plies of the tucked-paper tube to the tucker-plate, the vibrating ironing-plate to press the folded diamond into its final proportions upon the folding-bed and the tucker-plate, substantially as described.

12. A folding-bed adapted to support a paper-bag blank, a folding mechanism adapted to turn over the rear flap, consisting of the finger 143 adapted to be thrust laterally across the folding-bed back of the rear flap and also adapted to be oscillated over the top surface of the folding-bed, and at a rate faster than the rotation of the cylinder, for the purpose of turning over the rear flap upon the bag-bottom, substantially as described.

13. A folding-bed adapted to support a paper-bag blank, a folding mechanism adapted to turn over the rear flap, consisting of the finger 143 adapted to be thrust laterally across the folding-bed back of the rear flap, and also adapted to be oscillated over the top surface of the folding-bed, the retainers 180 adapted to be thrust over the bag-bottom ahead of the flap, all combined and operating substantially as described.

14. A folding-bed adapted to support a paper-bag blank, a folding mechanism adapted to turn over the rear flap, consisting of the finger 143, actuating mechanism whereby the finger is thrust laterally across the folding-bed behind the rear flap, means for oscillating the finger over the top surface of the folding-bed, the retainers 180, means for actuating the retainers, consisting of the stationary cams 182 and 183, all combined and operating in such a manner that the finger 143 is thrust behind the rear flap, and then effectively turns that flap over upon the bottom of the bag against the retainers, substantially as described.

15. The combination of the arm 134, the finger 143 supported in the arm, the sector-pinion 136, the sector 137, the cam 142, the bifurcated arm 145, the rod 149, the arm 150 and the cam 154, all combined and operating to thrust the finger laterally across the folding-bed behind the rear flap, and then cause the same to be oscillated over the top surface of the carriers, substantially as described.

EDWARD E. CLAUSSEN.
GEORGE MORTSON.

Witnesses:
HENRY D. MILDEBERGER,
JANETTE L. ELLSWORTH.

CLERK'S CERTIFICATE.

UNITED STATES OF AMERICA,
DISTRICT OF MAINE, ss.

I, James E. Hewey, Clerk of the Circuit Court of the United States for the District of Maine, hereby certify that the seven volumes, entitled as follows:

Volume I., Complainant's Record, Prima Facie Proofs;

Volume II., Complainant's Record, Answering Proofs;

Volume III., Complainant's Record, Exhibit Book;

Volume IV., Defendant's Record, Continental Record, Volume I., Answer and Evidence;

Volume V., Defendant's Record, Continental Record, Volume II., U. S. Patents;

Volume VI., Defendant's Record, Continental Record, Volume III., Exhibits;

Volume VII., Proceedings in Circuit Court;

this certificate being attached to each of said volumes, contain and are a true copy of the record and all proceedings of said Circuit Court in the cause in equity entitled,

No. 546.

EASTERN PAPER BAG COMPANY, COMPLAINANT,

v.

CONTINENTAL PAPER BAG COMPANY, DEFENDANT,

in said Circuit Court determined, the Petition for Appeal, Assignment of Errors, Supersedeas Bond on Appeal, Bond on Appeal, Opinion of the Circuit Court, and also the original Citation with acknowledgment of service thereon.

Witness my hand and the seal of said Circuit Court this thirty-first day of January, A.D. 1906.

[SEAL] JAMES E. HEWEY, *Clerk.*